Hamilton County - Paycor Stadium South Scoreboard Facade - BP#5 Project

ITB#078-26

PROJECT MANUAL

Hamilton County
OHIO

Phil Beck
138 E. Court Street, Room 607
Cincinnati, Ohio 45202

PROJECT MANUAL

HAMILTON COUNTY
ITB#078-26
PAYCOR STADIUM SOUTH SCOREBOARD FACADE – BP#5 PROJECT

THE BOARD OF COUNTY COMMISSIONERS

STEPHANIE SUMMEROW DUMAS, PRESIDENT
ALICIA REECE, VICE PRESIDENT
DENISE DRIEHAUS

JEFFREY ALUOTTO, COUNTY ADMINISTRATOR

OCTOBER 2026

DIVISION 00 – GENERAL PROJECT REQUIREMENTS
SECTION 00 01 10
INDEX TO PROJECT MANUAL

NOTICE:
This Project Manual, an unpublished instrument of service of the authors, is for use on this Project only and is prepared for use in conjunction with the authors' interpretations, observations, decisions, and administration as described in the General Conditions, without which desired results are unlikely. Use in part or in whole for other purposes without the authors' expressed written consent may violate Act 17, United States Code, paragraph 301, 1991. Copyright 2013, KZF Design.

DIVISION 00 – GENERAL PROJECT REQUIREMENTS

INTRODUCTORY PAGES

00 01 10	Index To Project Manual	10/13/26
00 01 15	Drawing Index	10/13/26
00 01 25	Project Directory	10/13/26

BIDDING REQUIREMENTS, CONTRACT FORMS, AND CONDITIONS OF THE CONTRACT

00 05 00	Legal Advertisement Packet	10/13/26
00 10 00.00	Bidding Documents	10/13/26
00 10 00.01	Advertisement For Bids (Legal Notice)	10/13/26
00 10 00.02	Instructions To Bidders – AIA A701	10/13/26
00 10 00.03	Additional Bid Conditions	10/13/26
00 10 00.04	Bid Form	10/13/26
00 10 00.05	Bid Guaranty and Contract Bond	10/13/26
00 10 00.06	Certificate Of Compliance, Ohio Department of Insurance – Hamilton County	10/13/26
00 10 00.07	Non-Collusion Affidavit of Contractor	10/13/26
00 10 00.08	Bidder's Certification Concerning Equal Employment Opportunity Requirements	10/13/26
00 10 00.09	Personal Property Tax Statement	10/13/26
00 10 00.10	Subcontractor And Material Supplier List	10/13/26
00 10 00.11	Hamilton County MBE/WBE/SBE Program Summary	10/13/26
00 10 00.12	Goal Compliance Plan (Appendix B. 1)	10/13/26
00 10 00.13	Application For Program Waiver (Appendix B. 2)	10/13/26
00 10 00.14	Letter Of Intent (LOI) Between Prime Contractor and Contractor / Supplier (Appendix B.3)	10/13/26
00 10 00.15	Warranty Against an Unresolved Finding for Recovery	10/13/26
00 10 00.16	Prime Contractor Substitution Request Form (Appendix B. 4)	10/13/26
00 10 00.17	Responsible Bidder Certification	10/13/26
00 10 00.18	Tax Statement Sheet	10/13/26
00 10 00.19	Not Used	10/13/26
00 10 00.20	Not Used	10/13/26
00 10 00.21	Certified Check Form	10/13/26
00 10 00.22	Registration Form	10/13/26
00 10 00.23	Prevailing Wages and Prevailing Wage Rate Tables (See Appendix A)	10/13/26
00 50 00	Agreement Form - AIA A132	10/13/26
00 61 00	Contract Bond	10/13/26
00 61 50	Escrow Agreement	10/13/26
00 72 00	General Conditions - AIA A232	10/13/26

00 73 19	Health And Safety Requirements	10/13/26
00 73 19a	Safety, Health, And Environmental Requirements	10/13/26
00 82 70	Responsible Bidder Requirements	
00 90 00	Contract Forms	10/13/26
		10/13/26

DIVISION 01 – GENERAL CONDITIONS

01 11 00	Summary	10/13/26
01 21 00	Allowances	10/13/26
01 22 00	Unit Prices	10/13/26
01 23 00	Alternates	10/13/26
01 25 13	Product substitution Procedures	10/13/26
01 26 00	Contract Modification Procedures	10/13/26
01 31 19	Project Meetings	10/13/26
01 32 16	Construction Progress Scheduling	10/13/26
01 32 26	Construction Progress Reporting	10/13/26
01 33 00	Submittal Procedures	10/13/26
01 33 23	Shop Drawings, Product Data, And Samples	10/13/26
01 35 43	Environmental Procedures – 5S Program	10/13/26
01 40 00	Quality Requirements	10/13/26
01 40 01	Quality Program	10/13/26
01 42 00	References	10/13/26
01 42 16	Definitions, Standards, And Regulatory Req.	10/13/26
01 45 16	Ground Penetration Requirements	10/13/26
01 50 00	Temporary Facilities and Controls	10/13/26
01 73 00	Execution	10/13/26
01 77 00	Closeout Procedures	10/13/26
01 78 23	Operation And Maintenance Data	10/13/26
01 78 39	Project Record Documents	10/13/26

DIVISION 05 – METALS

05 55 00	Metal Fabrications	10/13/26

DIVISION 07 – THERMAL AND MOISTURE PROTECTION

07 42 13.15	Formed Perforated Metal Wall Panels	10/13/26

END OF DOCUMENT

DIVISION 00 – GENERAL PROJECT REQUIREMENTS
SECTION 00 01 15
DRAWING INDEX

GENERAL

G-000	COVER SHEET	10/13/26

ARCHITECTURE

A-001	SYMBOLS & ABBREVIATIONS	10/13/26
A-101	SOUTH SCOREBOARD FAÇADE PLAN	10/13/26
A-102	SOUTH SCOREBOARD FAÇADE PLAN	10/13/26
A-103	SOUTH SCOREBOARD FAÇADE PLAN	10/13/26
A-104	SOUTH SCOREBOARD FAÇADE PLAN	10/13/26
A-105	SOUTH SCOREBOARD FAÇADE PLAN	10/13/26
A-106	SOUTH SCOREBOARD FAÇADE PLAN	10/13/26
A-121	SOUTH SCOREBOARD FAÇADE PLAN DETAILS	10/13/26
A-201.1	SOUTH SCOREBOARD FAÇADE ELEVATIONS	10/13/26
A-201.2	SOUTH SCOREBOARD FAÇADE ELEVATIONS	10/13/26
A-201.3	SOUTH SCOREBOARD FAÇADE ELEVATIONS	10/13/26
A-202	SOUTH SCOREBOARD FAÇADE ELEVATIONS	10/13/26
A-203	SOUTH SCOREBOARD FAÇADE RENDERINGS	10/13/26
A-300	SOUTH SCOREBOARD FAÇADE ASSEMBLY DIAGRAM	10/13/26
A-301	SOUTH SCOREBOARD SECTION	10/13/26
A-310	BLADE ASSEMBLY DETAILS	10/13/26
A-311	TAPERED BLADE PLATE PROFILES	10/13/26
A-312	FAÇADE PANEL AND BLADE DETAILS	10/13/26
A-901	PERFORATED PANEL MOCKUP	10/13/26

END OF DOCUMENT

DIVISION 00 – GENERAL PROJECT REQUIREMENTS
SECTION 00 01 25
PROJECT DIRECTORY

OWNER
Hamilton County
Department of Stadia and Parking
1 Paycor Stadium
Cincinnati, Ohio 45202

CONSTRUCTION MANAGER
Messer Construction
643 West Court Street
Cincinnati, Ohio 45203
Phone: 513-242-1541

STRUCTURAL ENGINEER
THP Limited, Inc.
221 East Fourth Street, Suite 1150
Cincinnati, Ohio 45202
Phone: 513-241-3222

OPERATOR
Paul Brown Stadium Limited
1 Paycor Stadium
Cincinnati, Ohio 45202

ARCHITECT
KZF Design
700 Broadway
Cincinnati, Ohio 45202
Phone: 513-864-8682

MEP ENGINEER
Davies Engineering Group
3960 Red Bank Road, Suite
250 Cincinnati, Ohio 45227
Phone: 513-561-2271

END OF DOCUMENT

HAMILTON COUNTY PURCHASING DEPARTMENT

Purchasing Department
138 East Court Street, Room 507
Cincinnati, Ohio 45202
Phone: (513) 946-4355
purchasing@hamiltoncountyohio.gov
http://www.hamilton-co.org/purchasing/

County Administrator:
Jeffrey Aluotto

Director of Purchasing:
Jill Williams

Board of County Commissioners:
Stephanie Summerow Dumas, President
Alicia Reece, Vice President
Denise Driehaus

DATE OF ISSUANCE: **10/13/2026**

INVITATION TO BID (ITB) NUMBER: **ITB#078-26**

INVITATION TO BID (ITB) NAME: **Paycor Stadium South Scoreboard Facade– BP#5 Project**

Date of Virtual Pre-Bid Conference: **Microsoft Teams meeting Join:** https://teams.microsoft.com/meet/288808821149402?p=CX5cfgiO2Zi07T3rvz Meeting ID: 288 808 821 149 402 Passcode: UK2JM6kR	**10/20/2026 at TIME**; Virtual at **11:00 AM EDT**
Deadline for Receiving Final ITB - Questions:	**10/28/2026 12:00 PM EDT**
Deadline for Receiving Final ITB - Answers:	**10/30/2026 11:00 AM EDT**
BID OPENING DATE: Hamilton County Purchasing Department, 138 East Court Street, Room 507	**11/04/2026 11:00 AM EST**
Small Business Participation Requirement: **Minority-Owned Business Participation Requirement:** **Women-Owned Business Participation Requirement:**	**20%** **16.5%** **4.2%**
This is a Prevailing Wage Project, the Budget is:	**$6,000,000**

Sealed proposals will be received at the Hamilton County Purchasing Department, Room 507, 138 East Court Street, Cincinnati, Ohio 45202, until 11:00 AM on the date listed above and will be read at that time. **Bid opening will be held in Conference Room.** Proposal forms, specifications, etc. may be obtained upon application at ARC (American Reprographics Co) Office, 4219 Malsbary Road, Blue Ash, OH 45242, Phone: 513-326-2300, or they may be electronically retrieved by accessing the following web site: **http://www.hamilton-co.org/purchasing/.**

THE BID BOND FOR THIS PREVAILING WAGE PROJECT IS:

A surety in the form of a cashier's check drawn on a solvent financial institution, and made payable to the BOARD OF COUNTY COMMISSIONERS, in the amount of 10% (Ten Percent) of the total amount of the bid including any alternates, or a bond in the amount of 100% (One Hundred Percent) of the total amount of the bid including any alternates must accompany each proposal as a guarantee that if the proposal is accepted, a contract will be entered into. The surety must be submitted with the bid.

Use the bid guaranty and contract bond in accordance with ORC 153.571 as specified.

Failure to submit the bid bond with the bid will result in disqualification of the bid.

THE PERFORMANCE BOND FOR THIS PREVAILING WAGE PROJECT IS:

The successful Bidder will be required to furnish a corporate surety bond, made payable to the Board of County Commissioners, Hamilton County, for one hundred percent (100%) of the total amount of the contract price as a guarantee for the faithful performance thereof.

The submitted bond must be issued by a company licensed to conduct business in the State of Ohio.

DEPARTMENT INFORMATION

Department Name:	Hamilton County, Phil Beck
Street Address:	138 E. Court Street, Room 607
City:	Cincinnati
State:	Ohio
Zip Code:	45202

In its efforts to promote participation of all businesses in Hamilton County projects, it is the policy of the Hamilton County Board of Commissioners that Hamilton County is an equal business opportunity governmental entity, and has always provided and will continue to provide, equal business opportunities in accordance with this policy.

REGISTRATION FORM
PLEASE READ AND ACKNOWLEDGE RECEIPT OF THIS DOCUMENT

ITB#:078-26 –Paycor Stadium South Scoreboard Facade – BP#5 Project– GR

All inquiries regarding this ITB are to be e-mailed or mailed to:
Gina Richmond
138 E. Court Street, Room 507
Cincinnati, Ohio 45202
Email: Purchasing@hamiltoncountyohio.gov

The County will not entertain any oral questions regarding this ITB/RFP. Other than specified above, no bidder may contact any county official, employee, project team member or evaluation team member. Bidders are not to schedule appointments or have contact with any of the individuals connected to or having decision-making authority regarding the award of this ITB/RFP. **Inappropriate contact including attempts to influence the ITB/RFP process, evaluation process or the award process by bidders or by others on their behalf will result in bid/proposal rejection.**

The only appropriate contact is with the Purchasing Department as listed above.

Have you been banned from doing business with the State of Ohio? _____

Is your company a Small/Minority/Women Owned Business? _____
If yes, please specify any certifications:

_____

Please e-mail this page to the Purchasing Department as soon as possible.

By e-mailing this page to the Purchasing Department, you will be registering your company's interest in this ITB/RFP, attendance at pre-bid conference, and it will ensure you will receive all addenda or correspondence. Your signature is an acknowledgement that you have read and understand the information contained on this page. Hamilton County will not be responsible for the timeliness of the delivery via U.S. Mail

DATE:	
COMPANY NAME:	
ADDRESS:	
CITY, STATE & ZIP CODE:	
SALES REPRESENTATIVE'S NAME:	
TELEPHONE NUMBER:	
EMAIL ADDRESS:	
NUMBER OF PEOPLE ATTENDING PREBID (IF APPLICABLE):	
SIGNATURE:	

GENERAL CONDITIONS AND INSTRUCTIONS TO BIDDERS

1. The Board of County Commissioners reserves the right to reject any or all bids and, unless otherwise specified by the bidder, to accept any item in the bid. In case of error in extending the total amount of the bid, the unit price will govern.

2. Hamilton County, Ohio (the "County") is an equal business opportunity governmental entity and recognizes that minority, women and small businesses contribute to employment and economic growth in our region. County encourages the participation of such businesses on County projects.

3. ***(If applicable)*** The overall annual goals for Minority-owned businesses is 16%, Women-owned businesses is 13% and Small Business is 20% (all as defined in the Hamilton County Minority, Women, and Small Business Enterprise Program packet, attached hereto and incorporated herein by reference ("MBE, WBE, SBE Program"). However, contract-specific goals will vary depending on the individual contract specifications as further detailed in the MBE, WBE, SBE Program. Bidder shall comply with all terms and conditions specified in the MBE, WBE, SBE Program, and the terms and conditions of such MBE, WBE, SBE Program will be incorporated into any resultant contract.

4. The County will make the final payment when the materials, supplies, equipment, or the work performed has been fully delivered or completed to the full satisfaction of the Board of County Commissioners.

5. In case of default by the bidder or contractor, the Board of County Commissioners may procure the articles or services from other sources and hold the bidder or contractor responsible for any excess costs occasioned thereby.

6. Prices must be stated in units or quantities specified.

7. Whenever a reference is made in the specifications or in describing the materials, supplies, or services required, of a particular trade name or manufacturer's catalog or model number, the bidder, if awarded the contract, will be required to furnish the particular item referred to in strict accordance with the specifications and descriptions **UNLESS** a departure or substitution is clearly noted and described in the proposal by the bidder and accepted by the county.

8. The bidder, if awarded a contract or order, agrees to protect, defend, and hold harmless the Board of County Commissioners against any demand for payment for the use of any patented material, process, article, or device that may enter into the manufacture, construction, or from a part of the work covered by either order or contract. He/she further agrees to indemnify and hold harmless the Board of County Commissioners from suits or actions of every nature and description brought against it for or on account of any injuries or damages received or sustained by any party or parties by or from any acts of the contractor, his/her servants or agents. To this extent,

the bidder or contractor agrees to furnish adequate Public Liability and Property Damage Insurance, the amount of which will be determined by the Board of County Commissioners wherever such insurance, in the opinion of the Board, is deemed necessary.

9. It is agreed that the bid shall be irrevocable for a period of sixty days (60) after it is opened by the Purchasing Department, and if accepted, the bidder will, within five days (5) after receiving notice of acceptance of said bid, enter into a contract in writing for the said material, supplies, or services required, with a surety to the satisfaction of the Board of County Commissioners, faithfully to perform said contract according to its terms and according to said specifications, and that bidder will promptly pay all damages and expenses occurring to said Board of County Commissioners by reason of the failure or refusal of the bidder to enter into said contract. Use the bid guaranty and contract bond in accordance with ORC 153.571 as specified.

   The Board of County Commissioners will treat all bidders alike in every respect, and they will take final action on this and all other bids no later than sixty days (60) after this and all other bids are opened aforesaid.

   No bid shall be considered as accepted, nor any obligation assumed hereunder by the Board of County Commissioners, until such time as said Board of County Commissioners may deposit in the U.S. Mail written notice, addressed to the successful bidder or bidders at the address give on the bid of acceptance of the bid or award of a contract.

10. Samples, when requested, are returned at the bidder's expense.

11. Proposals, to receive consideration, MUST BE RECEIVED prior to the specified time of opening and reading as designated in the invitation.

12. Bidders are required to use the proposal form furnished by the Purchasing Department when submitting their proposals. Envelopes must be sealed when submitted and the ITB # prominently written/displayed on the outside of the envelope/packages.

13. Proposals having erasures or corrections thereon will be rejected unless explained or noted over the signature of the bidder.

14. Bidders may submit proposals on any one or group of items provided, however, the unit price is shown as requested.

15. References in the specifications or in describing the materials, supplies, or services required, of a particular trade name, manufacturer's catalog or model number, are made for descriptive purposes to guide in interpreting the type of materials, supplies, or of performing the work in a manner other than specified. However, the bidder's attention is called to Item 7 as previously stated, which condition must be strictly adhered to.

16. Concealed weapons, whether with or without a permit, are not allowed in any Hamilton County Building. ORC states that "Unless otherwise authorized by law, pursuant to the Ohio Revised Code, no person shall knowingly possess, have under the person's control, convey, or attempt to convey a deadly weapon or dangerous ordnance onto these premises."

17. The bid tabulation that is entered in the system is a preliminary summary of the bids as they were opened and announced at the bid opening. Bid prices have not been verified and are subject too change in the event mathematical errors are discovered during bid review. Other information contained in this summary is also subject to review. The awarded bid tabulation will be the final version of the bid results.

TAXES

OHIO SALES TAX:	Not applicable to County purchases.
FEDERAL EXCISE TAX:	Not applicable to purchases for essential government functions.

PROPOSAL OR BID

In compliance with the foregoing invitations for bids, and subject to all conditions set forth, the undersigned offers and agrees, after having carefully examined the specifications, if this bid is accepted within a reasonable time from the date of the opening, to furnish any or all of the items upon which prices are quoted, in accordance with the specifications applying, at the price set opposite each item.

The Legal Advertisement, General Conditions, Special Conditions, Instructions to Bidders, and Specifications and Plans become a part of this proposal.

TAXES: Ohio Sales Taxes are not applicable to Hamilton County purchases.

TAX ID #:_____

PRINT NAME: _____

SIGNATURE: _____

TITLE: _____

NAME OF COMPANY: _____

NOTE: Your attention is called to the fact that a bond or certified check must accompany this proposal if so specified in the "INVITATION".

HAVE YOU PROPERLY SIGNED YOUR BID AND BOND?

_____
DATED

_____
ADDRESS

_____

_____
PHONE NUMBER

1. BIDDING DOCUMENTS

October 8, 2026

Legal Advertisement Dept.
Cincinnati Court Index Press

Please insert the following "INVITATION TO BID" in the **Court Index Press** on **October 13, 2026.**

Sealed proposals will be received at the Hamilton County Purchasing Department, 138 East Court St., (Room 507) Cincinnati, OH 45202, until 11:00AM on **November 4, 2026,** and will be read at that time for **ITB# 078-26 – Hamilton County South Score Board Facade.**

A Microsoft Teams Virtual Pre-Bid Conference will be held on **October 20, 2026, at 11:00 a.m.** To join the meeting, please contact purchasing@hamiltoncountyohio.gov.

This is a prevailing wage project, and the estimated budget is **$6,000,000**. Proposal forms, specifications, etc. may be obtained upon application at the ARC, 4219 Malsbury Road, Cincinnati, Ohio 45242 or they may be electronically retrieved by accessing the following web site – http://www.hamilton-co.org/purchasing/.

After publication, please send affidavit and invoice to the Hamilton County Purchasing Department at the above address.

Sincerely yours,

Jill Williams

Jill Williams
Purchasing Director

Document 001000.2

Instructions to Bidders

Part 1 General

1.1 SUMMARY

A. AIA Document A701, Instructions to Bidders, 1997 Edition, Articles 1 through 9, as amended and modified is a part of the Bidding Documents. A copy of this document is attached.

AIA® Document A701® – 2018

Instructions to Bidders

for the following Project:
(Name, location, and detailed description)

Hamilton County Paycor Stadium
South Scoreboard Façade Project
ITB #078-26
1 Paycor Stadium
Cincinnati, Ohio 45202

THE OWNER:
(Name, legal status, address, and other information)

Board of County Commissioners,
Hamilton County, Ohio
603 County Administration Building
138 East Court Street
Cincinnati, Ohio 45202

THE ARCHITECT:
(Name, legal status, address, and other information)

KZF Design, Inc.
700 Broadway
Cincinnati, Ohio 45202

THE CONSTRUCTION MANAGER:
(Name, legal status, address, and other information)

Messer Construction Co.
643 West Court Street
Cincinnati, Ohio 45203

ADDITIONS AND DELETIONS:
The author of this document may have revised the text of the original AIA standard form. An *Additions and Deletions Report* that notes revisions to the standard form text is available from the author and should be reviewed. A vertical line in the left margin of this document indicates where the author has added to or deleted from the original AIA text.

This document has important legal consequences. Consultation with an attorney is encouraged with respect to its completion or modification.

FEDERAL, STATE, AND LOCAL LAWS MAY IMPOSE REQUIREMENTS ON PUBLIC PROCUREMENT CONTRACTS. CONSULT LOCAL AUTHORITIES OR AN ATTORNEY TO VERIFY REQUIREMENTS APPLICABLE TO THIS PROCUREMENT BEFORE COMPLETING THIS FORM.
It is intended that AIA Document G612™–2017, Owner's Instructions to the Architect, Parts A and B will be completed prior to using this document.

AIA Document A701 – 2018. Copyright © 1970, 1974, 1978, 1987, 1997 and 2018. All rights reserved. "The American Institute of Architects," "American Institute of Architects," "AIA," the AIA Logo, and "AIA Contract Documents" are trademarks of The American Institute of Architects. This document was produced at 12:16:15 EDT on 10/02/2026 under Subscription No.20250121573 which expires on 04/24/2027, is not for resale, is licensed for one-time use only, and may only be used in accordance with the AIA Contract Documents® Terms of Service. To report copyright violations, e-mail docinfo@aiacontracts.com.
User Notes: (6abfd7bae108b0eed1c1b077)

TABLE OF ARTICLES

1 DEFINITIONS

2 BIDDER'S WARRANTIES AND REPRESENTATIONS

3 BIDDING DOCUMENTS

4 BIDDING PROCEDURES

5 CONSIDERATION OF BIDS

6 POST-BID INFORMATION

7 BID GUARANTY AND PERFORMANCE BOND REQUIREMENTS

8 FORM OF AGREEMENT BETWEEN OWNER AND CONTRACTOR

9 ADDITIONAL REQUIREMENTS

AIA Document A701 – 2018. Copyright © 1970, 1974, 1978, 1987, 1997 and 2018. All rights reserved. "The American Institute of Architects," "American Institute of Architects," "AIA," the AIA Logo, and "AIA Contract Documents" are trademarks of The American Institute of Architects. This document was produced at 12:16:15 EDT on 10/02/2026 under Subscription No.20250121573 which expires on 04/24/2027, is not for resale, is licensed for one-time use only, and may only be used in accordance with the AIA Contract Documents® Terms of Service. To report copyright violations, e-mail docinfo@aiacontracts.com.
User Notes: (6abfd7bae108b0eed1c1b077)

ARTICLE 1 DEFINITIONS

§ 1.1 "Bidding Documents" include the Bidding Requirements and the Contract Documents. The Bidding Requirements consist of the Advertisement to Bid or Invitation to Bid, Instructions to Bidders, as amended, the Bid form, the Minority, Women and Small Business Program and any other sample bidding and contract forms. The "Contract Documents" consist of the form of Agreement between the Owner and Contractor, as amended, and that Agreement's Exhibits, Conditions of the Contract (General, Supplementary and other Conditions), Drawings, Specifications, all Addenda, and all other documents enumerated in Article 1 of the Agreement.

§ 1.2 Definitions set forth in the General Conditions of the Contract for Construction and in other Contract Documents apply to the Bidding Documents.

§ 1.3 An "Addendum" or "Addenda" are written or graphic instruments issued by the Architect or Construction Manager prior to the execution of the Agreement, which, by additions, deletions, clarifications, or corrections, modify or interpret the Bidding Documents.

§ 1.4 A "Bid" is a complete and properly executed proposal to do the Work for the sums stipulated therein, submitted in accordance with the Bidding Documents. The word "Proposal" is used interchangeably with the word "Bid."

§ 1.5 The "Base Bid" is the sum stated in the Bid for which the Bidder offers to perform the Work described in the Bidding Documents as the base, to which Work may be added or deleted by sums stated in Alternate Bids.

§ 1.6 An "Alternate Bid" (or "Alternate") is an amount stated in the Bid to be added to or deducted from, or that does not change, the Base Bid if the corresponding change in the Work, as described in the Bidding Documents, is accepted.

§ 1.7 A "Unit Price" is an amount stated in the Bid as a price per unit of measurement for materials, equipment, or services, or a portion of the Work, as described in the Bidding Documents.

§ 1.8 A "Bidder" is a person or entity who submits a Bid and who meets the requirements set forth in the Bidding Documents.

§ 1.9 A "Median Bid" shall be interpreted as the Bid where an equal number of all other Bids are higher and lower than said Bid. In the event of an even number of Bids, the Median Bid shall be the average of the two (2) Bids where an equal number of all other Bids are higher and lower than the two (2) said Bids.

ARTICLE 2 BIDDER'S WARRANTIES AND REPRESENTATIONS

§ 2.1 By submitting a Bid, the Bidder warrants and represents that:

- **.1** the Bidder has read and understands the Bidding Documents;
- **.2** the Bidder understands how the Bidding Documents relate to other portions of the Project, if any, being bid concurrently or presently under construction;
- **.3** the Bid complies with the Bidding Documents;
- **.4** the Bidder has visited the site, become familiar with local conditions under which the Work is to be performed, and has correlated the Bidder's observations with the requirements of the Bidding Documents;
  - **.1** A pre-bid meeting will be held as noted in the Advertisement to Bid. All Bidders are strongly encouraged to attend the pre-bid meeting, but attendance is not a mandatory prerequisite to bidding. However, all Bidders are required to visit the Site prior to the Bid date to thoroughly familiarize themselves with existing conditions affecting the Work.
  - **.2** The Bidder awarded the Contract will not be given extra payments for conditions that could have been determined by examining the site and Bidding Documents and/or attending the pre-bid meeting.

AIA Document A701 – 2018. Copyright © 1970, 1974, 1978, 1987, 1997 and 2018. All rights reserved. "The American Institute of Architects," "American Institute of Architects," "AIA," the AIA Logo, and "AIA Contract Documents" are trademarks of The American Institute of Architects. This document was produced at 12:16:15 EDT on 10/02/2026 under Subscription No.20250121573 which expires on 04/24/2027, is not for resale, is licensed for one-time use only, and may only be used in accordance with the AIA Contract Documents® Terms of Service. To report copyright violations, e-mail docinfo@aiacontracts.com.
User Notes: (6abfd7bae108b0eed1c1b077)

.5 the Bid is based upon the materials, equipment, and systems required by the Bidding Documents without exception;

.6 the Bid does not include any fees or expenses for Bidder's or Bidder's subcontractors' General Liability and Excess Liability insurance for on-site exposures on the Project;

.7 except as otherwise set forth in **§ 4.4,** the Bid is irrevocable for the period of sixty (60) days after conclusion of the bid opening procedures; and

.8 the Bidder has read and understands the provisions for liquidated damages, if any, set forth in the Bidding Documents.

§ 2.2 Bid Preparation Costs

§ 2.2.1 Any and all cost associated with the preparation and submittal of the Bid shall be the sole responsibility of the Bidder. The Bidder must certify that the Bid and pricing will remain in effect for the duration specified. All materials submitted in response to the Invitation to Bid will become the property of Owner and may be returned only at Owner's option and at Bidder's expense.

ARTICLE 3 BIDDING DOCUMENTS

§ 3.1 Distribution

§ 3.1.1 Bidder must refer to the Advertisement to Bid for procedures to acquire Bidding Documents.

§ 3.1.2 Bidding Documents will be issued to anyone registering their interest in the process.

§ 3.1.3 Bidders shall use complete Bidding Documents in preparing Bids. Neither the Owner, the Construction Manager nor the Architect assumes responsibility for errors or misinterpretations resulting from the use of incomplete Bidding Documents.

§ 3.1.4 The Bidding Documents will be available for the sole purpose of obtaining Bids on the Work. No license or grant of use is conferred by distribution of the Bidding Documents.

§ 3.2 Modification or Interpretation of Bidding Documents

§ 3.2.1 The Bidder shall carefully study and compare the various Bidding Documents, shall compare the Bidding Documents with other work being bid concurrently or presently under construction to the extent it relates to the Work for which the Bid is submitted, shall examine the site and local conditions, and shall immediately notify the Architect or Construction Manager of errors, omissions, inconsistencies, or ambiguities discovered and request clarification or interpretation pursuant to **§ 3.2.2**.

§ 3.2.2 Requests for clarification or interpretation of the Bidding Documents shall be submitted by the Bidder in writing and shall be received by the Architect and Construction Manager through the Hamilton County, Ohio Purchasing Department on or before the deadline set forth in the Invitation to Bid.

§ 3.2.2.1 Bidders shall submit all requests for clarification and interpretation of the Bidding Documents via email to: purchasing@hamiltoncountyohio.gov. Bidders must include the Project Name and ITB number on its written request. Owner shall not entertain any oral communications regarding the Invitation to Bid or the Work, except as provided herein. No Bidder may contact any Owner representative, including County officials, employees, project team members, and evaluation team members, and no Bidder may schedule appointments or have contact with any of the individuals connected to or having decision-making authority regarding the award of the Contract, unless specifically authorized herein. Any inappropriate contact, including attempts to influence the Bidding process or Owner's consideration and evaluation of Bids, will result in rejection of the Bid.

§ 3.2.3 Modifications and interpretations of the Bidding Documents shall be made by Addendum. Modifications and interpretations of the Bidding Documents made in any other manner shall not be binding, and Bidders shall not rely upon them.

AIA Document A701 – 2018. Copyright © 1970, 1974, 1978, 1987, 1997 and 2018. All rights reserved. "The American Institute of Architects," "American Institute of Architects," "AIA," the AIA Logo, and "AIA Contract Documents" are trademarks of The American Institute of Architects. This document was produced at 12:16:15 EDT on 10/02/2026 under Subscription No.20250121573 which expires on 04/24/2027, is not for resale, is licensed for one-time use only, and may only be used in accordance with the AIA Contract Documents® Terms of Service. To report copyright violations, e-mail docinfo@aiacontracts.com.
User Notes: (6abfd7bae108b0eed1c1b077)

§ 3.3 Substitutions

§ 3.3.1 The materials, products, and equipment described in the Bidding Documents establish a standard of required function, dimension, appearance, and quality to be met by any proposed substitution. Bidder represents that the Bid amount set forth on its Bid form is based on the specified standards set forth in the Bidding Documents, including those set forth by Addenda.

§ 3.3.1.1 If certain brands of materials, products or equipment are specified as the basis of design, each Bid must be based on these brands or equivalent materials, products or equipment. The burden is on the Bidder to demonstrate to the satisfaction of the Architect that the materials, products or equipment is equivalent to the specifications.

§ 3.3.1.2 Any substitution for a specified brand must be submitted to the Architect in accordance with **§ 3.3.2**

§ 3.3.2 Substitution Process

§ 3.3.2.1 Written requests for substitutions shall be received by the Architect at least ten days prior to the date for receipt of Bids. Requests shall be submitted in the same manner as that established for submitting clarifications and interpretations in **§ 3.2.2**.

§ 3.3.2.2 Bidders shall submit substitution requests on a Substitution Request Form if one is provided in the Bidding Documents.

§ 3.3.2.3 If a Substitution Request Form is not provided, requests shall include (1) the name of the material or equipment specified in the Bidding Documents; (2) the reason for the requested substitution; (3) a complete description of the proposed substitution including the name of the material or equipment proposed as the substitute, performance and test data, and relevant drawings; and (4) any other information necessary or appropriate for an evaluation. The request shall include a statement setting forth changes in other materials, equipment, or other portions of the Work, including changes in the work of other contracts or the impact on any Project Certifications (such as LEED), that will result from incorporation of the proposed substitution.

§ 3.3.2.4 The burden of proof of the merit of the proposed substitution is upon the proposer. The Architect's decision of approval or disapproval of a proposed substitution shall be final.

§ 3.3.2.5 If the Architect approves a proposed substitution prior to receipt of Bids, such approval shall be set forth in an Addendum. Approvals made in any other manner shall not be binding, and Bidders shall not rely upon them.

§ 3.3.2.5.1 Alternatively, if the Bidder wishes to propose substitutions which have not been considered prior to submission of Bids, Bidder may list said substitution(s) on the Substitution Request Form included as a part of the Bidding Documents. The Substitution Request Form shall be submitted with a Bidder's Bid Form. Bidder shall clearly define the proposed substitution and indicate the difference in cost, if any, from its Base Bid indicated on the Bid Form. If no substitutions are proposed, Bidder shall state such on the Substitution Request Form. Proposed substitutions shall not be considered in the determination of the lowest and best Bid. The Architect's approval or disapproval of a proposed substitution shall be final. The Owner shall accept or reject the proposed substitution prior to execution of the Contract.

§ 3.3.2.6 No substitutions will be considered after the Contract award unless specifically provided for in the Bidding Documents.

§ 3.4 Addenda

§ 3.4.1 Any explanation, interpretation, correction or modification of the Bidding Documents will be issued in writing, in the form of an Addendum, which shall be the only means considered binding. All Addenda will become a part of the Bidding Documents. Addenda will be transmitted to Bidders known by the issuing office to have received complete Bidding Documents.

AIA Document A701 – 2018. Copyright © 1970, 1974, 1978, 1987, 1997 and 2018. All rights reserved. "The American Institute of Architects," "American Institute of Architects," "AIA," the AIA Logo, and "AIA Contract Documents" are trademarks of The American Institute of Architects. This document was produced at 12:16:15 EDT on 10/02/2026 under Subscription No.20250121573 which expires on 04/24/2027, is not for resale, is licensed for one-time use only, and may only be used in accordance with the AIA Contract Documents® Terms of Service. To report copyright violations, e-mail docinfo@aiacontracts.com.
User Notes: (6abfd7bae108b0eed1c1b077)

§ 3.4.1.1 The Owner shall transmit all Addenda to all registered Bidders via email. Bidders shall make certain it has provided Owner with its current email address. Additionally, all Addenda will be uploaded to ARC Document Solutions and the Owner's bid system.

§ 3.4.2 Addenda will be available where Bidding Documents are maintained for inspection purposes.

§ 3.4.3 If within seventy-two (72) hours prior to the published time for the opening of Bids, excluding Saturdays, Sundays, and legal holidays, the Owner seeks to issue an Addenda and mail or otherwise furnish to persons who have obtained the Bidding Documents any modification of the plans or specifications and estimated cost for the Project, the time for opening of Bids shall be extended one week, with no further advertising of Bids required.

§ 3.4.4 Prior to submitting a Bid, each Bidder shall ascertain that the Bidder has received all Addenda issued, and the Bidder shall acknowledge their receipt in the Bid.

ARTICLE 4 BIDDING PROCEDURES

§ 4.1 Preparation of Bids

§ 4.1.1 Bids shall be submitted on the forms included with or identified in the Bidding Documents.

§ 4.1.2 All blanks on the Bid form shall be legibly executed. Paper Bid forms shall be executed in a non-erasable medium.

§ 4.1.3 Sums shall be expressed in both words and numbers, unless noted otherwise on the Bid form. In case of discrepancy, the amount entered in words shall govern.

§ 4.1.4 Edits, interlineations or alterations to entries made on paper Bid forms must be initialed by the signer of the Bid.

§ 4.1.5 All requested Alternates shall be bid. If no change in the Base Bid is required, enter "No Change" or as required by the Bid form. Failure to bid an Alternate shall be cause of rejection of entire Bid only if said Alternate is accepted by Owner.

§ 4.1.6 Bidders may bid on more than one Bid item. Bidders submitting Bids on several Bid items must submit each separate Bid item in a separate sealed envelope in order to expedite the Bid opening and recording process.

§ 4.1.7 Each copy of the Bid shall state the legal name and legal status of the Bidder. As part of the documentation submitted with the Bid, the Bidder shall provide evidence of its legal authority to perform the Work in the jurisdiction where the Project is located. Each copy of the Bid shall be signed by the person or persons legally authorized to bind the Bidder to a contract. A Bid by a corporation shall further name the state of incorporation. A Bid submitted by an agent shall have a current power of attorney attached, certifying the agent's authority to bind the Bidder.

§ 4.1.8 A Bidder shall incur all costs associated with the preparation of its Bid.

§ 4.2 Bid Guaranty

§ 4.2.1 Each Bid shall be accompanied by the Bid Guaranty in the form and amount required in **Article 7** herein.

§ 4.2.2 The Bidder pledges to enter into a Contract with the Owner on the terms stated in the Bid and shall furnish bonds guaranteeing the Bidder's faithful performance of the Contract and payment of all obligations arising thereunder. Should the Bidder refuse to enter into such Contract or fail to furnish such bonds, the amount of the Bid Guaranty shall be forfeited to the Owner as liquidated damages, not as a penalty.

§ 4.2.3 The Owner will have the right to retain the Bid Guaranty of Bidders to whom an award is being considered until (a) the Contract has been executed and bonds have been furnished; (b) the specified time has elapsed so that Bids may be withdrawn; or (c) all Bids have been rejected.

AIA Document A701 – 2018. Copyright © 1970, 1974, 1978, 1987, 1997 and 2018. All rights reserved. "The American Institute of Architects," "American Institute of Architects," "AIA," the AIA Logo, and "AIA Contract Documents" are trademarks of The American Institute of Architects. This document was produced at 12:16:15 EDT on 10/02/2026 under Subscription No.20250121573 which expires on 04/24/2027, is not for resale, is licensed for one-time use only, and may only be used in accordance with the AIA Contract Documents® Terms of Service. To report copyright violations, e-mail docinfo@aiacontracts.com.
User Notes: (6abfd7bae108b0eed1c1b077)

§ 4.3 Submission of Bids

§ 4.3.1 A Bidder shall submit one (1) original paper copy of its Bid by mail or hand-delivered to the Hamilton County Purchasing Department, Room 507, County Administration Building, 138 East Court Street, Cincinnati, Ohio 45202. **The following documents, completed and signed as required, shall be submitted with the Bid:**

§.1 Bid Form;
§.2 As required by **Article 7**, the Bid Guaranty and Contract Bond for the full amount of the Bid (including Alternates) and which meets the requirements of this document and Ohio Revised Code §153.54(B); or a certified check, cashier's check, or an irrevocable letter of credit pursuant to Chapter 1305. of the Ohio Revised Code in the amount equal to ten percent (10%) of the Bid (including Alternates) and which meets the requirements of this document and Ohio Revised Code §153.54(C)(1);
§.3 A Certificate of Compliance from the State of Ohio Department of Insurance demonstrating the bonding agent is licensed to do business in the State of Ohio;
§.4 For Bid Guaranty and Contract Bond, submit credentials showing proper power of attorney for the attorney-of-fact of the Surety;
§.5 Non-Collusion Affidavit of Bidder;
§.6 Bidder's Certification Concerning Equal Employment Opportunity Requirements;
§.7 Warranty Against Unresolved Findings for Recovery;
§.8 Substitution Request Form;
§.9 Personal Property Tax Statement;
§.10 Bidder's MBE/WBE/SBE Goal Compliance Plan; and
§.11 Bidder's MBE/WBE/SBE Application for Program Waiver, as applicable.

Bids submitted without all of the above-listed documents, properly completed and signed as required, may be rejected as determined by the Owner, in its sole discretion.

§ 4.3.2 Paper copies of the Bid Form, the Bid Guaranty, and all other Bid documents described in **§ 4.3.1** shall be enclosed in a sealed opaque envelope. The envelope shall be addressed to the party receiving the Bids and shall be identified with the Project name and Bid Number, the Bidder's name and address, and, if applicable, the designated portion of the Work for which the Bid is submitted. If the Bid is sent by mail, the sealed envelope shall be enclosed in a separate mailing envelope with the notation "SEALED BID ENCLOSED" on the face thereof.

§ 4.3.3 Bids shall be submitted by the date and time and at the place indicated in the Invitation to Bid. Bids submitted after the date and time for receipt of Bids, or at an incorrect place, will not be accepted. . The time clock in the Hamilton County Purchasing Department's office will serve as the official timepiece of the date and time that sealed Bids are received; and will be the sole factor in determining if Bids are received in a timely manner in order to be considered.

§ 4.3.4 The Bidder shall assume full responsibility for timely delivery at the location designated for receipt of Bids.

§ 4.3.5 A Bid submitted by any method other than as provided in this **Section § 4.3** will not be accepted.

§ 4.4 Modification or Withdrawal of Bid

§ 4.4.1 Prior to the date and time designated for receipt of Bids, a Bidder may submit a new Bid to replace a Bid previously submitted, or withdraw its Bid entirely, by notice to the party designated to receive the Bids. Such notice shall be received and duly recorded by the receiving party on or before the date and time set for receipt of Bids. The receiving party shall verify that replaced or withdrawn Bids are removed from the other submitted Bids and not considered. Notice of submission of a replacement Bid or withdrawal of a Bid shall be worded so as not to reveal the amount of the original Bid.

§ 4.4.2 Withdrawn Bids may be resubmitted up to the date and time designated for the receipt of Bids in the same format as that established in **Section § 4.3**, provided they fully conform with these Instructions to Bidders. Bid security for the resubmitted Bid shall meet the requirements of **Article 7**.

AIA Document A701 – 2018. Copyright © 1970, 1974, 1978, 1987, 1997 and 2018. All rights reserved. "The American Institute of Architects," "American Institute of Architects," "AIA," the AIA Logo, and "AIA Contract Documents" are trademarks of The American Institute of Architects. This document was produced at 12:16:15 EDT on 10/02/2026 under Subscription No.20250121573 which expires on 04/24/2027, is not for resale, is licensed for one-time use only, and may only be used in accordance with the AIA Contract Documents® Terms of Service. To report copyright violations, e-mail docinfo@aiacontracts.com.
User Notes: (6abfd7bae108b0eed1c1b077)

§ 4.4.3 Except as otherwise provided in **Section § 4.4.4,** a Bid may not be modified, withdrawn or canceled by the Bidder at any time after the time and date designated for the receipt of Bids, and each Bidder so agrees in submitting a Bid

§ 4.4.4 Procedure for Withdrawal of Bid

§ 4.4.4.1 A Bidder may withdraw its Bid from consideration if the price bid was substantially lower than the other Bids, provided the Bid was submitted in good faith, and the reason for the price bid being substantially lower was a clerical mistake as opposed to a judgment mistake, and was actually due to an unintentional and substantial arithmetic error or an unintentional omission of a substantial quantity of work, labor, or material made directly in the compilation of the Bid. Notice of a claim of right to withdraw such Bid must be made in writing filed with the Owner within two (2) business days after the conclusion of the Bid opening procedure.

§ 4.4.4.2 No Bid may be withdrawn when the result would be the awarding of the contract on another Bid of the same Bidder.

§ 4.4.4.3 No Bidder who is permitted to withdraw a Bid shall for compensation supply any material or labor to, or perform any subcontract or other work agreement for, the person to whom the contract is awarded or otherwise benefit, directly or indirectly, from the performance of the Project for which the withdrawn Bid was submitted, without the approval of the Owner. The entity to whom the contract was awarded and the withdrawing Bidder are jointly liable to the Owner in an amount equal to any compensation paid to or for the benefit of the withdrawing Bidder without such approval, in addition to the penalty provided in §2913.31 of the Ohio Revised Code.

§ 4.4.4.4 If a Bid is withdrawn under authority of this **Section § 4.4**, the Owner may award the contract to the next lowest and best bidder or reject all Bids and resubmit the project for bidding. In the event the Owner resubmits the project for bidding, the withdrawing Bidder shall pay the costs, in connection with the resubmission, of printing new contract documents, required advertising, and printing and mailing notices to prospective Bidders, if the Owner finds that such costs would not have been incurred but for such withdrawal.

§ 4.4.4.5 The Owner, if it intends to contest the right of a Bidder to withdraw a Bid, shall hold a hearing thereon within ten (10) days after the opening of such Bids and issue any order allowing or denying the claim of such right within five (5) days after such hearing is concluded. The Owner shall give to the withdrawing Bidder timely and reasonable notice of the time and place of any such hearing. The Owner shall make a stenographic record of all testimony, other evidence, and rulings on the admissibility of evidence presented at the hearing. Such order may be appealed under §119.12 of the Ohio Revised Code. The Bidder shall pay the costs of the hearing.

§ 4.4.4.6 In the event the Owner denies the claim for withdrawal and the Bidder elects to appeal or otherwise refuses to perform, the Owner may reject all Bids or award to the next lowest and best Bidder.

ARTICLE 5 CONSIDERATION OF BIDS

§ 5.1 Opening of Bids

The Bid for which the award is to be made shall be opened at the time and place named in the Advertisement to Bid or Invitation to Bid, unless extended by the Owner or its representative or unless, within seventy-two (72) hours prior to the published time for the opening of Bids, excluding Saturdays, Sundays, and legal holidays, any modification of the Bidding Documents for the Project for which Bids are solicited is issued and mailed or otherwise furnished to persons who have obtained Bidding Documents for the Project, for which the time for opening of Bids shall be extended one week, with no further advertising of Bids required.

AIA Document A701 – 2018. Copyright © 1970, 1974, 1978, 1987, 1997 and 2018. All rights reserved. "The American Institute of Architects," "American Institute of Architects," "AIA," the AIA Logo, and "AIA Contract Documents" are trademarks of The American Institute of Architects. This document was produced at 12:16:15 EDT on 10/02/2026 under Subscription No.20250121573 which expires on 04/24/2027, is not for resale, is licensed for one-time use only, and may only be used in accordance with the AIA Contract Documents® Terms of Service. To report copyright violations, e-mail docinfo@aiacontracts.com.
User Notes: (6abfd7bae108b0eed1c1b077)

§ 5.2 Rejection of Bids

§ 5.2.1 The Owner shall have the unrestricted right to reject any or all Bids. A Bid not accompanied by the required Bid Guaranty and other substantive information required by the Bidding Documents as determined by the Owner in its sole discretion, shall be rejected. A Bid which includes informalities and irregularities, or is in any way irregular, but which otherwise conforms to the requirements of the Bidding Documents, as determined by the Owner in its sole discretion, may be rejected.

§ 5.2.2 Before evaluating the Bids, the Owner will review the Bid submitted to determine whether it is responsive. A Bid is responsive if it includes a properly completed Bid form and is accompanied by the Bid Guaranty described in **Article 7**. A Bid must be responsive before the Owner will evaluate the Bid in accordance with **§ 5.3.1.** Examples of non-responsiveness, which may result in a Bid not being accepted and reviewed, in the Owner's sole discretion, include (but are not limited to) the following: failure to sign the Bid form, failure to acknowledge an Addendum that addresses the Bid amount, inclusion of exceptions or qualifications on the Bid form or on a separate sheet with the Bid form, failure to sign the Bid Guaranty, failure to use the Bid form included in the Bidding Documents provided to Bidders, failure to include a Bid amount for an Alternate accepted by the Owner, or failure to include a Unit Price or allowance requested on the Bid Form. If a Bid is determined to be non-responsive, it will be returned to the Bidder and will not be considered by the Owner.

§ 5.3 Acceptance of Bid (Award)

§ 5.3.1 It is the intent of the Owner to award a Contract to the lowest and best Bidder, provided the Bid has been submitted in accordance with the requirements of the Bidding Documents. The Owner shall have the right to waive any and all informalities and irregularities in a Bid received and to accept the Bid which, in the Owner's sole judgment and discretion, is the lowest and best. In determining the lowest and best Bidder, the following criteria will be considered in addition to the Bid amount:

§ .1 Bidder's past performance on other publicly-funded projects;
§ .2 Bidder's past performance on other Owner projects;
§ .3 Bidder demonstrates it has adequate equipment and facilities to perform the Work properly and expeditiously;
§ .4 Bidder has suitable financial resources to meet its obligations incident to the Work;
§ .5 Bidder has appropriate technical experience in projects of similar scope and conditions;
§ .6 Bidder's prior history for the successful and timely completion of projects, including Bidder's history of filing and having claims filed against it;
§ .7 Bidder's satisfactory compliance with all terms and conditions specified in the Hamilton County Minority, Women, and Small Business Enterprise Program packet which is included as part of the Bidding Requirements;
§ .8 Bidder's satisfactory compliance with the requirements set forth in the Responsible Bidder Requirements;
§ .9 Bidder demonstrates the ability to complete the Work in a timely, proper and expeditious manner; and
§ .10 Bidder's attendance at the pre-bid meeting.

§ 5.3.2 Unless Owner rejects all Bids, a Contract will be awarded as soon a practicable after the opening of Bids.

§ 5.3.3 The Owner shall have the right to accept Alternates in any order or combination, unless otherwise specifically provided in the Bidding Documents, and to determine the lowest and best Bidder on the basis of the sum of the Base Bid and Alternates accepted.

§ 5.3.4 No Contract will be awarded if the low Bidder for that Contract is more than 15% below the Median Bid unless the following procedure is followed:

§ .1 Architect and Construction Manager will hold an interview with the Bidder to determine what, if anything, has been overlooked in the Bid in question, and to analyze the process envisioned by the Bidder to complete the Contract.

§ .2 The financial status of the Bidder and its Surety shall be examined, based upon financial statements submitted by each to the Architect.

AIA Document A701 – 2018. Copyright © 1970, 1974, 1978, 1987, 1997 and 2018. All rights reserved. "The American Institute of Architects," "American Institute of Architects," "AIA," the AIA Logo, and "AIA Contract Documents" are trademarks of The American Institute of Architects. This document was produced at 12:16:15 EDT on 10/02/2026 under Subscription No.20250121573 which expires on 04/24/2027, is not for resale, is licensed for one-time use only, and may only be used in accordance with the AIA Contract Documents® Terms of Service. To report copyright violations, e-mail docinfo@aiacontracts.com.
User Notes: (6abfd7bae108b0eed1c1b077)

§ .3 Written confirmation by the Surety shall be submitted to the Construction Manager that it has reviewed the Bid in question and finds it to be in compliance with Bidding Documents.

§ .4 Bidder may be required to furnish satisfactory evidence of their experience and ability to execute work of like character, scope and size to that of the Work.

§ .5 The record of the Bidder in performing other publicly funded projects in the past will be considered.

§ .6 If after review and consideration, the acceptance of the lowest Bid is not in the best interest of the Owner, the Owner may reject the lowest Bid and accept another Bid so opened or reject all Bids and advertise for other Bids.

§ 5.3.5 No Bid nor any obligation hereunder to be assumed by the Owner, shall be considered accepted until such time as Owner, or Owner's representative, deposits in the U.S. Mail, or hands to Bidder personally, written notice of acceptance of Bid, addressed to Bidder at the address given on the Bid form.

§ 5.3.6 By submitting its Bid, the Bidder acknowledges and agrees that the Owner's determination of responsiveness and lowest and best is final and conclusive, and that if the Bidder, or any person at the Bidder's urging, directly or indirectly challenges such determination in any legal proceeding and such challenge is not successful, the Bidder shall reimburse the Owner for all legal fees and expenses incurred by Owner that are related to such challenge, including the cost of collection.

ARTICLE 6 POST-BID INFORMATION

§ 6.1 Contractor's Qualification Statement

Bidders to whom award of a Contract is under consideration shall submit to the Architect and Construction Manager, upon request and within the timeframe specified by the Architect, a properly executed AIA Document A305™, Contractor's Qualification Statement, unless such a Statement has been previously required and submitted for this Bid.

§ 6.2 Post-Bid/Pre-Award Meeting

Bidder shall be required to attend a post-bid, pre-award meeting with the Architect and Construction Manager and shall submit to the Architect and Construction Manager any and all documentation requested by the Architect or Construction Manager.

§ 6.3 Submittals

§ 6.3.1 The Bidder will be required to establish to the satisfaction of the Architect, Construction Manager and Owner the reliability and responsibility of the persons or entities proposed to furnish and perform the Work described in the Bidding Documents.

§ 6.3.2 Prior to the execution of the Contract, the Architect or Construction Manager will notify the Bidder if the Owner, Construction Manager or Architect, after due investigation, has reasonable objection to a person or entity proposed by the Bidder. If the Owner, Construction Manager or Architect has reasonable objection to a proposed person or entity, the Bidder must submit an acceptable substitute person or entity.

§ 6.3.3 Persons and entities proposed by the Bidder and to whom the Owner, Construction Manager and Architect have made no reasonable objection must be used on the Work for which they were proposed and shall not be changed except with the written consent of the Owner, Construction Manager and Architect.

ARTICLE 7 BID GUARANTY AND PERFORMANCE BOND REQUIREMENTS

§ 7.1 Bid Guaranty Requirements

§ 7.1.1 Each Bidder shall submit, **with its Bid**, a Bid Guaranty, made payable to the "Board of County Commissioners, Hamilton County, Ohio and Messer Construction Co." as Obligees in the form of either (a late Bid Guaranty will not be accepted):

§ 7.1.1.1 A Bid Guaranty and Contract Bond for the full amount of the Bid (including Alternates) and which meets the requirements of Ohio Revised Code §153.54(B) and §153.571 (a copy of a Bid Guaranty and Contract Bond is included within the Bidding Documents); or

AIA Document A701 – 2018. Copyright © 1970, 1974, 1978, 1987, 1997 and 2018. All rights reserved. "The American Institute of Architects," "American Institute of Architects," "AIA," the AIA Logo, and "AIA Contract Documents" are trademarks of The American Institute of Architects. This document was produced at 12:16:15 EDT on 10/02/2026 under Subscription No.20250121573 which expires on 04/24/2027, is not for resale, is licensed for one-time use only, and may only be used in accordance with the AIA Contract Documents® Terms of Service. To report copyright violations, e-mail docinfo@aiacontracts.com.
User Notes: (6abfd7bae108b0eed1c1b077)

§ 7.1.1.2 A certified check, cashier's check, or an irrevocable letter of credit pursuant to Chapter 1305 of the Ohio Revised Code in the amount equal to ten percent (10%) of the Bid (including Alternates) and which meets the requirements of Ohio Revised Code §153.54(C)(1).

§ 7.2 Bid Guaranty and Contract Bond

§ 7.2.1 The Bid Guaranty and Contract Bond shall be substantially in the form set forth in Ohio Revised Code §153.571 and shall serve as an assurance that upon acceptance of the Bid, the Bidder shall comply with all conditions precedent for Contract execution, within the time specified by the Owner. **No other form of Bid Guaranty bond is acceptable to the Owner for use as a Bid Guaranty and Contract Bond. Should Bidder submit with its Bid a Bid Guaranty bond which is not in substantial conformance with Ohio Revised Code §153.54(B) and §153.571, its Bid shall be rejected.**

§ 7.2.2 If the blank line for the penal sum on the Bid Guaranty and Contract Bond is left blank, the penal sum shall be the full amount of the Base Bid plus all additive Alternates. If the blank line for the penal sum is filled in, the amount shall not be less than the full amount of the Base Bid plus all additive Alternates, stated in dollar and cents. **A percentage is not acceptable**. In the event the blank line for the penal is filled in for an amount less than the full amount of the Base Bid plus all additive Alternates or as a percentage amount, the Bid shall be rejected.

§ 7.2.3 The Bid Guaranty and Contract Bond shall be issued by a surety company authorized to do business as a surety in the State of Ohio. If the Bidder submits a Bid Guaranty and Contract Bond executed by a surety not licensed, or a surplus lines company not approved, by the Ohio superintendent of insurance to execute such a bond in Ohio, the Bid shall be deemed nonresponsive and shall be rejected.

§ 7.2.4 An authorized agent must sign the Bid Guaranty and Contract Bond and the Bidder shall provide a certified and current copy of the Power of Attorney from the surety.

§ 7.2.5 The Bid Guaranty and Contract Bond shall affirmatively state on its face that the surety is authorized to execute bonds in the State of Ohio and that the liability incurred is within the limits of Ohio Revised Code §3929.02.

§ 7.2.6 For successful Bidders who have submitted the Bid Guaranty and Contract Bond as Bid Guaranty, the Performance Bond is the Bid Guaranty and Contract Bond and no other form of Performance Bond is required.

§ 7.2.7 The cost of the Bid Guaranty and Contract Bond shall be included in the Bid.

§ 7.3 Certified Check, Cashier's Check, or Irrevocable Letter of Credit/Performance Bond

§ 7.3.1 A Bid Guaranty filed in the form of a certified check, cashier's check, or an irrevocable letter of credit shall be conditioned to provide that if the Bid is accepted, the Bidder, after the awarding or the recommendation for the award of the Contract, whichever the Owner designates, will enter into a proper Contract in accordance with the Bidding Documents. If for any reason, other than as authorized by §9.31 of the Ohio Revised Code or division (G) of §153.54 of the Ohio Revised Code, the Bidder fails to enter into the Contract, and the Owner awards the Contract to the next lowest and best bidder, the Bidder is liable to the Owner for the difference between the Bidder's Bid and that of the next lowest and best bidder, or for a penal sum not to exceed ten per cent of the amount of the Bid, whichever is less. If the Owner does not award the Contract to the next lowest and best bidder but resubmits the Project for bidding, the Bidder failing to enter into the Contract, except as provided in division (G) of §153.54 of the Ohio Revised Code, is liable to the Owner for a penal sum not to exceed ten per cent of the amount of the Bid or the costs in connection with the resubmission, of printing new contract documents, required advertising, and printing and mailing notices to prospective bidders, whichever is less.

AIA Document A701 – 2018. Copyright © 1970, 1974, 1978, 1987, 1997 and 2018. All rights reserved. "The American Institute of Architects," "American Institute of Architects," "AIA," the AIA Logo, and "AIA Contract Documents" are trademarks of The American Institute of Architects. This document was produced at 12:16:15 EDT on 10/02/2026 under Subscription No.20250121573 which expires on 04/24/2027, is not for resale, is licensed for one-time use only, and may only be used in accordance with the AIA Contract Documents® Terms of Service. To report copyright violations, e-mail docinfo@aiacontracts.com.
User Notes: (6abfd7bae108b0eed1c1b077)

§ 7.3.2 For Bidders who have submitted a certified check, cashier's check, or an irrevocable letter of credit as Bid Guaranty, the successful Bidder shall, at the time the Contract is entered into, file with the Owner a Performance Bond, for the full amount of the Contract. The Performance Bond shall be substantially in the form set forth in Ohio Revised Code §153.57 and shall meet all requirements set forth in **§§ 7.2.3, 7.2.4**, and **7.2.5**, herein.

§ 7.3.3 The cost of the Bid Guaranty filed in the form of a certified check, cashier's check, or an irrevocable letter of credit and any Performance Bond shall be included in the Bid.

ARTICLE 8 FORM OF AGREEMENT BETWEEN OWNER AND CONTRACTOR

The successful Bidder shall promptly enter into an Agreement for the Work. The Agreement for the Work will be written on AIA Document A132-2019, Standard Form of Agreement Between Owner and Contractor, Construction Manager as Adviser Edition, as modified by Owner and included in the Project Manual.

ARTICLE 9 ADDITIONAL REQUIREMENTS

All Bidders are advised the Owner is providing an Owner-Controlled Insurance Program ("OCIP") for the Project. Contractor must review and carry the coverages set forth in Article 11 of the AIA A232-2019 included within the Project Manual until enrolled in the OCIP, then comply with the OCIP insurance manual plus any "outside OCIP" coverages (such as Commercial Automobile; Workers' Compensation and Employer's Liability; Contractor's Equipment/Installation Floater Insurance; Contractors' Pollution Liability; and Contractors' Professional Liability). In recognition of the Owner's decision to carry the OCIP providing General Liability and Excess Liability insurance, as more fully described in the OCIP Manual contained in the Project Manual for the Project and a part of the Bidding Documents, the Contractor shall not include in its Bid any fees or expenses for Bidder's or Bidder's subcontractors General Liability and Excess Liability insurance for on-site exposures on the Project.

AIA Document A701 – 2018. Copyright © 1970, 1974, 1978, 1987, 1997 and 2018. All rights reserved. "The American Institute of Architects," "American Institute of Architects," "AIA," the AIA Logo, and "AIA Contract Documents" are trademarks of The American Institute of Architects. This document was produced at 12:16:15 EDT on 10/02/2026 under Subscription No.20250121573 which expires on 04/24/2027, is not for resale, is licensed for one-time use only, and may only be used in accordance with the AIA Contract Documents® Terms of Service. To report copyright violations, e-mail docinfo@aiacontracts.com.
User Notes: (6abfd7bae108b0eed1c1b077)

DOCUMENT 001000.3
ADDITIONAL BID CONDITIONS

PART 1 GENERAL

1.01 SUMMARY

A. The contracting practices used for this project shall conform to the Hamilton County for MBE/WBE/SBE Program for the Paycor Stadium Project.

B. The following documents contain additional bid conditions and are supplemental to and an integral part of the “Instructions to Bidders”:

1. Special Provision – Hamilton County for MBE/WBE/SBE (Minority Business Enterprise/Women Business/Small Business Enterprise) Program
   (Hamilton County is still utilizing the terms set forth in the Project Manual and the Bid Documents).
2. Special Provision – Responsible Bidder Requirements Applicable to Public Contracts
3. ALL MBE/WBE/SBE Forms,are to be submitted with bid.

4. The Contractor’s Non-discrimination Policy also must be submitted with bid.

PART 3

END

BID FORM

ACKNOWLEDGMENT OF BIDDER:

Submitted by: _____
(enter company name here)

TO: The Board of County Commissioners, Hamilton County, Ohio
Hamilton County Purchasing Department
138 East Court Street, Room 507
Cincinnati, Ohio 45202

We, the undersigned, having visited the site, carefully studied the local conditions affecting the cost of the work, and having thoroughly examined the Bidding Documents, consisting of the Instructions to Bidders, this Proposal Form, Bonding Requirements, Minority, Women, and Small Business Enterprise Program, Contract Form, General Conditions, Technical Specifications, Drawings, and Addenda for the Project titled:

Paycor Stadium South Score Board Facade
Bid Package #5
ITB#078-26
TC-11 Facade

prepared by KZF, 700 Broadway, Cincinnati, Ohio 45202, for the Board of County Commissioners, Hamilton County, Ohio, do hereby propose to perform all work required to be performed, and to provide and furnish equipment, transportation, services, and temporary installations necessary to perform and complete, in a workmanlike manner, such items of work hereinafter designated by and for the sum of money set forth for said items.

ACKNOWLEDGMENT OF ADDENDA:

The undersigned acknowledges receipt of the following Addenda to the Contract documents (indicate Addendum Number and Issue Date):

Addendum No._____ Date:_____ Page(s): _____

Addendum No. _____ Date: _____ Page(s): _____

Addendum No. _____ Date: _____ Page(s): _____

Addendum No. _____ Date: _____ Page(s): _____

Addendum No. _____ Date: _____ Page(s): _____

A. BIDDER AGREEMENTS:

The undersigned Bidder Agrees:

1. To accept the provisions of these Instruction to Bidders, Supplementary Instructions to Bidders, General Conditions, and Division 1 of the Specifications.
2. To provide and include a Bid Guaranty and Contract Bond as dictated in the Legal Advertisement.
3. To accept the provisions and provide all required documents contained within the Minority, Women, and Small Business Enterprise Program.
4. That the amounts stated in this Proposal Form represents the entire cost of the work. The completion time stated represents the entire time for performance of the work. The amount bid includes allowances for all fees for permits, taxes and insurance required or applicable to the work. That no claims will be made for any increases in wage scales or material costs.
5. To certify that this bid is genuine not sham or collusive or made in the interest or in behalf of any person not herein named, and that the undersigned has not directly or indirectly induced or solicited any other bidder to put in a sham bid, or any other person, firm or corporation to refrain from bidding and that the undersigned bidder has not in any manner sought by collusion to secure for himself and advantage over any other bidder.
6. And certifies that (we) (he) (they) (has) (have not) previously performed work subject to the President's Executive Order No. 11246.
7. That this bidder will comply with all City, State, and Federal Statutes relating to Liability Insurance, Working Hours, Minimum Wages, Safety and Sanitary Regulations, which in any way may affect those engaged or employed on the work in the event that the award of the Contract is made on the Proposal herein submitted.
8. That the bidder will comply with any new laws or acts regulating public buying procedures.
9. Refer to additional instructions for bidder registration process (See Registration Form within the Legal Advertisement Packet).

BID FORM STIPULATIONS:

1. The wording of this proposal shall be used throughout, without damage, alteration or addition. Any change in wording may cause it to be rejected.
2. Include all required forms.
3. Bid amounts shall be provided in both words and figures. The worded amount shall govern in the case of discrepancies or in cases of error in extending the total amount of the bid, the unit price may govern.
4. In the event that qualified bidders submit equal bids (to the penny) and are deemed the lowest and best bidders for that trade's bid, those bidders agree to let the County award the contract to the bidder selected by the current "tied bid" procedures used by the Hamilton County Purchasing Department.
5. A Base Bid must be submitted prior to bidding Alternates Bid unless noted otherwise in the Bid Form.

6. The Board of County Commissioners reserves the right to reject any or all bids and, unless otherwise specified by the bidder, to accept any item in the bid.

C. ALLOWANCES:

The County may after the bids are opened add an allowance to the contract at its own discretion. This allowance shall be added to the contract and so denoted in the contract in section 4.3. Any allowances added by the County shall be for incidentals associated with this project. If unused, during the project all allowance monies shall be returned to the County at the end of the project or at the County's request.

A. General:

1. Work related to cash allowances will be performed on a time and material basis. The Contractor shall furnish and certify daily detail records of all labor and materials provided.

2. If the cost to complete the work is less than the cash allowance, a deduct Change Order will be prepared by the County for the cost difference.

B. Cash Allowance Items:

1. Trade Contract TC-11 Façade No.1: $100,000

D. Trade Contract AWARDING:

The selection process includes but is not limited to:

1. The rules and laws set forth in the Ohio Revised Code for Public Bids.
2. The bidder submitting the Lowest and Best Bid per Ohio Revised Code.
3. The lowest accepted Base Bid and "Accepted" Alternate combination.
4. The bidder best meeting all required specifications.
5. Review of the required forms submitted by the Bidder at the time of the Bid Opening in compliance with the Minority, Women, and Small Business Program.
6. Substitutions not approved prior to the bid opening cannot be used in the determination of the Lowest and Best Bid Determination.
7. Substitutions will not be used in determining Lowest and Best Bids.
8. If Hamilton County and the bidder are unable to successfully come to terms regarding the bid and subsequent contract, Hamilton County reserves the right to terminate contract discussions with the bidder(s) and select the next apparent low bidder.

Hamilton County reserves the right to:

1. Reject any or all bids.
2. Waive any informality in the bids.
3. Eliminate conditions or terms that are not in the best interest of Hamilton County and its residents.

E. ADDITIONAL BID REQUIREMENTS:

Bidder shall review the Legal Advertisement for project timeline, pre-bid meeting information, bidding registrations, and addendum notifications.

Bidder shall review the Summary of Work for work hours, length of project, permitting requirements, contractor and sub assignments, and prime contract arrangements (single vs multiple contracts).

Bidder shall assume that No Asbestos removal or remediation is required on this project. Any contractor suspecting asbestos shall stop work immediately and report suspicious areas to the Owner. The owner shall be responsible for removing any asbestos discovered or targeted for removal in this project.

F. BID PROPOSALS:

Bidder's Name: _____

Each bidder is required to fill out all entries in the proposal section. Enter "NO BID" where no bid will be entered for this proposal.

BASE BID TC-11 Facade

(Includes $100,000 Cash Allowance)

TOTAL COST (LUMP SUM): _____ *(in numbers)*

_____ *(in words)*

the worded amount shall govern

For reference only provide a breakdown of the total prices listed in the Base Bid. This breakdown is solely a reference tool to be used by the County and shall not enter into the determination of the winning bidder for this project. The summation of the lines below should equal your total price listed above.

General Contractor Material: $_____*(in numbers)*

General Contractor Labor: $_____*(in numbers)*

Mechanical Material: $_____*(in numbers)*

Mechanical Labor: $_____*(in numbers)*

Electrical Material: $_____*(in numbers)*

Electrical Labor: $_____*(in numbers)*

Project Management: $_____*(in numbers)*

Allowance: $_____*(in numbers)*

The summation of these lines should equal the Total Cost above.

G. ALTERNATES:

G.1 Add Alternate: Provide Stainless Steel panels and fins in lieu of aluminum per the specifications

$_____

H. Unit Prices none

I. SUBSTITUTIONS To be submitted prior to bid opening for approval.

Bidder's Name: _____

All Prime Contractors hereby acknowledge and accept all responsibilities assigned to them by the General Conditions, Minority, Women, and Small Business Program, and Division One of the Specifications. All fees for supervision and coordination are included in the bids.

Bids submitted by virtue of this Proposal hereby are acknowledged by the Owner to be made under the conditions that the Bidder will not be prevented, on account of strikes or other disruptions affecting source of supply, from obtaining materials necessary to carry out his contract to complete the construction covered thereby.

It is understood and agreed by the undersigned that the Owner reserves the right to reject any and all bids.

It is agreed that this Proposal shall be irrevocable for a period of Sixty (60) days after receipt of same by the Owner at the Day and Place set forth in the "Legal Advertisement".

[ ] We have read and agree to the terms listed above.
(check here)

Firm Name: _____

( ) Corporation ( ) Partnership ( ) Sole Proprietorship *(check one)*

Authorized Offerror *(print name):* _____

Authorized Signature *(sign name):* _____

Title: _____

Official Address: _____

_____

_____

E-mail Address: _____

Telephone Number

Bid Submission Documents

DOCUMENT 001000.5
BID GUARANTY AND CONTRACT BOND
(SECTION 153.571 OHIO REVISED CODE)

KNOWN ALL PERSONS BY THESE PRESENTS, that we, the undersigned

_____
(Name and Address)

as Principal and _____
(Name of Surety)
as Surety, are hereby held and firmly bound unto the Board of County Commissioners of Hamilton County, Ohio ("Primary Obligee") and Messer Construction Company ("Additional Obligee") collectively, the Obligees, in the penal sum of the dollar amount of the bid submitted by the Principal to the Primary Obligee on _____to undertake the project known as:

_____ (the "Project").

The penal sum referred to herein shall be the dollar amount of the Principal's bid to the Primary Obligee, incorporating any additive or deductive alternate proposals made by the Principal on the date referred to above to the Primary Obligee, which are accepted by the Primary Obligee. In no case shall the penal sum exceed the amount of_____dollars ($ _____). *(If the foregoing blank is not filled in, the penal sum will be the full amount of the Principal's Bid, including alternates. Alternatively, if the blank is filled in, the amount stated must not be less than the full amount of the bid, including alternates, in dollars and cents. A percentage is not acceptable.)* For the payment of the penal sum well and truly to be made, we hereby jointly and severally bind ourselves, our heirs, executors, administrators, successors, and assigns.

THE CONDITION OF THE ABOVE OBLIGATION IS SUCH, that whereas the above-named Principal has submitted a bid on the above-referred Project;

NOW, THEREFORE, if the Primary Obligee accepts the bid of the Principal and the Principal fails to enter into a proper contract in accordance with the bid, plans, details, specifications, and bills of material; and in the event the Principal pays to the Primary Obligee the difference not to exceed ten percent of the penalty hereof between the amount specified in the bid and such larger amount for which the Primary Obligee may in good faith contract with the next lowest bidder to perform the work covered by the bid; or in the event the Primary Obligee does not award the contract to the next lowest bidder and resubmits the project for bidding, the Principal pays to the Primary Obligee the difference not to exceed ten percent of the penalty hereof between the amount specified in the bid, or the costs, in connection with the resubmission, of printing new contract documents, required advertising and printing and mailing notices to prospective bidders, whichever is less, then this obligation shall be null and void, otherwise to remain in full force and effect; if the Primary Obligee accepts the bid of the Principal and the Principal within ten days after the awarding of the contract enters into a proper contract in accordance with the bid, plans, details, specifications, and bills of material, which said contract is made a part of this bond the same as though set forth herein; and

NOW ALSO, if the said Principal shall well and faithfully perform each and every condition of such contract; and indemnify the Board of County Commissioners of Hamilton County, Ohio, against all damage suffered by failure to perform such contract according to the provisions thereof and in accordance with the plans, details, specifications, and bills of material therefor; and shall pay all lawful claims of subcontractors, materials suppliers, and laborers, for labor performed and materials furnished in the carrying forward, performing or completing of said contract; we agreeing and assenting that this undertaking shall be for the benefit of any

materials suppliers or laborer having a just claim, as well as for the Obligees herein; then this obligation shall be void; otherwise the same shall remain in full force and effect; it being expressly understood and agreed that the liability of the Surety for any and all claims hereunder shall in no event exceed the penal amount of this obligation as herein stated.

THE SAID Surety hereby stipulates and agrees that no modifications, omissions, or additions, in or to the terms of the said contract or in or to the plans specifications therefore shall in any wise affect the obligations of said Surety on this bond, and it does hereby waive notice of any such modifications, omissions or additions to the terms of the contract or to the work or to the specifications.

The Surety shall not be liable to the Primary Obligee, the Additional Obligee, or either of them, unless the Primary Obligee, the Additional Obligee, or either any of them shall make payments to the Principal (or in the case the Surety arranges for completion of the Contract to the Surety) strictly in accordance with the terms of said Contract as to payments and shall perform all other obligations to be performed under said Contract at the time and in the manner therein set forth; and

PROVIDED, FURTHER that the aggregate liability of the Surety under said Bond to any or all of the Obligees, as their interests may appear, is limited to the penal sum of said Bond, and that the Additional Obligee's rights hereunder are subject to the same defenses Principal and/or Surety have against the Primary Obligee, and that the total liability of the Surety shall in no event exceed the amount recoverable from the Principal by the Primary Obligee under said Contract.

SIGNED AND SEALED This _____day of _____, 20____

PRINCIPAL:

_____

BY: _____

TITLE: _____

SURETY:_____

BY: _____
Attorney-in-Fact

Approved _____, 20__
BOARD OF COUNTY COMMISSIONERS
HAMILTON COUNTY, OHIO

_____

_____

_____

SURETY COMPANY ADDRESS:

_____
Street

_____
City State Zip

_____
Telephone

SURETY AGENTS ADDRESS:

_____
Agency Name

_____
Street

_____
City State Zip

_____
Telephone

NOTE: Failure by any party to sign Bid Guaranty and Contract Bond shall result in rejection of Bid.

Bid Submission Documents
Complete & Submit With Bid

DOCUMENT 001000.6
CERTIFICATE OF COMPLIANCE

STATE OF OHIO
DEPARTMENT OF INSURANCE

As **DIRECTOR OF INSURANCE OF THE STATE OF OHIO**, I do hereby certify the _____, a corporation located at _____ in the State of _____, has complied in all respects with the laws of this State applicable to it, and is authorized to transact in this State its appropriate business of insurance as described by Section 3929.01 (A), lines:

( )	1	Fire	( )	18	Aircraft (all perils)
( )	2	Allied Lines	( )	19	Fidelity
( )	3	Farmowners Multiple Peril	( )	20	Surety
( )	4	Homeowners Multiple Peril	( )	21	Glass
( )	5	Commercial Multiple Peril	( )	22	Burglary & Theft
( )	6	Ocean Marine	( )	23	Boiler & Machinery
( )	7	Inland Marine	( )	24	Credit
( )	8	Financial Guaranty	( )	25	Reinsurance Only
( )	9	Medical Malpractice	( )	26	Other (List)
( )	10	Earthquake			
( )	11	Group A & H			_____
( )	12	Credit A & H (Group & Individual)			
( )	13a	Collectively Renewable A & H			_____
( )	13b	Noncancellable A & H			
( )	13c	Guaranteed Renewable A & H			_____
( )	13d	Nonrenewable for Stated Reasons Only			
( )	13e	Other Accident Only			
( )	13f	All Other A & H			
( )	14	Workers' Compensation (to the extent permitted by law)			
( )	15	Other Liability			
( )	16a	Private Passenger Auto No-Fault (personal injury protection to the extent permitted by law)			
( )	16b	Other Private Passenger Auto Liability			
( )	16c	Commercial Auto No-Fault (personal injury protection to the extent permitted by law)			
( )	16d	Other Commercial Auto Liability			
( )	17a	Private Passenger Auto Physical Damage			
( )	17b	Commercial Auto Physical Damage			

FROM: _____, 20_____ UNTIL: _____, 20_____

_____, 20_____

In witness whereof, I have signed my name and caused my seal to be affixed at Columbus, Ohio, this day and date

_____
Director of Insurance of Ohio

Bid Submission Documents
Complete & Submit With

DOCUMENT 001000.7

NON-COLLUSION AFFIDAVIT OF CONTRACTOR

THIS AFFIDAVIT MUST BE FILLED OUT AND EXECUTED BY THE BIDDER; IF THE BID IS MADE BY A CORPORATION, THEN BY ITS PROPERLY AUTHORIZED AGENT

State of Ohio, County of Hamilton, ss.

_____

(Name of Bidder or Bidders)

being duly sworn does depose and say that _____ resides

(Bidder's Authorized Representative)

at _____

(Address of Bidder)

and that _____

(Give names of all persons, firms or corporations interested in bid)

is/are the only person(s) interested with _____

(Name of Bidder)

in the profits of the Contract to be predicated on the within bid; that the said Contract will be performed without any connection or interest in the profits thereof with any other person making any bid or proposal for said work; that said bid, is on _____ part, in all

(His/Her/Their)

respects fair, and without collusion or fraud; and also that no member of the Board of County Commissioners, or any other officer or employee of Hamilton County, is directly or indirectly interested therein.

Subscribed and sworn to this _____

day of _____, 20____ before

me _____

(Notary Public)

_____

(Signature of Bidder's Authorized Representative)

_____

(Print Name of Bidder's Authorized Representative)

_____

(Address of Bidder)

Bid Submission Documents
Complete & Submit With Bid

DOCUMENT 001000.8
BIDDER'S CERTIFICATION CONCERNING
EQUAL EMPLOYMENT OPPORTUNITY REQUIREMENTS

1. _____ (Name of Bidder) certify that I intend to use the following listed construction trades in the work under the Contract:

_____

_____

_____

2. The bidder hereby certifies that he **has ...., has not ....,** participated in a previous contract or subcontract subject to the equal opportunity clause, as required by Executive orders 10925, 11114, or 11246, and that he **has ...., has not ....,** filed with the Joint Reporting Committee, the Director of the Office of Federal Contract Compliance, a Federal Government Contract Compliance, a Federal Government contracting or administering agency, or the former President's Committee on Equal Employment Opportunity, all reports due under the applicable filing requirements. ***The Bidder must circle the appropriate "has or has not" above.***

_____
Authorized Representative of Bidder
Date

On behalf of _____
(Name of Bidder)

Document 001000.9

PERSONAL PROPERTY TAX STATEMENT

In accordance with Section 5719.042 of the Ohio Revised Code, I hereby certify that the company I represent is not delinquent in the payment of personal property taxes to the State of Ohio or any subdivision thereof.

_____
SIGNATURE

_____
PRINT NAME

_____
TITLE

TO BE COMPLETED BY NOTARY PUBLIC

On _____, there appeared before me
DATE

_____**,** saying that he/she is
PRINT NAME

_____ of,
PRINT TITLE

_____,
PRINT NAME OF COMPANY

and that he/she understands all of the implications of the above statement and has signed in good faith.

_____
SIGNATURE OF NOTARY PUBLIC

Bid Submission Documents
Complete & Submit With Bid

DOCUMENT 001000.10

SUBCONTRACTOR AND MATERIAL SUPPLIER LIST

Bidder must list below all subcontractors and material suppliers used in compilation of bid. Branches shall be listed in the order appearing in the Project Manual index except as otherwise indicated. Contractor shall list its name for those branches, which it will complete with its own forces.

BRANCH	MATERIAL SUPPLIER AND/OR SUBCONTRACTOR NAME AND ADDRESS

NOTE: This listing is not meant to commit bidder to material suppliers or subcontractors above. If bidder can show just cause at time of awarding Contract that a specific material supplier or subcontractor has withdrawn its bid or raised its bid, bidder may substitute at no additional cost to the County a material supplier or subcontractor upon written approval of the County.

END OF SECTION

DOCUMENT 001000.11
MINORITY, WOMEN AND SMALL BUSINESS ENTERPRISE PROGRAM

PART 1 GENERAL

1.1 SUMMARY

A. Minority, Women and Small Business Enterprise Program (Section 001000, Document 001000.11)

B. Goal Compliance Plan (Section 001000, Document 001000.12, Appendix B. 1)

C. Application for Progam Waiver(Section 001000, Document 001000.13, Appendix B. 2)

D. Letter of Intent (LOI) Between Prime Contractor and Sub-Contractor/Supplier (Section 001000, Document 001000.14, Appendix B. 3)

PART 2 PRODUCTS

Not Used

PART 3 EXECUTION

Not Used

END OF SECTION

HAMILTON COUNTY MINORITY, WOMEN, AND SMALL BUSINESS ENTERPRISE PROGRAMS

Hamilton County
OHIO

Section 1. Minority, Women, and Small Business Enterprise Programs Purpose

The Board finds Minority Business Enterprises ("MBEs"), Women Business Enterprises ("WBEs"), and Small Business Enterprises ('SBEs") provide employment and economic growth in Hamilton County, Ohio. The Board further finds that encouraging the participation of minority businesses, women businesses and small businesses in Hamilton County construction, professional services, and goods and services procurement will benefit all residents of Hamilton County, Ohio. Hamilton County is an equal business opportunity governmental entity, and has strived to provide, and will continue to provide, equal business opportunities to diverse groups within our region.

Section 2. Non-Discrimination Policy

I. Overview

The County is committed to a policy of non-discrimination. Every contract and subcontract for or on behalf of the County, for construction, professional services, and goods and services shall contain provisions by which the contractor agrees to both of the following:

A) That, in the hiring of employees for the performance of work under the contract or any subcontract, no contractor, subcontractor, or any person acting on a contractor's or subcontractor's behalf, by reason of race, creed, sex, disability or military status as defined in section 153.59 of the Ohio Revised Code, or color, shall discriminate against any citizen of the state in the employment of labor or workers who is qualified and available to perform the work to which the employment relates;

B) That no contractor, subcontractor, or any person on a contractor's or subcontractor's behalf, in any manner, shall discriminate against or intimidate any employee hired for the performance of work under the contract on account of race, creed, sex, disability or military status as defined in section 153.59 of the Ohio Revised Code, or color.

II. Non-Discrimination Policy for Contracting

No respondent, vendor, and/or Contractor doing business with the County who competes for or is awarded a public contract shall discriminate or retaliate against a MBE/WBE/SBE. If a respondent is found to be in violation of this policy, either in the awarding of the subcontract in connection with an opportunity advertised by the County or in a contract between the County and the respondent, the County will use all remedies legally available under the law to address the policy violations.

The County may not allege or investigate an allegation of an occurrence of discrimination or retaliation in subcontracting as a basis for debarring or disqualifying a

respondent more than three (3) years after the alleged discriminatory or retaliatory conduct occurred or more than three (3) years after the County, in the exercise of reasonable diligence, should have discovered the conduct, whichever is later.

A respondent shall certify in the documents accompanying the respondent's offer to enter into a public contract that the respondent has not discriminated or retaliated and will not discriminate or retaliate against any MBE/WBE/SBE in obtaining any required subcontract.

After a respondent is awarded a public contract, if the respondent violates the certification provisions of these Policies and Procedures, the County may regard the violation as a breach of contract that permits one or more actions in Section 13.

III. Complaints of Discrimination or Retaliation
Any adult person, business entity, association, organization, or government agency may file a complaint with the Director of ECS stating facts showing or tending to show that a respondent has, within the preceding three (3) year period from the date of the complaint, engaged in discrimination or retaliation in connection with a County contract or solicitation. Within ten (10) business days, the Director, or his/her designee, shall notify the respondent against whom the complaint was filed that a complaint has been received.

IV. Complaint Procedure, Initial Findings and Recommendations
The complaint will be sent to ECS to review and determine whether there is noncompliance of the contract. See the noncompliance process in Section 13 and the appeal process in Section 14 for additional information about complaint procedures, findings, and recommendations.

Section 3. Minority, Women, and Small Business Enterprise Contract Goals

The MBE/WBE/SBE Programs goal setting applies to all competitively bid County-funded contracts of $75,000.00 or more. MBE/WBE goals will be determined based on availability data provided by the *MBE/WBE Goal-Setting Worksheet* on a contract-by-contract basis.
The MBE utilization goal for this contract is __16.5__%, and the WBE utilization goal is __4.2__%.
The SBE utilization goal for this contract is __20__%.

THE UTILIZATION GOALS FOR THIS CONTRACT ARE:

MBE:__16.5__ % WBE: __4.2__ % SBE:__20__ %

Respondents shall be fully informed of the MBE/WBE/SBE Programs and of any MBE/WBE/SBE contract goals, in all County bid documents. When State and/or Federal funding sources require affirmative action goals, those goals, as defined in the contract documents, replace the requirements of the MBE/WBE/SBE Goals Program.

Every respondent shall be required to submit to the County, with its bid, a plan for the engagement of MBEs/WBEs/SBEs in connection with the contract, known as the *MBE/WBE/SBE Goal Compliance Plan*. The *MBE/WBE/SBE Goal Compliance Plan* form, which shall include, among other things, the names, addresses, phone number, Tax I.D. number, and certification numbers, if applicable, of certified businesses, and any other information required by the Director, ECS, as set forth in the bid solicitation documents. If awarded a contract or procurement with the County, a Contractor shall use its Good Faith Efforts at all times to implement and accomplish the objectives with respect to the use of MBEs, WBEs and SBEs as set forth in the *MBE/WBE/SBE Goal Compliance Plan*. Following the award, the *MBE/WBE/SBE Goal Compliance Plan* shall become a part of the contract between the Contractor and the County. Documents must be approved by ECS before the award is finalized. **Failure to comply with the above requirements shall result in the respondent being deemed non-responsive**.

All ITBs, RFPs, or RFQs shall include a requirement that, if an MBE/WBE/SBE contract participation goal is applicable, the respondent must:

A. With its bid, submit a signed *MBE/WBE/SBE Goal Compliance Plan* form, showing its commitment to meet or exceed the goals for the project or contract.

B. Make Good Faith Efforts, before the opening of bids or submittal of proposals, to meet the applicable contract participation goal(s); and

C. Keep records of its Good Faith Efforts adequate to permit a determination of compliance with the *MBE/WBE/SBE Goal Compliance Plan*. If a contract goal will not be met, a respondent shall be required to submit with its bid a signed *MBE/WBE/SBE Goal Compliance Plan* form, and the *Application for MBE/WBE/SBE Program Waiver* form for approval by ECS. The respondent must submit its Good Faith Efforts documentation for review by ECS with the bid document.

As such, Construction, Professional Services, and Goods and Services contracts of $77,500.00 or greater to be awarded competitively shall be reviewed by the ECS for MBE/WBE/SBE utilization responsiveness. After its review of the *MBE/WBE/SBE Goal Compliance Plan* and the *Application for MBE/WBE/SBE Program Waiver* form, ECS shall make a recommendation to the Purchasing Department and the Department of the respondent’s responsiveness.

While the inability of a respondent to meet goals established under the MBE/WBE/SBE Program may not alone exclude a respondent from award of a contract or procurement, the respondent's adequate Good Faith Efforts to meet the goal will be considered in determining award of the Contract.

For the procurement of goods and services, and/or the award of construction contracts value d at $77,500.00 or more, public notice of the opportunity to bid on such procurements or contracts will be given and the procurement or contract will be awarded to the respondent that submits the applicable bidding standard.

Section 4. Request for Waivers to MBE/WBE/SBE Contract Goals

If the respondent will not meet the MBE/WBE/SBE participation goals, in addition to its *MBE/WBE/SBE Goal Compliance Plan*, the respondent shall also submit with its bid a fully completed *Application for MBE/WBE/SBE Program Waiver* form (see Appendix B for applicable forms). The respondent shall indicate on the *Application for MBE/WBE/SBE Program Waiver* form, the Good Faith Efforts that it made prior to submission of its bid, to meet the MBE/WBE/SBE goals for the contract. The respondent shall also submit all documentary evidence to support those Good Faith Efforts made by the respondent, as declared on the *Application for MBE/WBE/SBE Program Waiver* form with its bid or the respondent will be deemed nonresponsive. The Director of ECS, the Director of Purchasing, or their designees, will review the documents submitted and make its determination of the *Application for MBE/WBE/SBE Program Waiver* request based on those submitted documents. When considering whether a respondent made adequate Good Faith Efforts to achieve the MBE/WBE/SBE participation goals, the County will evaluate the described efforts and documentation provided by contractors.

Section 5. Good Faith Efforts Documentation

All respondents must document the Good Faith Efforts it took to obtain MBE/WBE/SBE participation. As part of the selection process, a review of the respondent's *MBE/WBE/SBE Goal Compliance Plan* form is performed to determine the respondent's commitment to meeting the MBE/WBE/SBE goals for the contract. If the respondent will not meet the MBE/WBE/SBE participation goal, the *Application for MBE/WBE/SBE Program Waiver* form must be submitted with the bid.

Such Good Faith Efforts may include, but are not limited to the following:

A. Respondent's attendance at pre-bid conference;

B. Advertisement in general circulation media, trade publications, and minority focused media at least two (2) weeks before bids or proposals are due;

C. Tailored mailings to MBE/WBE/SBE firms notifying them of contracting opportunities at least two (2) weeks before bids or proposals are due;

D. Efforts made to select portions of the work proposed to be performed by MBE/WBE/SBE firms in order to increase the likelihood of achieving the stated goal(s);

E. Efforts to negotiate with MBE/WBE/SBE firms for specific sub-bids, including at a minimum:

a. The names, addresses and telephone numbers of MBE/WBE/SBE firms that were contacted;

b. A description of the information provided to MBE/WBE/SBE firms regarding the plans and specifications for portions of the work to be performed; and/or

c. A statement of why additional agreements with MBE/WBE/SBE firms were not reached.

F. If the respondent rejected any MBE/WBE/SBE firm(s) as unqualified, they must submit the reason(s) for this conclusion.

G. The respondent must also document technical assistance provided to the MBE/WBE/SBE firms in obtaining bonding or insurance required by the County.

H. Providing interested MBE/WBE/SBEs with prompt access to the plans, specifications, scope of work, and requirements of the contract.

I. Follow up to initial solicitations and copy of call logs.

J. Has a joint venture agreement or partnership for the contract with an MBE/WBE firm. Commercially useful function participation by the MBE/WBE/SBE must be 30% or greater.

K. Has a mentor-protégé agreement with an MBE/WBE/SBE firm for the contract.

Failure to provide the *Application for MBE/WBE/SBE Program Waiver* at the time of bid submission will result in the bid being determined to be non-responsive.

Respondents' Good Faith Efforts to meet MBE/WBE/SBE participation goals will be a factor in determining the award of the contract. In determining whether a respondent has made adequate Good Faith Efforts, the County may consider the performance of other respondents in meeting the MBE/WBE/SBE participation goals for the same solicitation. Respondents that fail to meet MBE/WBE/SBE goals and fail to demonstrate Good Faith Efforts shall be deemed non-responsive to the County's solicitation and shall not be eligible to be awarded the contract.

Section 6. MBE/WBE/SBE Programs Records and Reports

In order to ensure the effective tracking of these efforts, the following shall be done:

1) Each Contractor shall continuously maintain, compile, and provide to the County monthly information, utilizing the procurement software system (when available) relating to its use of MBE/WBE/SBEs. This information shall include without limitation the following information for each of the MBE/WBE/SBE subcontractors, suppliers, and/or vendors utilized by the Contractor: a description of the categories of contracts awarded to and spent with MBE/WBE/SBEs; the dollar value of contracts awarded to and spent with MBE/WBE/SBEs; the contract number(s), and contact information for the MBE/WBE/SBEs. Additionally, the Contractor shall provide information regarding its progress toward attaining the MBE/WBE/SBE goals for the contract.

2) Within thirty (30) days after the end of a contract in which there were MBE/WBE/SBE goals, each contractor shall provide the County with a report including by not limited to the following information: the identity of and contact information for each MBE/WBE/SBE to whom the contractor has awarded a subcontract or supplier agreement; the type of work performed or supplies provided by each subcontractor/supplier; the dollar value of each of the subcontracts/supplier agreements; and the total percentage of the value of the County contract subcontracted to MBE/WBE/SBE subcontractors, suppliers, and/or vendors.

Section 7. Payments to Subcontractors/Prompt Pay

A Contractor shall be required to certify electronically or in writing that all of its subcontractors, suppliers, and/or vendors have been paid for work and materials in relation to the County contract by the Contractor for previous disbursements before additional disbursements of contract and/or procurement payments are made to the Contractor. This section requires Hamilton County to make every effort to make payments to Contractors within thirty (30) days of receipt of a complete and responsive invoice.

If a subcontractor or material supplier submits an application or request for payment or an invoice for materials to a contractor in sufficient time to allow the contractor to include the application, request, or invoice in the contractor's own pay request submitted to an owner, the contractor, within ten calendar days after receipt of payment from the owner for improvements to the property, shall pay to the:

A. Subcontractor, an amount that is equal to the percentage of completion of the subcontractor's contract allowed by the owner for the amount of labor or work performed;
B. Material supplier, an amount that is equal to all or that portion of the invoice for materials that represents the materials furnished by the material supplier.

If the contractor fails to comply with this provision, the contractor shall pay the subcontractor or material supplier, in addition to the payment due, interest in the amount of eighteen percent per annum of the payment due, beginning on the eleventh day following the receipt of payment from the owner and ending on the date of full payment of the payment due plus interest to the subcontractor or material supplier. *Refer to Ohio Revised Code, Section 4113.61: Time limitations for payments to subcontractors and materialmen*.

During the contract and upon completion of the contract, the County may request documentation to certify payment to subcontractors or suppliers. The subcontractor or supplier may be required to sign off on the certification of payment form or affidavit, by the subcontractor or supplier, to attest to the receipt of payment from the Contractor.

Section 8. Subcontractor Substitution

If a contractor must substitute a subcontractor after the contract has been awarded, the contractor shall request approval for any substitution of a MBE/WBE/SBE subcontractor, supplier, or vendor used or proposed to be used by a Contractor, by completing and submitting a copy of the *Prime Contractor Substitution Request* form. The *Prime Contractor Substitution Request* form and instructions for completing the request will be included in the contract at the time of award.

Section 9. Change Orders and Amendments to Contracts

This rule applies to contracts valued at $100,000.00 and greater. Whenever a contract is amended, any single change order is issued, or subsidiary agreement is authorized that increases the total original contract cost by more than ten percent (10%), the MBE/WBE/SBE contract goal regarding the work, services, or supplies to be paid for through such amendment, modification, change order, or subsidiary agreement will remain the same; and, Good Faith Efforts will be made to ensure that it maintains the same percentage of MBE/WBE/SBE participation in performing the additional work, services, or supplies.

Section 10. Certification

The County does not conduct its own MBE, WBE or SBE certification process but does accept MBE, WBE, and SBE certifications from other County-approved agencies.

The requirements for County approved MBE certification are:

A. The applicant is an independent operating business and must have been in business for at least one year before applying for certification.
B. The owner is a sole proprietorship that is independently owned and controlled by an individual who is a minority group member; a joint venture that is at least 51% independently owned and controlled by minority group members; or a partnership, limited liability company or corporation that is at least 51% independently owned and controlled by minority group members;
C. The minority owners have interest in capital and earnings commensurate with the minority group members' percentage of ownership;
D. The firm performs a commercially useful function;
E. Each owner of the firm must be United States citizens or lawfully admitted permanent residents;
F. The firm has a valid and current MBE or WBE certification or both with at least one of the County-approved certification agencies (see Appendix A. Certification Agencies).

The requirements for County approved WBE certification are:

A. The applicant is an independent operating business and must have been in business for at least one year before applying for certification.
B. The owner is a sole proprietorship that is independently owned and controlled by an individual(s) who is a woman; a joint venture that is at least 51% independently owned and controlled by a woman; or a partnership, limited liability company or corporation that is at least 51% independently owned and controlled by a woman;
C. The woman owners have interest in capital and earnings commensurate with the woman's percentage of ownership;
D. The firm performs a commercially useful function;
E. Each owner of the firm must be United States citizens or lawfully admitted permanent resident;
F. The firm has a valid and current WBE certification with at least one of the County-approved certification agencies (see Appendix A. Certification Agencies).

The requirements for County approved SBE certification are:

A. The firm has gross revenues or number of employees, averaged over the past three years and inclusive of any affiliates, as defined by 13 C.F.R. Sec. 121.201, and does not exceed the size standards as defined pursuant to Section 3 of the SBE Act. A full table of the Small Business Size Standards matched to the North American Industry Classification System (NAICS) may be obtained at *www.sba.gov/size.*

B. The personal net worth of each owner and his or her spouse cannot exceed $750,000, exclusive of specified assets (equity in primary residence, retirement accounts subject to a significant withdrawal penalty, equity in the business for which they are applying).
C. The applicant for SBE certification must have been in business for at least one year before applying for certification;
D. The firm performs a commercially useful function;
E. Each owner of the firm must be United States citizens or lawfully admitted permanent residents;
F. The firm has a valid and current SBE certification with at least one of the County approved certification agencies (see Appendix A. Certification Agencies).

A business that desires approval by Hamilton County through its Economic and Community Support department as a MBE, WBE or SBE must complete and submit a County Vendor Registration form and provide a current MBE, WBE or SBE certification from a County-approved agency.

The County approves MBE, WBE, and SBE applicants in three categories:

A. Construction;
B. Professional Service;
C. Goods and Services

Section 11. Selection Criteria and Evaluation

Hamilton County will consider past compliance with MBE/WBE/SBE programs in determining contract awards.

For RFPs, selection criteria and evaluation will include a criterion for the respondent's commitment to the MBE/WBE/SBE contract goals and will be worth no less than 10% of the selection evaluation total points.

Section 12. Falsification of MBE and WBE Subcontracts

Falsification or misrepresentation of an agreement with a subcontractor as to company name, contract amount and/or actual work performed by subcontractor, submitted on any contracts or forms required or otherwise requested by the County, will result in the County utilizing any and all remedies available under the law to enforce ECS policies.

Section 13. MBE/WBE/SBE Program Noncompliance Process

If ECS or the contracting department determines that a contractor has failed to comply with the terms of the MBE/WBE/SBE programs, ECS and the contracting department shall meet

to discuss the contract, issues of noncompliance, and the options for correcting contract noncompliance.

A contractor may be found in noncompliance with the MBE/WBE/SBE Programs in the following ways without limitation:

1. By evidence found by the contracting department or by ECS through the course of regular monitoring of the execution of such contract;
2. By complaint submitted to the contracting department or ECS, where the party responsible for the complaint submits any evidence or documentation they possess in support of their claim;
3. Contractor fails to notify Hamilton County of debarment or suspension by the State of Ohio, City of Cincinnati, or any other municipality before or during the contract period.

If ECS and/or the contracting department through their discussion find evidence of noncompliance with Hamilton County's MBE/WBE/SBE programs, The Director of ECS may at this stage request that the contractor participates in a meeting to discuss its progress towards meeting its proposed MBE/WBE/SBE utilization goals. If ECS and the contractor agree on corrective measures, the contractor shall, within ten (10) business days, submit a letter to the Project Manager and Director of ECS documenting the corrective measures to be taken by the contractor along with an agreed-upon timeline for implementation.

If no agreement can be reached, ECS shall serve a written notice of MBE/WBE/SBE program noncompliance to the contractor. The written notice will include all instances of noncompliance and potential options for rectification. Contractors shall have ten (10) business days from the date of the written notice of MBE/WBE/SBE program noncompliance to determine and communicate a method for remedying all instances of noncompliance. The contractor must include within their communication a plan that is agreed to by ECS to remedy all instances of MBE/WBE/SBE program noncompliance within thirty (30) days of their response. If the contractor cannot remedy all instances within thirty (30) days of the notice of MBE/WBE/SBE program noncompliance, the Director of ECS and Program Manager, may, at their discretion, negotiate a new timeframe to achieve MBE/WBE/SBE program compliance with the contractor.

If a contractor fails to remedy all instances of MBE/WBE/SBE program noncompliance within thirty (30) days of the date of the written notice or within the newly negotiated timeframe, ECS shall make a determination of noncompliance which will be sent to the contractor in writing.

Once a determination of noncompliance is made, ECS may use all available legal remedies including but not limiting to:

a. Withhold all or part of all future payments to the contractor;
b. Require contractor payment of liquidation damages,

If appropriate, ECS will refer the matter to the appropriate authorities for potential criminal investigation and prosecution.

Section 14. Appeal Process for Determinations of Noncompliance

Any contractor who is determined to be noncompliant in connection with the performance of a contract shall be allowed ten (10) business days from receipt of the ECS notice of MBE/ WBE/SBE program noncompliance to file a written appeal of that determination. Filing of the appeal shall be accomplished by delivery (paper or electronic) of a notice of appeal to ECS. The notice of appeal by the contractor shall be in writing and shall briefly state all the facts or other basis upon which the contractor contests the ECS. finding of noncompliance. Supporting documentation must be included.

The ECS Director, with the input of the Purchasing Director and the Project Manager, shall consider the contractor's appeal and shall make a written decision no later than thirty (30) days after receipt concerning the merits of the contractor's appeal. Hamilton County staff may, at their discretion, meet with the contractor to discuss the appeal.

A copy of the appeal decision shall be sent to the contractor. If the ECS upholds the finding of noncompliance, the ECS Director shall inform the contractor of the decision which shall be final, and the appropriate penalties shall be applied.

If Hamilton County accepts the appeal, then the contractor will be informed. If Hamilton County’s determination is not made within thirty (30) days after the receipt of the appeal, then the contractor will not be held accountable.

Appendix A. Certification Agencies

Below are certification agencies we recognize as outlined in our Hamilton County Economic Inclusion Policy:

City of Cincinnati
Department of Economic Inclusion
805 Central Avenue, Suite 600
2 Centennial Plaza
Cincinnati, OH 45202
Phone: (513) 352-3154
Email: cincinnati@diversitycompliance.com
Website:
https://cincinnati.diversitycompliance.com/
Certifies SBEs, MBEs, WBEs

U.S. Small Business Administration (SBA)
Columbus District Office
8(a) Business Development Program
2 Nationwide Plaza, Suite 1400
Columbus, OH 43215
Phone: (614) 469-6860
Email: answerdesk@sba.gov
Website: *https://certify.sba.gov/*
Certifies WOSBs

Women's Business Enterprise Council Ohio River Valley (WBEC ORV)
3458 Reading Road
Cincinnati, OH 45229
Phone: (513) 487-6503
Email: crudisell@wbec-orv.org
Website: *https://www.wbecorv.org/how-to-apply/*
Certifies SBEs, WBEs

Abbreviations:
SBE- Small Business Enterprise
MBE- Minority Business Enterprise
WBE- Women's Business Enterprise

Ohio Department of Transportation (ODOT)
Office of Equal Opportunity
1980 West Broad Street
Columbus, OH 43223
Phone: (614) 644-8436 or 1-800-459-3778
Email: DOT.SDBE@dot.ohio.gov
Website: *https://www.transportation.ohio.gov/programs/business-economic-opportunity/business-economic-opportunity*
Certifies SBEs, MBEs

Ohio Minority Supplier Development Council
Chase Building
100 East Broad Street, Suite 2460
Columbus, OH 43215
Phone: (614)-225-6959, Ext.208
Email: certification@ohiomsdc.org
Website: *https://thh.3df.myftpupload.com/certificationprocess/*
Certifies SBEs, MBEs

Ohio Department of Development
Equal Opportunity Division
30 East Broad Street, 18th Floor
Columbus, OH 43215
Phone: (614) 466-838
Email:
Donald.Stinsonjr@development.ohio.gov
Website: *https://development.ohio.gov/business/minoritybusiness/certifications*
Certifies MBEs, WBEs

MBE/WBE/SBE GOAL COMPLIANCE PLAN

Failure to complete this form in its entirety may result in your bid being deemed non-responsive.

Bidder must achieve, or show good faith efforts to achieve, all goals. All sections of this form must be completed and returned as part of the bid. MBE/WBE firms that are also certified as SBEs may be used to achieve both the MBE/WBE goal and the SBE goal. Firms that are certified as both MBE and WBE will be counted towards the MBE goal and not the WBE goal. If you are not able to meet one or more of the stated goals, you must include the Application for SBE/MBE/WBE Program Waiver with your bid package.

Bidder must list the following information for **every** firm that will perform work, labor, render services, or provide materials as part of the contract or project, including certified MBE/WBE/SBE firms; non-certified small, minority-, or woman-owned firms; and any other firms. Bidder must also include any work to be self-performed and any work performed by a joint venture (JV) partner.

For projects under $1 million, bidders must submit a completed Letter of Intent (LOI) for all subcontractors/suppliers listed in their bid package at the time of submission. For larger projects over $1 million, bidders must include a completed LOI for all MBE/WBE/SBE subcontractors/suppliers listed in the Goal Compliance Plan at the time of submission. The LOI for all other subcontractors can be submitted after the time of submission, but before the contract is awarded. This applies to any subcontractors/suppliers that are substitutions or additions to the plan made after award and prior to the start of work.

Bidder must ensure that all firms whose participation is being counted towards the MBE, WBE, and SBE goals are certified as an MBE, WBE, or SBE with one of the certification agencies recognized by Hamilton County and are registered as a certified company with Hamilton County.

If you plan to perform 100% of the work yourself, you must submit the Goal Compliance Plan and indicate this in the self-performance section. In addition, you must successfully complete the the Application for Program Waiver by selecting the goals you would like to waive and signing and dating the Application for Program Waiver.

MBE/WBE/SBE GOAL COMPLIANCE PLAN

Failure to complete this form in its entirety may result in your bid being deemed non-responsive.

SUBMIT WITH BID
Section 001000
Document 001000.12

Bid Number:_____

Project Title:_____

Total Bid Amount:_____

Bidder Name:_____

Primary Contact Name:_____

Bidder Address:_____

Bidder Email:_____

Bidder Phone:_____

Certification Type (if applicable):

☐ MBE ☐ WBE ☐ SBE

Race/Ethnicity (if MBE):_____

Description of Self-Performed Work (if applicable):

Dollar Amount:_____ Percent of Total Bid:_____

STATED COMMITTMENT TO MBEs/WBEs/SBEs

MBE goal stated in solicitation:_____

Total $ amount committed to MBEs:_____

% total bid amount committed to MBEs:_____

WBE goal stated in solicitation:_____

Total $ amount committed to WBEs:_____

% total bid amount committed WBEs:_____

SBE goal stated in solicitation:_____

Total $ amount committed to SBEs:_____

% total bid amount committed to SBEs:_____

PARTICIPATING FIRMS

(Page 3 of 3)

Bidder should add additional firms using the same format as needed.

Company Name, Address, and Telephone Number	JV Partner, Subcontractor, or Supplier	Certification Type (MBE/WBE/SBE) *Select all that apply	Race/Ethnicity (if MBE)	Description of Work	Dollar Amount	Percent of Total Bid	ECS APPROVED *ECS use only
Name: Address: Phone:	☐ JV Partner ☐ Subcontractor ☐ Supplier	☐ MBE ☐ WBE ☐ SBE ☐ N/A					☐
Name: Address: Phone:	☐ JV Partner ☐ Subcontractor ☐ Supplier	☐ MBE ☐ WBE ☐ SBE ☐ N/A					☐
Name: Address: Phone:	☐ JV Partner ☐ Subcontractor ☐ Supplier	☐ MBE ☐ WBE ☐ SBE ☐ N/A					☐
Name: Address: Phone:	☐ JV Partner ☐ Subcontractor ☐ Supplier	☐ MBE ☐ WBE ☐ SBE ☐ N/A					☐
Name: Address: Phone:	☐ JV Partner ☐ Subcontractor ☐ Supplier	☐ MBE ☐ WBE ☐ SBE ☐ N/A					☐

By signing below, the Bidder certifies that the information included in this form is accurate and complete to the best of their knowledge.

Signature:_____

Date:_____

Title:_____

Company:_____

HAMILTON COUNTY MBE/WBE/SBE PROGRAMS Application for Program Waiver

At the time of bid submission, Bidders **that do not meet one or more of the MBE, WBE, or SBE goals** must request a waiver from achieving the MBE, WBE, and/or SBE goal(s) by documenting the Good Faith Efforts they made to achieve the goal(s) and document, with specificity, the Good Faith Efforts they made to achieve the goal(s). "Good Faith Efforts" means the efforts a bidder made to utilize MBEs, WBEs, and SBEs in response to the solicitation. Bidders that request a waiver must demonstrate they took reasonable steps to achieve the MBE/WBE/SBE goal(s) specified within the bid/RFP, and that the scope, intensity, and appropriateness of their efforts could reasonably be expected to result in MBE/WBE/SBE participation sufficient to achieve the goal(s), even if they were not successful in doing so. In considering waiver approval, among the totality of Good Faith Efforts bidders make, Hamilton County will consider the specific efforts the bidder made.

Bidders requesting a waiver must complete this form to document their Good Faith Efforts with specificity, or their bid will be deemed non-responsive. Every item marked on the checklist must have associated documentation in order to receive points.

HAMILTON COUNTY MBE/WBE/SBE PROGRAMS
Application for Program Waiver

SUBMIT WITH BID
Section 001000
Document 001000.13

Bid/RFP Name:_____ Bid/RFP Number: _____

Bidder Name:_____ Bidder Address:

Primary Contact Name:_____

Bidder Phone:_____ Bidder Email: _____

Bidder is requesting a waiver for: (select all that apply)

MBE goal **WBE goal** **SBE goal**

In attempting to meet the projected goal(s), the bidder made the following good faith efforts:
Check all that apply. Minimum score required to establish "good faith" effort is 70 points.

Item	Points	Score (ECS USE ONLY)
Respondent's attendance at pre-bid conference;	10	
Advertisement in general circulation media, trade publications, and minority-focused media at least two (2) weeks before bids or proposals are due;	10	
Tailored mailings to MBE/WBE/SBE firms notifying them of contracting opportunities at least two (2) weeks before bids or proposals are due;	10	
Efforts made to select portions of the work proposed to be performed by MBE/WBE/SBE firms in order to increase the likelihood of achieving the stated goal(s);	10	
Efforts to negotiate with MBE/WBE/SBE firms for specific sub-bids, including at a minimum: The names, addresses, and telephone numbers of MBE/WBE/SBE firms that were contacted; A description of the information provided to MBE/WBE/SBE firms regarding the plans and specifications for portions of the work to be performed and/or; A statement of why additional agreements with MBE/WBE/SBE firms were not reached.	15	
If the respondent rejected any MBE/WBE/SBE firm(s) as unqualified, they must submit the reason(s) for this conclusion.	10	
The respondent must also document technical assistance provided to the MBE/WBE/SBE firms in obtaining bonding or insurance required by the County.	15	
Providing interested MBE/WBE/SBEs with prompt access to the plans, specifications, scope of work, and requirements of the contract.	10	
Follow up to initial solicitations and copy of call logs.	10	
Has a joint venture agreement or partnership for the contract with an MBE/WBE/SBE firm where the commercially useful function participation by the MBE/WBE must be 30% or greater.	15	
Has a mentor-protégé agreement with an MBE/WBE/SBE firm for the contract.	10	
	TOTAL	

Document the nature of Good Faith Efforts made to achieve participation with MBEs, WBEs, and SBEs, and attach copies of any documentation of those efforts, including copies of emails, written communications, advertisements, call logs, and outcomes of in-person/telephone negotiations.

Pre-bid and Pre-solicitation Meeting Attendance

List date, time, and location of pre-bid/pre-solicitation meetings attended for this solicitation. (ECS to verify attendance using sign-in sheets.)

Meeting Date	Meeting Time	Meeting Location

Advertisements

Provide the following information for each advertisement.

Newspaper/Publication Name	Date(s) on which ad was published

Attach copies of published advertisements.

Communication Efforts to MBE/WBE/SBEs

How many MBEs did you contact? How many WBEs did you contact? How Many SBEs did you contact?

Provide the following information for each contact made:

Name and Contact of MBE/WBE/SBE	Certification Type (MBE/WBE/SBE) *list all that apply	Scope of Work / Line of Work	Dates of Contact	Contact Method	Contract Plans / Requirements	Negotiation	Selected	Reasons for Outcome
Name: Phone: Email: Address:			Initial: Follow-up:		☐ Requested ☐ Sent	☐ Yes ☐ No	☐ Yes ☐ No	
Name: Phone: Email: Address:			Initial: Follow-up:		☐ Requested ☐ Sent	☐ Yes ☐ No	☐ Yes ☐ No	
Name: Phone: Email: Address:			Initial: Follow-up:		☐ Requested ☐ Sent	☐ Yes ☐ No	☐ Yes ☐ No	
Name: Phone: Email: Address:			Initial: Follow-up:		☐ Requested ☐ Sent	☐ Yes ☐ No	☐ Yes ☐ No	
Name: Phone: Email: Address:			Initial: Follow-up:		☐ Requested ☐ Sent	☐ Yes ☐ No	☐ Yes ☐ No	

Attach additional pages using the same format as necessary. ***Attach copies of all correspondence.***

Assistance to MBE/WBE/SBEs (including bonding, insurance, financial equipment, or other resources

Provide information below regarding any assistance provided to MBE/WBE/SBEs in obtaining bonding and insurance required for the solicitation.

Name and Contact of MBE/WBE/SBE	Certification Type (MBE/WBE/SBE) *list all that apply	Type of Assistance Provided
Name: Phone: Email: Address:		
Name: Phone: Email: Address:		
Name: Phone: Email: Address:		

Attach additional pages using the same format as necessary.

Segmenting Scope(s) of Work for MBE/WBE/SBE Participation

Describe efforts made to segment scope(s) of work to enable MBE/WBE/SBE participation.

Joint Venture Agreements with MBE/WBE/SBEs

List MBE/WBE/SBEs involved in the joint venture agreement.

Name and Contact of MBE/WBE/SBE	Certification Type (MBE/WBE/SBE) *list all that apply	Scope of Work	% of Total Bid
Name: Phone: Email: Address:			
Name: Phone: Email: Address:			
Name: Phone: Email: Address:			

Attach agreement documents for the joint venture agreement.

Mentor-Protégé Agreements with MBE/WBE/SBEs

List any mentor-protégé agreements with MBE/WBE/SBEs and provide supporting documentation.

Name and Contact of MBE/WBE/SBE	Certification Type (MBE/WBE/SBE) *list all that apply	Describe nature of mentor-protégé agreement
Name: Phone: Email: Address:		
Name: Phone: Email: Address:		

By signing below, the Bidder agrees that the information included in this form is accurate and complete to the best of their knowledge:

Signature: _____

Printed Name: _____

Title/Position: _____

Date: _____

FOR ECS USE ONLY

Application for Program Waiver approved:

☐ Yes ☐ No

If no, provide reasons for rejection:

Director of ESC Signature: _____ **Date:** _____

Appendix B.3 Letter of Intent (LOI) Between Prime Contractor and Subcontractor/Supplier

Letter of Intent (LOI)
Between Prime Contractor and
Subcontractor/Supplier

(Page 1 of 3)

The following Letter of Intent (LOI) is to be used by Prime Contractors and their subcontractors/suppliers. For projects under $1 million, signed and notarized LOIs between Bidder and all subcontractors/supplies must be included in their Goal Compliance Plan at the time of submission. For larger projects above $1 million, bidders must submit a completed LOI for all MBE/WBE/SBE subcontractors/suppliers listed in the Goal Compliance Plan at the time of submission. The LOI for all other subcontractors can be submitted after the time of submission, but before the contract is awarded. Submit a separate form for each distinct subcontractor/supplier.

Any changes to the MBE/WBE/SBE Goal Compliance Plan, including substitution or addition of an MBE/WBE/SBE subcontractor/supplier must be submitted to the Contract Administrator and approved by Hamilton County's Director of Economic & Community Support (ECS). LOIs must be submitted prior to the start of work for changes of MBE/WBE/SBEs stated in the Goal Compliance Plan.

Letter of Intent (LOI) Between Prime Contractor and Subcontractor/Supplier

SUBMIT WITH BID
Section 001000
Document 001000.14

Prime Contractor:_____

Address:_____

City:_____ State:_____ Zip:_____

Telephone:_____ Fax:_____ Proposed Contract Amount: $ _____

Project Solicitation Number: _____

Project Name: _____

Type of Agreement: _____
(Lump Sum/Unit Price/Commodity/Professional Service)

Period of Performance: _____

Name of Subcontractor/Supplier: _____

Certification Type (select all that apply): ☐ MBE ☐ WBE ☐ SBE ☐ N/A

Address:_____

City:_____ State:_____ Zip:_____

Telephone:_____ Fax:_____ Proposed Contract Amount: $ _____

Description of work to be performed under Subcontract:

By signing below, the Prime Contractor and the subcontractor/supplier agree that they intend to enter into a contract by which the Prime Contractor agrees to pay the contract amount and the subcontractor/supplier agrees to perform the work described herein.

SUBMIT WITH BID
Section 001000
Document 001000.14

Prime Contractor: _____

Name of Firm: _____

By: _____ Title: _____
(Signature)

Print Name: _____ Date: _____

Subcontractor/Supplier: _____

Name of Firm: _____

By: _____ Title: _____
(Signature)

Print Name: _____ Date: _____

STATE OF _____

COUNTY OF _____

SUBSCRIBED AND SWORN TO before me on the _____ day of _____, 20____

Notary Public _____

Printed Name of Notary _____

WARRANTY AGAINST AN UNRESOLVED FINDING FOR RECOVERY

Document 001000.15

In accordance with Section 9.24 of the Ohio Revised Code, I hereby certify that the company I represent does not owe any money to the State of Ohio.

_____
SIGNATURE

_____
PRINT NAME

_____
TITLE

TO BE COMPLETED BY NOTARY PUBLIC

On _____, there appeared before me
DATE

_____**,** saying that he/she is
PRINT NAME

_____ _____ of,
PRINT TITLE

_____
PRINT NAME OF COMPANY

and that he/she understands all of the implications of the above statement and has signed

in good faith.

_____
SIGNATURE OF NOTARY PUBLIC

Prime Contractor Substitution Request Form

(Page 1 of 4)

APPLICABLE POST AWARD

No changes to the *MBE/WBE/SBE Goal Compliance Plan* are permitted after submittal of the Bid and before the award of the Trade Contract. After Trade Contract award, changes to the *MBE/WBE/SBE Goal Compliance Plan* must be requested through the Contract Administrator and approved by Hamilton County's Director of Economic and Community Support (ECS).

Submission and Evaluation of Requests

Where a Bidder discovers after award of the Trade Contract that the *MBE/WBE/SBE Goal Compliance Plan* must be changed or a substitution must occur, the Bidder must request changes through the Contract Administrator and receive approval by the Director of ECS using the attached form. The form must be notarized.

The written request must state specific reasons for the proposed change or substitution. Sworn statements from the subcontractor/supplier to be substituted stating why it cannot perform on the Project may be submitted to support the request. The facts supporting the request must not have been known nor reasonably should have been known by the Bidder and/or proposed subcontractor/supplier prior to the submission of the *MBE/WBE/SBE Goal Compliance Plan*.

The following conditions constitute examples of acceptable reasons for changes:

- Unavailability of subcontractor/supplier after receipt of reasonable notice to proceed;
- Failure to perform the scope(s) of work;
- Financial incapacity;
- Failure to honor bid or proposal price within a reasonable period of time after original submittal;
- Failure of subcontractor/supplier to meet bonding, insurance, or licensing requirements specified in the solicitation;
- Withdrawal of bid or proposal by subcontractor/supplier;
- When the County determines that it is in the best interest of the Program and the County.

Where the reason is a valid mistake or disagreement on the scope(s) of work, the request must document all efforts made by the parties to reach an agreement for a reasonable price for the corrected scope(s) of work.

Good Faith Efforts on Substitutions and Additions of MBE/WBE/SBE Subcontractor/Suppliers

When a change or substitution of an MBE/WBE/SBE is requested, the Prime Contractor still must continue to make Good Faith Efforts to meet the goal as submitted in the *MBE/WBE/SBE Goal Compliance Plan*.

Prime Contractor Substitution Request Form

Project Solicitation Number:_____ Date:_____

Project Name: _____

Prime Contractor:_____

Total Trade Contract Price:_____

Participation Goals Stated in Solicitation: MBE: _____WBE: _____SBE:_____

Actual Participation Prior to Proposed Change: MBE:_____ WBE:_____ SBE:_____

Participation After Proposed Change: MBE: _____WBE:_____ SBE:_____

The Prime Contractor on the above Project requests approval of the following addition and/or deletion of subcontractor/suppliers as submitted in the MBE/WBE/SBE Goal Compliance Plan included in the Bid. (Submit a separate form for each proposed change.)

PROPOSED DELETION:

Name of subcontractor/supplier:_____

Certification Type (select all that apply): ☐ MBE ☐ WBE ☐ SBE ☐ N/A

Address:_____

City:_____ State:_____ Zip:_____

Contact Person:_____ Telephone Number:_____

Amount of Subcontract: $_____ Percent of Trade Contract: _____

Description of Work:_____

PROPOSED ADDITION: *Attach Good Faith Efforts documentation, if applicable. See preceding page for instructions.*

Name of subcontractor/supplier: _____

Certification Type (select all that apply): ☐ MBE ☐ WBE ☐ SBE ☐ N/A

Address: _____

City: _____ State: _____ Zip: _____

Contact Person: _____ Telephone Number: _____

Amount of Subcontract: $ _____ Percent of Trade Contract: _____

Description of Work: _____

REASONS FOR REQUESTING CHANGE: Attach supporting documentation as necessary. A statement from the subcontractor/supplier to be removed stating why it cannot perform on the Project may be submitted to support the request.

AFFIDAVIT

The above information is true and complete to the best of my knowledge and belief. I further understand and agree that this affidavit shall become a part of my Trade Contract with Hamilton County.

Name and Title (Print): _____

Signature: _____ Date: _____

State of: _____

County of: _____

On the _____day of _____. 20____, _____ personally appeared and having been duly sworn by me, subscribed to the foregoing affidavit and has stated that the facts stated therein are true and correct.

Notary Public: _____

Printed Name of Notary: _____

FOR ECS USE ONLY:

Substitution Request Form Approved:

☐ Yes ☐ No

COMMENTS:

Director of ECS Signature: _____ **Date:** _____

DOCUMENT 001000.17

Responsible Bidder Certification

Project: Paycor Stadium South Scoreboard Facade BP#5

_____
Name of Bidder

ITB#078-26

_____ Bid Reference No._____
Address of Bidder

_____
Date

_____ ("Bidder") hereby certifies to the Board of County Commissioners of Hamilton County, Ohio ("County") that it will adhere to the Responsible Bidder Requirements (the "Responsible Bidder Requirements") set forth in the Bid Documents, and does hereby further certify to the County the following:

1. Bidder will require all contractors who bid or perform any work pursuant to the contract on which the Bidder is bidding to satisfy all of the Responsible Bidder Requirements set forth in the Project Manual.

2. Bidder will pay prevailing wages as set forth in the Project Manual and Bid Documents for the Project.

3. Prior to award of a contract or subcontract of Two Hundred and Fifty Thousand Dollars ($250,000) or more, the Bidder will engage in a review of the constructability and scope of the bid to verify that the contractor included all required work.

4. In the event Bidder submits the lowest bid and such bid is more than twenty percent (20%) below the bid of the next lowest bidder, the Bidder shall identify three (3) construction projects that it has successfully completed within five (5) years of the Bid date.

5. Bidder will employ supervisory personnel on the project that (a) are qualified to perform in such supervisory capacity and (b) have any license or licenses required by applicable law to perform in such capacity.

6. Bidder is not currently debarred from performing state or federal construction contracts (after all appeals), because of a violation of the Fair Labor Standards Act and/or any state or federal prevailing wage law. A list of every occasion on which Bidder has been debarred from performing local, state or federal

construction contracts (after all appeals), because of a violation of the Fair Labor Standards Act and/or any state of federal prevailing wage law, during the last ten years, if any such debarments have occurred, are listed below:

_____ _____

_____ _____

7. Bidder, and each of its subcontractors have implemented an OSHA-compliant Safety Program which includes: a) with respect to all supervisors, completion of OSHA's thirty (30) hour safety course; and b) with respect to all field employees, completion of OSHA's ten (10) hour safety program. Bidder shall provide evidence of implementation of an OSHA-compliant safety program to the Construction Manager.

8. Bidder has implemented a substance-abuse policy that is in compliance with Ohio's Drug Free Workplace Requirements. Bidder will provide evidence of implementation of such policies to the Construction Manager.

9. Bidder has all licenses required by applicable state law and regulation to perform work required herein.

10. Any and all professional license or licenses that have been revoked by Ohio or revoked by any other state within five (5) years prior to the Bid date as listed below:

_____ _____

_____ _____

11. Bidder has no final judgments against it which are not secured by payment bond or other surety at the time of award which are equal to or exceed fifty percent (50%) of the Bidder’s net worth.

12. Bidder has complied with applicable unemployment and workers compensation laws for at least two (2) years preceding the date of bid submittal.

13. Bidder will not subcontract more than seventy percent (70%) of the bid amount of the Contract. Bidder acknowledges it may apply for a waiver of the foregoing requirement by the County, which waiver shall be subject to the review and approval of the County.

14. Bidder does not have an Experience Modification Rating of more than 1.3 (a penalty rated employer) with respect to the Ohio Bureau of Workers’ Compensation risk assessment rating.

15. Bidder is not debarred from bidding on the contracts that are the subject of this bid.

16. Bidder herby acknowledges and agrees that bidder's falsification of any of the certifications herein or failure to comply with the requirements set forth herein, shall be the basis for a default termination of the Contract.

State of _____)
)ss.
County of _____)

BY: _____
ITS: _____

Sworn to and subscribed by _____ in my presence this _____ day of _____ 202__.

_____
NOTARY PUBLIC

DOCUMENT 001000.18

TAX EXEMPT STATEMENT

Purchases of building and construction materials and services by Contractor for incorporation into the Work or a portion of the Work that constitutes a structure or improvement to real property are not subject to Ohio sales or use tax pursuant to Ohio Revised Code 5739.02(B)(B)(13) and 5741.02(C)(2). Purchases by Contractor of expendable items or items consumed by Contractor in performance of the Work are not incorporated into a structure or improvement to real property and are not exempt from Ohio sales or use taxes as provided above. Examples of such purchases include, but are not limited to, form lumber, tools, oils, greases, fuel, equipment and trailer rental, temporary fencing and temporary road materials and temporary power equipment.

Signature:_____

Document 001000.21

CERTIFIED CHECK

If you are submitting a Certified Check: **Check #**_____dollars

drawn on _____ **bank** is herewith submitted and deposited in lieu of bond under the same terms and conditions as set forth.

PRINT NAME_____ of,

PRINT NAME OF COMPANY _____

Date

SIGNATURE

Document 001000.22

REGISTRATION FORM
PLEASE READ AND ACKNOWLEDGE RECEIPT OF THIS DOCUMENT

ITB#:078-26 –Paycor Stadium South Scoreboard Facade BP#5 Package– GR

All inquiries regarding this ITB are to be e-mailed or mailed to:
Gina Richmond
138 E. Court Street, Room 507
Cincinnati, Ohio 45202
Email: Purchasing@hamiltoncountyohio.gov

The County will not entertain any oral questions regarding this ITB/RFP. Other than specified above, no bidder may contact any county official, employee, project team member or evaluation team member. Bidders are not to schedule appointments or have contact with any of the individuals connected to or having decision-making authority regarding the award of this ITB/RFP. **Inappropriate contact including attempts to influence the ITB/ RFP process, evaluation process or the award process by bidders or by others on their behalf will result in bid/proposal rejection.**

The only appropriate contact is with the Purchasing Department as listed above.

Have you been banned from doing business with the State of Ohio? _____

Is your company a Small/Minority/Women Owned Business? _____
If yes, please specify any certifications:

_____

Please e-mail this page to the Purchasing Department as soon as possible.

By e-mailing this page to the Purchasing Department, you will be registering your company's interest in this ITB/RFP, attendance at pre-bid conference, and it will ensure you will receive all addenda or correspondence. Your signature is an acknowledgement that you have read and understand the information contained on this page. Hamilton County will not be responsible for the timeliness of the delivery via U.S. Mail

DATE:	
COMPANY NAME:	
ADDRESS:	
CITY, STATE & ZIP CODE:	
SALES REPRESENTATIVE'S NAME:	
TELEPHONE NUMBER:	
EMAIL ADDRESS:	
NUMBER OF PEOPLE ATTENDING PREBID (IF APPLICABLE):	
SIGNATURE:	

ATTACHMENT F
PREVAILING WAGE RATES

PART 1 GENERAL

1.1 SUMMARY

The current Ohio Prevailing Wage Rates shall apply for all contractors on this project in accordance with ORC Chapter 4115 as established by the Ohio Department of Commerce.

A. Prevailing Wage Rate data dated October 1, 2026 is attached as Exhibit E.

PART 2 PRODUCTS

Not Used

PART 3 EXECUTION

Not Used

END OF SECTION

Department of Commerce
Division of Industrial Compliance

Affidavit of Compliance

Prevailing Wages

I, _____
(Name of person signing affidavit) (Title)

do hereby certify that the wages paid to all employees of

_____
(Company Name)

for all hours worked on the

_____
(Project name and location)

project, during the period from _____ to _____ are in
(Project Dates)

compliance with prevailing wage requirements of Chapter 4115 of the Ohio Revised Code. I further certify that no rebates or deductions have been or will be made, directly or indirectly, from any wages paid in connection with this project, other than those provided by law.

_____
(Signature of Officer or Agent)

Sworn to and subscribed in my presence this _____ day of _____, 20_____.

_____ (Notary Public)

The above affidavit must be executed and sworn to by the officer or agent of the contractor or subcontractor who supervises the payment of employees. This affidavit must be submitted to the owner (public authority) before the surety is released or final payment due under the terms of the contract is made.

PREVAILING WAGE THRESHOLD LEVELS
IMPORTANT NOTICE

Before advertising for bids, contracting, or undertaking construction with its own forces, to construct a public improvement, the Public Authority shall have the Ohio Department of Commerce-Division of Industrial Compliance, Bureau of Wage and Hour Administration determine the prevailing rates of wages for workers employed on the public improvement. The wage determination must be included in the project specifications and printed on the bidding blanks where work is done by contract.

"New" construction threshold for Building Construction:	**$250,000**

"Reconstruction, enlargement, alteration, repair, remodeling, renovation, or painting" threshold level for Building Construction:	**$75,000**

As of January 1, 2026:

"New" construction that involves roads, streets, alleys, sewers, ditches and other works connected to road or bridge construction threshold level has been adjusted to:	**$101,201**

"Reconstruction, enlargement, alteration, repair, remodeling, renovation, or painting" that involves roads, streets, alleys, sewers, ditches and other works connected to road or bridge construction threshold level has been adjusted to:	**$30,320**

A) Thresholds are to be adjusted biennially by the Director of the Ohio Department of Commerce.
B) Biennial adjustments to threshold levels are made according to the Building Cost for Skilled Labor Index published by McGraw-Hill's Engineering News-Record, but may not increase or decrease more than 3% for any year.

If there are questions concerning this notification, please contact:
Bureau of Wage and Hour Administration
6606 Tussing Road, PO Box 4009
Reynoldsburg, Ohio 43068-9009
Phone: 614-644-2239
Fax: 614-728-8639
www.com.ohio.gov

Section 001000
Document 001000.23

An Official State of Ohio site. Here's how you know

Search Prevailing Wage Rates

To view the current commercial prevailing wage rates:

- Select the county that the prevailing wage project takes place in.
- Counties with an asterisk (*) include rates that only cover part of that county. See "Special Jurisdictional Note" on the wage rate sheet for more information.
- Be sure to check both the county with an asterisk (*) and without for a full list of rates for that county.

To download wage rates:

- Select the wage rates that you would like to download.
- Click 'DOWNLOAD (PDF)'.

Please note: You can only download 100 rates at a time and the PDF download process may take some time to complete. Kindly remain on this page while your file is being generated.

Notice: If you are selecting a county and no rates are pulling up, your session has most likely timed out. Please log out of the portal, restart your browser, and log back in. In the future, log out of the portal before closing the application to prevent a session timeout issue.

Select a County: Hamilton DOWNLOAD (PDI

Union ↑	Classification	Wage Rate Type	Effective Date	Posted Date	
Asbestos Local 207	Asbestos Worker	Commercial	07/08/2026	07/08/2026	View
Asbestos Local 8 Heat & Frost Insulators	Asbestos Worker	Commercial	03/04/2026	03/04/2026	View
Boilermaker Local 105	Boilermaker	Commercial	10/01/2013	09/25/2013	View
Bricklayer Local 23 (Cincinnati)	Bricklayer	Commercial	07/15/2026	07/15/2026	View
Bricklayer Local 23 Heavy Hwy (A)	Bricklayer	Commercial	06/10/2026	06/10/2026	View
Bricklayer Local 23 Heavy Hwy (B)	Bricklayer	Commercial	06/10/2026	06/10/2026	View
Bricklayer Local 23 Tile Finisher	Bricklayer	Commercial	09/01/2023	08/30/2023	View
Bricklayer Local 23 Tile Mechanic	Bricklayer	Commercial	09/01/2023	08/30/2023	View
Carpenter & Pile Driver SW District HevHwy	Carpenter	Commercial	05/01/2026	04/29/2026	View
Carpenter & Pile Driver SW Zone 2	Carpenter	Commercial	06/10/2026	06/10/2026	View

	Union	Classification	Wage Rate Type	Effective Date	Posted Date	
	Carpenter Locals 2 & 136 Floorlayer SW	Carpenter	Commercial	09/09/2026	09/09/2026	View
	Carpenter Millwright Local 1090 SW Zone I	Carpenter	Commercial	09/10/2025	09/10/2025	View
	Cement Mason Local 132 (Cincinnati)	Cement Mason	Commercial	06/03/2026	06/03/2026	View
	Cement Mason Local 132 Hev Hwy (Cincinnati)	Cement Mason	Commercial	05/01/2026	04/29/2026	View
	Electrical Local 212 Inside	Electrical	Commercial	06/01/2026	05/27/2026	View
	Electrical Local 212 Inside Lt Commercial South West	Electrical	Commercial	01/01/2024	12/27/2023	View
	Electrical Local 212 Voice Data Video	Electrical	Commercial	12/03/2025	12/03/2025	View
	Electrical Local 71 High Tension Pipe Type Cable	Electrical	Commercial	01/07/2026	01/07/2026	View
	Electrical Local 71 Outside Cincinnati	Electrical	Commercial	06/04/2025	06/04/2025	View
	Electrical Local 71 Outside Utility Power	Electrical	Commercial	01/07/2026	01/07/2026	View
	Electrical Local 71 Underground Residential Distribution	Electrical	Commercial	01/07/2026	01/07/2026	View
	Electrical Local 71 Voice Data Video Outside	Electrical	Commercial	03/06/2024	03/06/2024	View
	Elevator Local 11	Elevator	Commercial	03/18/2026	03/18/2026	View
	Glazier Local 387	Glazier	Commercial	11/19/2025	11/19/2025	View
	Ironworker Local 44	Ironworker	Commercial	06/01/2026	05/27/2026	View
	Labor HevHwy 3	Laborer	Commercial	05/01/2026	04/29/2026	View
	Labor Local 265 Building	Laborer	Commercial	06/10/2026	06/10/2026	View
	Labor Local 265A Mason Tender	Laborer	Commercial	06/10/2026	06/10/2026	View
	Operating Engineers - Building Local 18 - Zone III	Operating Engineer	Commercial	05/01/2026	04/29/2026	View
	Operating Engineers - HevHwy Zone II	Operating Engineer	Commercial	05/01/2026	04/29/2026	View
	Painter Local 123 & 238 Commercial & Industrial	Painter	Commercial	06/17/2026	06/17/2026	View
	Painter Local 123 & 238 Drywall	Painter	Commercial	05/01/2026	04/29/2026	View
	Painter Local 123 & 238 Hvy Hwy	Painter	Commercial	06/17/2026	06/17/2026	View
	Painter Local 639 Sign and Display	Painter	Commercial	06/18/2025	06/18/2025	View
	Painter Local 639 Zone 2 Sign	Painter	Commercial	05/28/2025	05/28/2025	View
	Plasterer Local 132 (Cincinnati)	Plasterer	Commercial	07/01/2026	07/01/2026	View

	Union	Classification	Wage Rate Type	Effective Date	Posted Date	
☐	Plumber Pipefitter Local 392	Plumber Pipefitter	Commercial	06/01/2026	05/27/2026	View
☐	Roofer Local 42	Roofer	Commercial	09/02/2026	09/02/2026	View
☐	Sheet Metal Local 24 (Cincinnati)	Sheet Metal Worker	Commercial	08/05/2026	08/05/2026	View
☐	Sprinkler Fitter Local 669	Sprinkler Fitter	Commercial	08/06/2025	08/06/2025	View
☐	Truck Driver Locals 20,40,92,100,175,284,348,377,637,697,908,957 - Bldg & HevHwy Class 1	Truck Driver	Commercial	05/01/2026	04/29/2026	View
☐	Truck Driver Locals 20,40,92,100,175,284,348,377,637,697,908,957 - Bldg & HevHwy Class 2	Truck Driver	Commercial	05/01/2026	04/29/2026	View

Prevailing Wage Rate
Skilled Crafts

Name of Union: Asbestos Local 207

Type of Rate: Commercial

Change #: LCN01-2026ib

Craft: Asbestos Worker

Effective Date: 7/8/2026

Effective Date: 7/8/2026

	BHR		Fringe Benefit Payments						Irrevocable Fund		Total PWR	Overtime Rate
			H&W	Pension	App Tr.	Vac.	Annuity	Other	LECET (*)	MISC (*)		
Classification												
Asbestos Abatement	$35.25		$11.20	$7.50	$1.00	$4.00	$0.00	$0.05	$0.00	$0.00	$59.00	$76.63
Apprentice	BHR	Percent										
Trainee 1 Year - 600 Hrs	$25.00	$70.92	$11.20	$1.90	$1.00	$1.00	$0.00	$0.05	$0.00	$0.00	$40.15	$52.65

(*)Special Calculation Note :

Other: Drug Testing

Ratio :

3 Journeymen to 1 Trainee

Jurisdiction (* denotes special jurisdictional note) :

Adams, Ashland, Ashtabula*, Athens, Auglaize, Brown, Butler*, Carroll, Champaign, Clark, Clermont, Clinton, Columbiana, Coshocton, Crawford, Cuyahoga, Darke, Delaware, Erie*, Fairfield, Fayette, Franklin, Geauga, Greene, Guernsey, Hamilton, Hardin, Harrison, Highland, Hocking, Holmes, Huron, Knox, Lake, Licking, Logan, Lorain, Madison, Mahoning, Marion, Medina, Miami, Montgomery, Morgan, Morrow, Muskingum, Noble, Perry, Pickaway, Portage, Preble, Richland, Ross, Shelby, Stark, Summit, Trumbull, Tuscarawas, Union, Vinton, Warren*, Wayne

Special Jurisdictional Note :

Ashtabula County: (post offices & townships of Ashtabula, Austinburg, Geneva, Harperfield, Jefferson, Plymouth & Saybrook) (townships of Andover, Cherry Valley, Colbrook, Canneaut, Denmark, Dorset, East Orwell, Hartsgrove, Kingville, Lenox, Monroe,Morgan,New Lyme,North Kingsville, Orwell, Pierpoint, Richmond Rock Creek, Rome, Shefield, Trumbull, Wayne, Williamsfield & Windsor)

Butler County: (townships of Fairfield, Hanover, Liberty, Milford, Morgan, Oxford, Ripley, Ross, St. Clair, Union & Wayne) (Lemon & Madison)

Erie County: (post offices & townships of Berlin, Berlin Heights,Birmingham,Florence, Huron, Milan, Shinrock & Vermilion)

Warren County: (townships of: Deerfield, Hamilton, Harlan, Salem, Union & Washington) (Clear Creek, Franklin, Mossie, Turtle Creek & Wayne)

Details :

An Abatement Journeyman is anyone who has more than 600 hours in the Asbestos Abatement field.

Asbestos & lead paint abatement including, but not limited to the removal or encapsulation of asbestos & lead paint, all work in conjunction with the preparation of the removal of same & all work in conjunction with the clean up after said removal. The removal of all insulation materials, whether they contain asbestos or not, from mechanical systems (pipes, boilers, ducts, flues, breaching, etc.) is recognized as being the exclusive work of the Asbestos Abatement Workers.

On all mechanical systems (pipes, boilers, ducts, flues, breaching, etc.) that are going to be demolished, the removal of all insulating materials whether they contain asbestos or not shall be the exclusive work of the Laborers.

Prevailing Wage Rate
Skilled Crafts

Name of Union: Asbestos Local 8 Heat & Frost Insulators

Type of Rate: Commercial

Change #: LCN01-2026ib

Craft: Asbestos Worker

Effective Date: 3/4/2026

Effective Date: 3/4/2026

	BHR		Fringe Benefit Payments						Irrevocable Fund		Total PWR	Overtime Rate
			H&W	Pension	App Tr.	Vac.	Annuity	Other	LECET (*)	MISC (*)		
Classification												
Asbestos Insulators	$36.33		$9.74	$9.35	$0.45	$0.00	$4.50	$0.00	$0.00	$0.00	$60.37	$78.53
Apprentice Rates for those that began BEFORE March 1, 2024	$		$	$	$	$	$	$	$	$	$	$
1st Year	$19.98		$9.74	$5.10	$0.45	$0.00	$4.50	$0.00	$0.00	$0.00	$39.77	$49.76
2nd Year	$21.80		$9.74	$6.65	$0.45	$0.00	$4.50	$0.00	$0.00	$0.00	$43.14	$54.04
3rd Year	$23.61		$9.74	$6.65	$0.45	$0.00	$4.50	$0.00	$0.00	$0.00	$44.95	$56.75
4th Year	$25.43		$9.74	$6.65	$0.45	$0.00	$4.50	$0.00	$0.00	$0.00	$46.77	$59.48
Apprentice	BHR	Percent										
1st Year	$19.98	$55.00	$9.74	$5.10	$0.45	$0.00	$0.00	$0.00	$0.00	$0.00	$35.27	$45.26
2nd Year	$21.80	$60.00	$9.74	$6.65	$0.45	$0.00	$0.00	$0.00	$0.00	$0.00	$38.64	$49.54
3rd Year	$23.61	$65.00	$9.74	$6.65	$0.45	$0.00	$4.50	$0.00	$0.00	$0.00	$44.95	$56.75
4th Year	$25.43	$70.00	$9.74	$6.65	$0.45	$0.00	$4.50	$0.00	$0.00	$0.00	$46.77	$59.48

(*)Special Calculation Note :

Ratio :

1 Journeyman to 1 Apprentice
2 Journeymen to 2 Apprentices
3 Journeymen to 3 Apprentices
3 Journeymen to 1 Apprentice thereafter

Jurisdiction (* denotes special jurisdictional note) :

Adams, Brown, Butler*, Clermont, Hamilton, Highland, Warren*

Special Jurisdictional Note :

In Butler County: townships of Fairfield, Hanover, Liberty, Milford, Morgan, Oxford, Ripley, Ross, St.Clair, Union & Wayne.

In Warren County: Townships of Deerfield, Hamilton, Harlan, Salem, Union & Washington.

Details :

All work in connection with Asbestos Removal, Abatement, Encapsulation, Lead Abatement, Hazardous Materials and Fire Stopping which is performed by employees in the Mechanic or Apprentice Classification shall be covered under the terms of this Agreement..

Prevailing Wage Rate
Skilled Crafts

Name of Union: Boilermaker Local 105

Type of Rate: Commercial

Change #: LCN02-2013fb

Craft: Boilermaker

Effective Date: 10/1/2013

Effective Date: 10/1/2013

	BHR		Fringe Benefit Payments						Irrevocable Fund		Total PWR	Overtime Rate
			H&W	Pension	App Tr.	Vac.	Annuity	Other	LECET (*)	MISC (*)		
Classification												
Boilermaker	$35.26		$7.07	$13.28	$0.89	$0.00	$3.00	$0.55	$0.00	$0.00	$60.05	$77.68
Apprentice	BHR	Percent										
1st 6 months	$24.69	$70.03	$7.07	$11.30	$0.89	$0.00	$2.10	$0.55	$0.00	$0.00	$46.60	$58.95
2nd 6 months	$26.45	$75.02	$7.07	$11.30	$0.89	$0.00	$2.25	$0.55	$0.00	$0.00	$48.51	$61.74
3rd 6 months	$28.21	$80.00	$7.07	$11.30	$0.89	$0.00	$2.40	$0.55	$0.00	$0.00	$50.42	$64.52
4th 6 months	$29.98	$85.02	$7.07	$11.30	$0.89	$0.00	$2.55	$0.55	$0.00	$0.00	$52.34	$67.33
5th 6 months	$30.86	$87.52	$7.07	$13.28	$0.89	$0.00	$2.63	$0.55	$0.00	$0.00	$55.28	$70.71
6th 6 months	$31.74	$90.03	$7.07	$13.28	$0.89	$0.00	$2.70	$0.55	$0.00	$0.00	$56.23	$72.11
7th 6 months	$32.62	$92.50	$7.07	$13.28	$0.89	$0.00	$2.78	$0.55	$0.00	$0.00	$57.19	$73.49
8th 6 months	$33.50	$95.00	$7.07	$13.28	$0.89	$0.00	$2.85	$0.55	$0.00	$0.00	$58.14	$74.89

(*)Special Calculation Note :

Other is Supplemental Health and Welfare

Ratio :

5 Journeymen to 1 Apprentice

Jurisdiction (* denotes special jurisdictional note) :

Adams, Athens, Brown, Butler, Champaign, Clark, Clermont, Clinton, Fairfield, Fayette, Franklin, Gallia, Greene, Guernsey, Hamilton, Highland, Hocking, Jackson, Lawrence, Licking, Madison, Meigs, Miami, Montgomery, Morgan, Muskingum, Noble, Perry, Pickaway, Pike, Preble, Ross, Scioto, Vinton, Warren

Special Jurisdictional Note :

Details :

Prevailing Wage Rate
Skilled Crafts

Name of Union: Bricklayer Local 23 (Cincinnati)

Type of Rate: Commercial

Change #: LCN01-2026ib

Craft: Bricklayer

Effective Date: 7/15/2026

Effective Date: 7/15/2026

	BHR		Fringe Benefit Payments						Irrevocable Fund		Total PWR	Overtime Rate
			H&W	Pension	App Tr.	Vac.	Annuity	Other	LECET (*)	MISC (*)		
Classification												
Bricklayer	$37.35		$11.09	$7.29	$0.90	$0.00	$0.00	$0.00	$0.00	$0.00	$56.63	$75.31
Stone Mason	$37.35		$11.09	$7.29	$0.90	$0.00	$0.00	$0.00	$0.00	$0.00	$56.63	$75.31
Pointer Caulker Cleaner	$37.35		$11.09	$7.29	$0.90	$0.00	$0.00	$0.00	$0.00	$0.00	$56.63	$75.31
Refractory Workers	$38.35		$11.09	$7.29	$0.90	$0.00	$0.00	$0.00	$0.00	$0.00	$57.63	$76.81
Refractory Worker Hot Pay	$40.35		$11.09	$7.29	$0.90	$0.00	$0.00	$0.00	$0.00	$0.00	$59.63	$79.81
Sawman	$37.60		$11.09	$7.29	$0.90	$0.00	$0.00	$0.00	$0.00	$0.00	$56.88	$75.68
Layout Man	$37.60		$11.09	$7.29	$0.90	$0.00	$0.00	$0.00	$0.00	$0.00	$56.88	$75.68
Free Standing Chimney	$37.85		$11.09	$7.29	$0.90	$0.00	$0.00	$0.00	$0.00	$0.00	$57.13	$76.06
Apprentice	BHR	Percent										
1st 6 months	$26.15	$70.02	$11.09	$7.29	$0.90	$0.00	$0.00	$0.00	$0.00	$0.00	$45.43	$58.50
2nd 6 months	$27.65	$74.02	$11.09	$7.29	$0.90	$0.00	$0.00	$0.00	$0.00	$0.00	$46.93	$60.75
3rd 6 months	$29.13	$78.00	$11.09	$7.29	$0.90	$0.00	$0.00	$0.00	$0.00	$0.00	$48.41	$62.97
4th 6 months	$30.63	$82.02	$11.09	$7.29	$0.90	$0.00	$0.00	$0.00	$0.00	$0.00	$49.91	$65.22
5th 6 months	$32.13	$86.02	$11.09	$7.29	$0.90	$0.00	$0.00	$0.00	$0.00	$0.00	$51.41	$67.48
6th 6 months	$33.62	$90.00	$11.09	$7.29	$0.90	$0.00	$0.00	$0.00	$0.00	$0.00	$52.90	$69.71
7th 6 months	$35.12	$94.02	$11.09	$7.29	$0.90	$0.00	$0.00	$0.00	$0.00	$0.00	$54.40	$71.96
8th 6 months	$36.60	$98.00	$11.09	$7.29	$0.90	$0.00	$0.00	$0.00	$0.00	$0.00	$55.88	$74.18
MASON FINISHER 1-90 Days	$16.81	$45.00	$0.00	$0.00	$0.00	$0.00	$0.00	$0.00	$0.00	$0.00	$16.81	$25.21
90-365 Days	$16.81	$45.00	$11.09	$0.00	$0.00	$0.00	$0.00	$0.00	$0.00	$0.00	$27.90	$36.30
366+ Days	$18.68	$50.00	$11.09	$0.00	$0.00	$0.00	$0.00	$0.00	$0.00	$0.00	$29.77	$39.11

(*)Special Calculation Note :

**In order to utilize a Pre-Apprentice, you must have 1 Registered Apprentice in your employ. Mason Trainees Health and Welfare after 180 days

Fifty cents ($0.50) per hour above scale shall be paid to employees working on free standing industrial or institutional chimneys which are completely detached from any building structure.

Ratio :

1-2 Journeymen to 1 Apprentice
3-4 Journeymen to 2 Apprentices
5-6 Journeymen to 2 Apprentices
7-10 Journeymen to 3 Apprentices

1 Apprentice permits 1 Mason Trainee
2 Apprenticed permits 1 Mason Trainee
3 Apprentices permits 2 Mason Trainees
4 Apprentices permits 2 Mason Trainees

For each additional 5 Journeymen to 1 Apprentice, for every 3 additional Apprentices, 1 Mason Finisher may be added

Jurisdiction (* denotes special jurisdictional note) :

Brown, Butler, Clermont, Hamilton, Preble*, Warren

Special Jurisdictional Note :

In Preble County the following townships are included: (Dixon, Gasper, Graits, Israel, Lanier and Somers)

Details :

MASON FINISHER: duties shall be to work in all aspects of Masonry construction taking direction from the employer and the Journeyman Bricklayer & Stone Mason's working on the job. Mason Finisher's may work on job site only when a registered apprentice is on job and the ratios in table above will strictly be enforced.

Refractory work is classified as working with any of the following materials: Acid brick, carbon black brick or carbon black block, firebrick grinding, plastics (with a gun) and any resinous cement.

Prevailing Wage Rate
Skilled Crafts

Name of Union: Bricklayer Local 23 Heavy Hwy (A)

Type of Rate: Commercial

Change #: LCN02-2026ib

Craft: Bricklayer

Effective Date: 6/10/2026

Effective Date: 6/10/2026

	BHR		Fringe Benefit Payments						Irrevocable Fund		Total PWR	Overtime Rate
			H&W	Pension	App Tr.	Vac.	Annuity	Other	LECET (*)	MISC (*)		
Classification												
Cement Mason Bricklayer Sewer Water Works A	$35.31		$10.71	$10.14	$0.59	$0.00	$1.80	$0.00	$0.00	$0.00	$58.55	$76.21
Apprentice	BHR	Percent										
1st year	$24.72	$70.00	$10.71	$10.14	$0.59	$0.00	$1.80	$0.00	$0.00	$0.00	$47.96	$60.32
2nd year	$28.25	$80.00	$10.71	$10.14	$0.59	$0.00	$1.80	$0.00	$0.00	$0.00	$51.49	$65.62
3rd year	$31.78	$90.00	$10.71	$10.14	$0.59	$0.00	$1.80	$0.00	$0.00	$0.00	$55.02	$70.91

(*)Special Calculation Note :

This rate is not for building construction.

This rate applies only to the Cement Masons. All other Bricklaying, PCC, Stone, Tile, Marble, Refractory, Industrial and all other applicable work performed will be performed under the applicable rates for those contracts.

Ratio :

3 Journeymen to 1 Apprentice
6 Journeymen to 2 Apprentice
9 Journeymen to 3 Apprentice
12 Journeymen to 4 Apprentice
15 Journeymen to 5 Apprentice

Jurisdiction (* denotes special jurisdictional note) :

Adams, Allen, Ashland, Ashtabula, Athens, Auglaize, Belmont, Brown, Butler, Carroll, Champaign, Clark, Clermont, Clinton, Columbiana, Coshocton, Crawford, Cuyahoga, Darke, Defiance, Delaware, Erie, Fairfield, Fayette, Franklin, Fulton, Gallia, Geauga, Greene, Guernsey, Hamilton, Hancock, Hardin, Harrison, Henry, Highland, Hocking, Holmes, Huron, Jackson, Jefferson, Knox, Lake, Lawrence, Licking, Logan, Lorain, Lucas, Madison, Mahoning, Marion, Medina, Meigs, Mercer, Miami, Monroe, Montgomery, Morgan, Morrow, Muskingum, Noble, Ottawa, Paulding, Perry, Pickaway, Pike, Portage, Preble, Putnam, Richland, Ross, Sandusky, Scioto, Seneca, Shelby, Stark, Summit, Trumbull, Tuscarawas, Union, Van Wert, Vinton, Warren, Washington, Wayne

Special Jurisdictional Note :

Details :

Bricklayer Local 23 Heavy Hwy (A): Highway Construction, Sewer, Waterworks And Utility Construction, Industrial & Building Site Heavy Construction, Airport Construction Or Railroad Construction Work.

Bricklayer Local 23 Heavy Hwy (B): Power Plant, Tunnels, Amusement Park, Athletic Stadium Site Work ,Pollution Control, Sewer Plant, Waste Plant, & Water Treatment Facilities, Construction.

Prevailing Wage Rate
Skilled Crafts

Name of Union: Bricklayer Local 23 Heavy Hwy (B)

Type of Rate: Commercial

Change #: LCN02-2026ib

Craft: Bricklayer

Effective Date: 6/10/2026

Effective Date: 6/10/2026

	BHR		Fringe Benefit Payments						Irrevocable Fund		Total PWR	Overtime Rate
			H&W	Pension	App Tr.	Vac.	Annuity	Other	LECET (*)	MISC (*)		
Classification												
Cement Mason Bricklayer Power Plants Tunnels Amusement Parks B	$36.31		$10.71	$10.14	$0.60	$0.00	$1.80	$0.00	$0.00	$0.00	$59.56	$77.72
Apprentice	BHR	Percent										
1st year	$25.42	$70.00	$10.71	$10.14	$0.60	$0.00	$1.80	$0.00	$0.00	$0.00	$48.67	$61.38
2nd year	$29.05	$80.00	$10.71	$10.14	$0.60	$0.00	$1.80	$0.00	$0.00	$0.00	$52.30	$66.83
3rd year	$32.68	$90.00	$10.71	$10.14	$0.60	$0.00	$1.80	$0.00	$0.00	$0.00	$55.93	$72.27

(*)Special Calculation Note :

This rate is not for building construction.

This rate applies only to the Cement Masons. All other Bricklaying, PCC, Stone, Tile, Marble, Refractory, Industrial and all other applicable work performed will be performed under the applicable rates for those contracts.

Ratio :

3 Journeymen to 1 Apprentice
6 Journeymen to 2 Apprentice
9 Journeymen to 3 Apprentice
12 Journeymen to 4 Apprentice
15 Journeymen to 5 Apprentice

Jurisdiction (* denotes special jurisdictional note) :

Adams, Allen, Ashland, Ashtabula, Athens, Auglaize, Belmont, Brown, Butler, Carroll, Champaign, Clark, Clermont, Clinton, Columbiana, Coshocton, Crawford, Cuyahoga, Darke, Defiance, Delaware, Erie, Fairfield, Fayette, Franklin, Fulton, Gallia, Geauga, Greene, Guernsey, Hamilton, Hancock, Hardin, Harrison, Henry, Highland, Hocking, Holmes, Huron, Jackson, Jefferson, Knox, Lake, Lawrence, Licking, Logan, Lorain, Lucas, Madison, Mahoning, Marion, Medina, Meigs, Mercer, Miami, Monroe, Montgomery, Morgan, Morrow, Muskingum, Noble, Ottawa, Paulding, Perry, Pickaway, Pike, Portage, Preble, Putnam, Richland, Ross, Sandusky, Scioto, Seneca, Shelby, Stark, Summit, Trumbull, Tuscarawas, Union, Van Wert, Vinton, Warren, Washington, Wayne

Special Jurisdictional Note :

Details :

Bricklayer Local 23 Heavy Hwy (A): Highway Construction, Sewer, Waterworks And Utility Construction, Industrial & Building Site Heavy Construction, Airport Construction Or Railroad Construction Work.

Bricklayer Local 23 Heavy Hwy (B): Power Plant, Tunnels, Amusement Park, Athletic Stadium Site Work ,Pollution Control, Sewer Plant, Waste Plant, & Water Treatment Facilities, Construction.

Prevailing Wage Rate
Skilled Crafts

Name of Union: Bricklayer Local 23 Tile Finisher

Type of Rate: Commercial

Change #: LCN01-2023ib

Craft: Bricklayer

Effective Date: 9/1/2023

Effective Date: 9/1/2023

	BHR		Fringe Benefit Payments						Irrevocable Fund		Total PWR	Overtime Rate
			H&W	Pension	App Tr.	Vac.	Annuity	Other	LECET (*)	MISC (*)		
Classification												
Bricklayer Tile Marble Terrazzo Finisher	$27.87		$9.67	$5.85	$0.54	$0.00	$0.25	$0.00	$0.00	$0.00	$44.18	$58.12
Terrazzo Base Grinder	$28.37		$9.67	$5.85	$0.54	$0.00	$0.25	$0.00	$0.00	$0.00	$44.68	$58.87
Marble Sander Polisher	$27.97		$9.67	$5.85	$0.54	$0.00	$0.25	$0.00	$0.00	$0.00	$44.28	$58.27
Apprentice	BHR	Percent										
1st 6 months 0-600 hrs	$18.12	$65.00	$9.67	$5.85	$0.54	$0.00	$0.25	$0.00	$0.00	$0.00	$34.43	$43.48
2nd 6 months 601-1200 hrs	$19.51	$70.00	$9.67	$5.85	$0.54	$0.00	$0.25	$0.00	$0.00	$0.00	$35.82	$45.57
3rd 6 months 1201-1800 hrs	$20.90	$75.00	$9.67	$5.85	$0.54	$0.00	$0.25	$0.00	$0.00	$0.00	$37.21	$47.66
4th 6 months 1801-2400 hrs	$22.30	$80.00	$9.67	$5.85	$0.54	$0.00	$0.25	$0.00	$0.00	$0.00	$38.61	$49.75
5th 6 months 2401-3000 hrs	$23.69	$85.00	$9.67	$5.85	$0.54	$0.00	$0.25	$0.00	$0.00	$0.00	$40.00	$51.84
6th 6 months 3001-3600	$26.48	$95.00	$9.67	$5.85	$0.54	$0.00	$0.25	$0.00	$0.00	$0.00	$42.79	$56.02
1-30 Days Prior to Entering Apprentice ship	$16.72	$60.00	$0.00	$0.00	$0.00	$0.00	$0.00	$0.00	$0.00	$0.00	$16.72	$25.08

(*)Special Calculation Note :

Classification title contains "Bricklayer" because contract originates within the Bricklayer Local. Note that the classification description is clarified after the local union number at the top of the page.

Ratio :

1 Journeyman to 1 Apprentice 5 Journeymen to 1 Apprentice 10 Journeymen to 2 Apprentices 15 Journeymen to 3 Apprentices 20 Journeymen to 4 Apprentices 25 Journeymen to 5 Apprentices

Jurisdiction (* denotes special jurisdictional note) :

Adams, Brown, Butler, Clermont, Gallia, Hamilton, Lawrence, Preble*, Scioto, Warren, Warren*

Special Jurisdictional Note :

Warren in the townships of Dixon, Gasper, Isrsel, Somers & Gratis in Prebble County

Details :

In order to utilize a Pre-Apprentice, you must have 1 Registerd Apprentice in your employ.

Prevailing Wage Rate
Skilled Crafts

Name of Union: Bricklayer Local 23 Tile Mechanic

Type of Rate: Commercial

Change #: LCN01-2023ib

Craft: Bricklayer

Effective Date: 9/1/2023

Effective Date: 9/1/2023

	BHR		Fringe Benefit Payments						Irrevocable Fund		Total PWR	Overtime Rate
			H&W	Pension	App Tr.	Vac.	Annuity	Other	LECET (*)	MISC (*)		
Classification												
Bricklayer Tile Terrazzo Marble Mason Mechanic	$32.41		$9.67	$5.85	$0.57	$0.00	$0.25	$0.00	$0.00	$0.00	$48.75	$64.96
Marble Layout Work	$32.91		$9.67	$5.85	$0.57	$0.00	$0.25	$0.00	$0.00	$0.00	$49.25	$65.71
Swing Scaffold Worker	$33.91		$9.67	$5.85	$0.57	$0.00	$0.25	$0.00	$0.00	$0.00	$50.25	$67.21
Apprentice	BHR	Percent										
5th/6 Months 0-600 hrs	$22.69	$70.00	$9.67	$5.85	$0.57	$0.00	$0.25	$0.00	$0.00	$0.00	$39.03	$50.37
6th/6 months 601-1200 hrs	$25.93	$80.00	$9.67	$5.85	$0.57	$0.00	$0.25	$0.00	$0.00	$0.00	$42.27	$55.23
7th/6 months 1201-1800 hrs.	$27.55	$85.00	$9.67	$5.85	$0.57	$0.00	$0.25	$0.00	$0.00	$0.00	$43.89	$57.66
8th/6 months 1801-2400 hrs.	$29.17	$90.00	$9.67	$5.85	$0.57	$0.00	$0.25	$0.00	$0.00	$0.00	$45.51	$60.09
.	$	$	$	$	$	$	$	$	$	$	$	$

(*)Special Calculation Note :

Classification title contains "Bricklayer" because contract originates within the Bricklayer Local. Note that the classification description is clarified after the local union number at the top of the page.

Ratio :

1 Journeyman to 1 Apprentice 5 Journeymen to 1 Apprentice 10 Journeymen to 2 Apprentices 15 Journeymen to 3 Apprentices 20 Journeymen to 4 Apprentices 25 Journeymen to 5 Apprentices

Jurisdiction (* denotes special jurisdictional note) :

Adams, Brown, Butler, Clermont, Gallia, Hamilton, Lawrence, Preble*, Scioto, Warren

Special Jurisdictional Note :

In Preble County the Townships of Dixon, Israel, Gasper, Lanier, Somers and Gratis.

Details :

In order to utilize a Pre-Apprentice, you must have 1 Registerd Apprentice in your employ.

Prevailing Wage Rate
Skilled Crafts

Name of Union: Carpenter & Pile Driver SW District HevHwy

Type of Rate: Commercial

Change #: LCN01-2026ib

Craft: Carpenter

Effective Date: 5/1/2026

Effective Date: 5/1/2026

	BHR		Fringe Benefit Payments						Irrevocable Fund		Total PWR	Overtime Rate
			H&W	Pension	App Tr.	Vac.	Annuity	Other	LECET (*)	MISC (*)		
Classification												
Journeyman	$37.49		$10.31	$6.95	$0.80	$0.00	$6.87	$0.15	$0.00	$0.00	$62.57	$81.31
Apprentice	BHR	Percent										
1st 6 Months	$26.24	$70.00	$10.31	$6.95	$0.80	$0.00	$6.87	$0.15	$0.00	$0.00	$51.32	$64.44
2nd 6 Months	$26.24	$70.00	$10.31	$6.95	$0.80	$0.00	$6.87	$0.15	$0.00	$0.00	$51.32	$64.44
3rd 6 Months	$29.99	$80.00	$10.31	$6.95	$0.80	$0.00	$6.87	$0.15	$0.00	$0.00	$55.07	$70.06
4th 6 Months	$29.99	$80.00	$10.31	$6.95	$0.80	$0.00	$6.87	$0.15	$0.00	$0.00	$55.07	$70.06
5th 6 Months	$33.74	$90.00	$10.31	$6.95	$0.80	$0.00	$6.87	$0.15	$0.00	$0.00	$58.82	$75.69
6th 6 Months	$33.74	$90.00	$10.31	$6.95	$0.80	$0.00	$6.87	$0.15	$0.00	$0.00	$58.82	$75.69
7th 6 Months	$35.62	$95.00	$10.31	$6.95	$0.80	$0.00	$6.87	$0.15	$0.00	$0.00	$60.70	$78.51
8th 6 Months	$35.62	$95.00	$10.31	$6.95	$0.80	$0.00	$6.87	$0.15	$0.00	$0.00	$60.70	$78.51

(*)Special Calculation Note :

Other: UBC National Fund

When the Contractor furnishes the necessary underwater gear for the Diver, the Diver shall be paid one and one half (1 & 1/2) times the journeyman rate for the time spent in the water.

Ratio :

1 Journeymen to 1 Apprentice

An employer shall have the right to employ one (1) Apprentice for one (1) Journeyman Carpenter in its employment for the first Apprentice employed, and 1 (1) Apprentice for two (2) Journeyman Carpenter for additional Apprentices employed. Thereafter, every third additional carpenter hired shall be an apprentice, if available, and if practical for the type of work being performed.

Jurisdiction (* denotes special jurisdictional note) :

Brown, Butler, Champaign, Clark, Clermont, Clinton, Darke, Greene, Hamilton, Logan, Miami, Montgomery, Preble, Shelby, Warren

Special Jurisdictional Note :

Details :

Highway Construction, Airport Construction, Heavy Construction but not limited to: (tunnels, subways, drainage projects, flood control, reservoirs).
Railroad Construction, Sewer Waterworks & Utility Construction but not limited to: (storm sewers, waterlines, gas lines).
Industrial & Building Site, Power Plant, Amusement Park, Athletic Stadium Site, Sewer and Water Plants.

Prevailing Wage Rate
Skilled Crafts

Name of Union: Carpenter & Pile Driver SW Zone 2

Type of Rate: Commercial

Change #: LCN01-2026ib

Craft: Carpenter

Effective Date: 6/10/2026

Effective Date: 6/10/2026

	BHR		Fringe Benefit Payments						Irrevocable Fund		Total PWR	Overtime Rate
			H&W	Pension	App Tr.	Vac.	Annuity	Other	LECET (*)	MISC (*)		
Classification												
Carpenter & Piledriver	$34.59		$10.03	$6.95	$0.80	$0.00	$4.28	$0.17	$0.00	$0.00	$56.82	$74.12
Apprentice	BHR	Percent										
1st 6 Months	$24.21	$70.00	$10.03	$2.00	$0.80	$0.00	$4.28	$0.17	$0.00	$0.00	$41.49	$53.59
2nd 6 Months	$24.21	$70.00	$10.03	$2.00	$0.80	$0.00	$4.28	$0.17	$0.00	$0.00	$41.49	$53.59
3rd 6 Months	$27.67	$80.00	$10.03	$5.56	$0.80	$0.00	$4.28	$0.17	$0.00	$0.00	$48.51	$62.35
4th 6 Months	$27.67	$80.00	$10.03	$5.56	$0.80	$0.00	$4.28	$0.17	$0.00	$0.00	$48.51	$62.35
5th 6 Months	$31.13	$90.00	$10.03	$6.26	$0.80	$0.00	$4.28	$0.17	$0.00	$0.00	$52.67	$68.23
6th 6 Months	$31.13	$90.00	$10.03	$6.26	$0.80	$0.00	$4.28	$0.17	$0.00	$0.00	$52.67	$68.23
7th 6 Months	$32.86	$95.00	$10.03	$6.60	$0.80	$0.00	$4.28	$0.17	$0.00	$0.00	$54.74	$71.17
8th 6 Months	$32.86	$95.00	$10.03	$6.60	$0.80	$0.00	$4.28	$0.17	$0.00	$0.00	$54.74	$71.17

(*)Special Calculation Note :

Other is for UBC National Fund

Ratio :

1 Journeyman to 1 Apprentice

Jurisdiction (* denotes special jurisdictional note) :

Brown, Butler, Clermont, Clinton, Hamilton, Warren

Special Jurisdictional Note :

Details :

Carpenter duties shall include but not limited to: Pile driving, milling, fashioning, joining, assembling, erecting, fastening, or dismantling of all material of wood, plastic, metal, fiber, cork, and composition, and all other substitute materials: pile driving, cutting, fitting, and placing of lagging, and the handling, cleaning, erecting, installing, and dismantling of machinery, equipment, and erecting pre-engineered metal buildings.

Pile Drivers work but not limited to: unloading, assembling, erection, repairs, operation, signaling, dismantling, and reloading all equipment that is used for pile driving including pile butts. pile butts is defined as sheeting or scrap piling. Underwater work that may be required in connection with the installation of piling. The diver and his tender work as a team and shall arrive at their own financial arrangements with the contractor. Any configuration of wood, steel, concrete, or composite that is jetted, driven, or vibrated onto the ground by conventional pile driving equipment for the purpose of supporting a future load that may be permanent or temporary. Driving bracing, plumbing, cutting off and capping of all piling whether wood, metal, pipe piling or composite. loading, unloading, erecting, framing, dismantling, moving, and handling of pile driving equipment. piling used in the construction and repair of all wharves, docks, piers, trestles, caissons, cofferdams, and the erection of all sea walls and breakwaters. All underwater and marine work on bulkheads, wharves, docks, shipyards, caissons, piers, bridges, pipeline work, viaducts, marine cable and trestles, as well as salvage and reclamation work where divers are employed. Rate shall include carpenters, acoustic, and ceiling installers, drywall installers, pile drivers, and floorlayers.

Prevailing Wage Rate
Skilled Crafts

Name of Union: Carpenter Locals 2 & 136 Floorlayer SW

Type of Rate: Commercial

Change #: LCN01-2026ib

Craft: Carpenter

Effective Date: 9/9/2026

Effective Date: 9/9/2026

	BHR		Fringe Benefit Payments						Irrevocable Fund		Total PWR	Overtime Rate
			H&W	Pension	App Tr.	Vac.	Annuity	Other	LECET (*)	MISC (*)		
Classification												
Carpenter Floorlayer	$32.62		$10.22	$6.95	$0.80	$0.00	$4.04	$0.18	$0.00	$0.00	$54.81	$71.12
Apprentice	BHR	Percent										
1st 6 months	$22.83	$70.00	$10.22	$2.00	$0.80	$0.00	$4.04	$0.18	$0.00	$0.00	$40.07	$51.48
2nd 6 months	$22.83	$70.00	$10.22	$2.00	$0.80	$0.00	$4.04	$0.18	$0.00	$0.00	$40.07	$51.48
3rd 6 months	$26.10	$80.00	$10.22	$5.56	$0.80	$0.00	$4.04	$0.18	$0.00	$0.00	$46.90	$59.95
4th 6 months	$26.10	$80.00	$10.22	$5.56	$0.80	$0.00	$4.04	$0.18	$0.00	$0.00	$46.90	$59.95
5th 6 months	$29.36	$90.00	$10.22	$6.26	$0.80	$0.00	$4.04	$0.18	$0.00	$0.00	$50.86	$65.54
6th 6 months	$29.36	$90.00	$10.22	$6.26	$0.80	$0.00	$4.04	$0.18	$0.00	$0.00	$50.86	$65.54
7th 6 months	$30.99	$95.00	$10.22	$6.60	$0.80	$0.00	$4.04	$0.18	$0.00	$0.00	$52.83	$68.33
8th 6 months	$30.99	$95.00	$10.22	$6.60	$0.80	$0.00	$4.04	$0.18	$0.00	$0.00	$52.83	$68.33

(*)Special Calculation Note :

Other: UBC National Fund and Install

Ratio :

1 Journeyman to 1 Apprentice

Jurisdiction (* denotes special jurisdictional note) :

Brown, Butler, Champaign, Clark, Clermont, Clinton, Darke, Greene, Hamilton, Logan, Miami, Montgomery, Preble, Shelby, Warren

Special Jurisdictional Note :

Details :

Scope of work shall include, but not be limited to: receiving,unloading,handling,distribution and installation of all carpeting materials,carpet padding or matting materials and all resilient materials whether for use on walls, floors,counter, sink,table and all preparation work necessary in connection therewith, including sanding work. the installation of nonstructural under-layment and the work of removing, cleaning waxing of any of the above. Carpeting shall include any floor covering composed of either natural or synthetic fibers that are made in breadths to be sewed, fastened or directly glued to floors or over cushioning sound-proofing materials.Resilient Floors shall consist of and include the laying of all special designs of wood,wood block, wood composition, cork, linoleum, asphalt, mastic, plastic, rubber tile,whether nailed or glued.

Prevailing Wage Rate
Skilled Crafts

Name of Union: Carpenter Millwright Local 1090 SW Zone I

Type of Rate: Commercial

Change #: LCN01-2025ib

Craft: Carpenter

Effective Date: 9/10/2025

Effective Date: 9/10/2025

	BHR		Fringe Benefit Payments						Irrevocable Fund		Total PWR	Overtime Rate
			H&W	Pension	App Tr.	Vac.	Annuity	Other	LECET (*)	MISC (*)		
Classification												
Carpenter Millwright	$37.37		$9.18	$6.95	$0.72	$0.00	$8.34	$0.19	$0.00	$0.00	$62.75	$81.43
Apprentice	BHR	Percent										
1st 6 months	$26.16	$70.00	$9.18	$4.87	$0.72	$0.00	$5.84	$0.19	$0.00	$0.00	$46.96	$60.04
2nd 6 months	$26.16	$70.00	$9.18	$4.87	$0.72	$0.00	$5.84	$0.19	$0.00	$0.00	$46.96	$60.04
3rd 6 months	$29.90	$80.00	$9.18	$5.56	$0.72	$0.00	$6.67	$0.19	$0.00	$0.00	$52.22	$67.17
4th 6 months	$29.90	$80.00	$9.18	$5.56	$0.72	$0.00	$6.67	$0.19	$0.00	$0.00	$52.22	$67.17
5th 6 months	$33.63	$90.00	$9.18	$6.26	$0.72	$0.00	$7.51	$0.19	$0.00	$0.00	$57.49	$74.31
6th 6 months	$33.63	$90.00	$9.18	$6.26	$0.72	$0.00	$7.51	$0.19	$0.00	$0.00	$57.49	$74.31
7th 6 months	$35.50	$95.00	$9.18	$6.60	$0.72	$0.00	$7.92	$0.19	$0.00	$0.00	$60.11	$77.86
8th 6 months	$35.50	$95.00	$9.18	$6.60	$0.72	$0.00	$7.92	$0.19	$0.00	$0.00	$60.11	$77.86

(*)Special Calculation Note :

Other ($0.19) $0.14 National Fund and National Millwright Fund $0.05

Ratio :

3 Journeymen to 1 Apprentice

Jurisdiction (* denotes special jurisdictional note) :

Brown, Butler, Clermont, Clinton, Hamilton, Warren

Special Jurisdictional Note :

Details :

Prevailing Wage Rate
Skilled Crafts

Name of Union: Cement Mason Local 132 (Cincinnati)

Type of Rate: Commercial

Change #: LCN01-2026ib

Craft: Cement Mason

Effective Date: 6/3/2026

Effective Date: 6/3/2026

	BHR		Fringe Benefit Payments						Irrevocable Fund		Total PWR	Overtime Rate
			H&W	Pension	App Tr.	Vac.	Annuity	Other	LECET (*)	MISC (*)		
Classification												
Cement Mason	$35.08		$8.50	$6.50	$1.00	$0.00	$0.50	$0.07	$0.00	$0.00	$51.65	$69.19
Apprentice	BHR	Percent										
1st Year	$24.56	$70.00	$8.50	$6.50	$1.00	$0.00	$0.50	$0.07	$0.00	$0.00	$41.13	$53.41
2nd Year	$28.06	$80.00	$8.50	$6.50	$1.00	$0.00	$0.50	$0.07	$0.00	$0.00	$44.63	$58.66
3rd Year	$31.57	$90.00	$8.50	$6.50	$1.00	$0.00	$0.50	$0.07	$0.00	$0.00	$48.14	$63.93

(*)Special Calculation Note :

Other: International Training Fund

*Cement Masons working on silo & slip form work shall receive $.50 per hour over Journeyman scale.
*Cement Masons working on swinging scaffolds shall receive $.50 per hour over Journeyman scale.
*Cement Masons working on high lifts from 20' and above shall receive $.50 per hour over Journeyman scale.

Ratio :

1 Journeyman to 1 Apprentice
4 Journeymen to 2 Apprentices
7 Journeymen to 3 Apprentices
10 Journeymen to 4 Apprentices

Jurisdiction (* denotes special jurisdictional note) :

Brown, Butler, Clermont, Hamilton, Highland, Warren

Special Jurisdictional Note :

Details :

Prevailing Wage Rate
Skilled Crafts

Name of Union: Cement Mason Local 132 Hev Hwy (Cincinnati)

Type of Rate: Commercial

Change #: LCN01-2026ib

Craft: Cement Mason

Effective Date: 5/1/2026

Effective Date: 5/1/2026

	BHR		Fringe Benefit Payments						Irrevocable Fund		Total PWR	Overtime Rate
			H&W	Pension	App Tr.	Vac.	Annuity	Other	LECET (*)	MISC (*)		
Classification												
Cement Mason	$39.04		$9.35	$7.65	$1.00	$0.00	$2.30	$0.07	$0.00	$0.00	$59.41	$78.93
Apprentice	BHR	Percent										
1st Year	$27.33	$70.00	$9.35	$7.65	$1.00	$0.00	$2.30	$0.07	$0.00	$0.00	$47.70	$61.36
2nd Year	$31.23	$80.00	$9.35	$7.65	$1.00	$0.00	$2.30	$0.07	$0.00	$0.00	$51.60	$67.22
3rd Year	$35.14	$90.00	$9.35	$7.65	$1.00	$0.00	$2.30	$0.07	$0.00	$0.00	$55.51	$73.08

(*)Special Calculation Note :

Other: International Training Fund

Ratio :

1 Journeyman to 1 Apprentice
2 Journeymen to 1 Apprentice thereafter

Jurisdiction (* denotes special jurisdictional note) :

Brown, Butler, Clermont, Hamilton, Highland, Warren

Special Jurisdictional Note :

Details :

Highway Construction, Sewer, Waterworks And Utility Construction, Industrial & Building Site, Heavy Construction, Airport Construction Or Railroad Construction Work, Power Plant, Tunnels, Amusement Park, Athletic Stadium Site Work, Pollution Control, Sewer Plant, Waste & Water Plant, Water Treatment Facilities Construction.

Prevailing Wage Rate
Skilled Crafts

Name of Union: Electrical Local 212 Inside

Type of Rate: Commercial

Change #: LCN01-2026ib

Craft: Electrical

Effective Date: 6/1/2026

Effective Date: 6/1/2026

	BHR		Fringe Benefit Payments						Irrevocable Fund		Total PWR	Overtime Rate
			H&W	Pension	App Tr.	Vac.	Annuity	Other	LECET (*)	MISC (*)		
Classification												
Electrician	$40.28		$8.45	$10.96	$0.73	$0.00	$3.50	$0.65	$0.00	$0.00	$64.57	$84.71
Apprentice	BHR	Percent										
1st period 0-1000 hrs	$18.13	$45.00	$8.45	$0.54	$0.33	$0.00	$0.35	$0.00	$0.00	$0.00	$27.80	$36.86
2nd period 1000-2000 hrs	$19.33	$48.00	$8.45	$0.58	$0.35	$0.00	$0.35	$0.00	$0.00	$0.00	$29.06	$38.72
3rd period 2000-3500 hrs	$20.14	$50.00	$8.45	$5.48	$0.36	$0.00	$2.05	$0.65	$0.00	$0.00	$37.13	$47.20
4th period 3500-5000 hrs	$20.95	$52.00	$8.45	$5.70	$0.38	$0.00	$2.10	$0.65	$0.00	$0.00	$38.23	$48.70
5th period 5000-6500 hrs	$22.96	$57.00	$8.45	$6.25	$0.41	$0.00	$2.20	$0.65	$0.00	$0.00	$40.92	$52.40
6th period 6500-8000 hrs	$27.39	$68.00	$8.45	$7.45	$0.49	$0.00	$2.55	$0.65	$0.00	$0.00	$46.98	$60.67

(*)Special Calculation Note :

Other: Supplemental Unemployment

Ratio :

1 - 3 Journeymen to 2 Apprentices
4 - 6 Journeymen to 4 Apprentices
7 - 9 Journeymen to 6 Apprentices

Jurisdiction (* denotes special jurisdictional note) :

Brown, Clermont, Hamilton

Special Jurisdictional Note :

Details :

Prevailing Wage Rate
Skilled Crafts

Name of Union: Electrical Local 212 Inside Lt Commercial South West

Type of Rate: Commercial

Change #: LCN01-2023ib

Craft: Electrical

Effective Date: 1/1/2024

Effective Date: 1/1/2024

	BHR		Fringe Benefit Payments						Irrevocable Fund		Total PWR	Overtime Rate
			H&W	Pension	App Tr.	Vac.	Annuity	Other	LECET (*)	MISC (*)		
Classification												
Electrician	$34.41		$7.60	$10.03	$0.62	$0.00	$2.65	$0.65	$0.00	$0.00	$55.96	$73.17
CE-3 12,001-14,000 Hrs	$27.05		$6.67	$0.81	$0.88	$0.00	$0.81	$0.00	$0.00	$0.00	$36.22	$49.75
CE-2 10,001-12,000 Hrs	$21.64		$6.67	$0.65	$0.88	$0.00	$0.65	$0.00	$0.00	$0.00	$30.49	$41.31
CE-1 8,001-10,000 Hrs	$19.83		$6.67	$0.59	$0.88	$0.00	$0.59	$0.00	$0.00	$0.00	$28.56	$38.48
CW-4 6,001-8,000 Hrs	$18.03		$6.67	$0.54	$0.88	$0.00	$0.54	$0.00	$0.00	$0.00	$26.66	$35.68
CW-3 4,001-6,000 Hrs	$16.23		$6.67	$0.49	$0.88	$0.00	$0.49	$0.00	$0.00	$0.00	$24.76	$32.88
CW-2 2,001-4,000 Hrs	$15.33		$6.67	$0.46	$0.88	$0.00	$0.46	$0.00	$0.00	$0.00	$23.80	$31.47
CW-1 0-2,000 Hrs	$14.42		$6.67	$0.43	$0.88	$0.00	$0.43	$0.00	$0.00	$0.00	$22.83	$30.04
Apprentice	BHR	Percent										
1st period 0-1000 hrs	$15.48	$45.00	$7.60	$0.46	$0.28	$0.00	$0.35	$0.00	$0.00	$0.00	$24.17	$31.92
2nd period 1000-2000 hrs	$16.52	$48.00	$7.60	$0.50	$0.30	$0.00	$0.35	$0.00	$0.00	$0.00	$25.27	$33.53
3rd period 2000-3500 hrs	$17.21	$50.02	$7.60	$5.02	$0.31	$0.00	$1.60	$0.65	$0.00	$0.00	$32.39	$41.00
4th period 3500-5000 hrs	$17.89	$52.00	$7.60	$5.22	$0.32	$0.00	$1.65	$0.65	$0.00	$0.00	$33.33	$42.28
5th period 5000-6500 hrs	$19.61	$57.00	$7.60	$5.72	$0.35	$0.00	$1.70	$0.65	$0.00	$0.00	$35.63	$45.44
6th period 6500-8000 hrs	$23.40	$68.00	$7.60	$6.82	$0.42	$0.00	$1.95	$0.65	$0.00	$0.00	$40.84	$52.54

(*)Special Calculation Note :

Other is; Supplemental Unemployment

Ratio :

Each Job site shall be allowed a ratio of two (2) Apprentices to every three (3) Journeyman Wireman. 1 to 3 Journeyman to 2 Apprentices 4 to 6 Journeyman to 4 Apprentices Etc. Construction Electrician and Construction Wireman Ratio There shall be a minimum ratio of one inside Journeyman to every (4) employees of different classification per jobsite. An inside Journeyman Wireman is required on the project as the fifth (5th) worker or when apprentices are used.

Jurisdiction (* denotes special jurisdictional note) :

Brown, Clermont, Hamilton

Special Jurisdictional Note :

The scope of work for the light commercial agreement shall apply to the following facilities not to exceed 200,000 square feet; office buildings, shopping centers, auto sales agencies and garages, churches, funeral homes, nursing homes, hotels, retail and wholesale facilities, small stand-alone manufacturing facilities when free standing and not part of a larger facility (not to exceed 50,000 square fee), solar projects (500 panels or less) unless otherwise covered under the agreement, lighting retrofits (when not associated with remodels involving branch re-circuiting) lighting retrofits shall be defined as the changing of lamps and ballasts in existing light fixtures and shall also include the one for one replacement of existing fixtures, warehouses, gas stations, food service centers, restaurants, entertainment facilities, hospitals, clinics, motels, residential buildings.

Details :

Prevailing Wage Rate
Skilled Crafts

Name of Union: Electrical Local 212 Voice Data Video

Type of Rate: Commercial

Change #: LCN01-2025ib

Craft: Electrical

Effective Date: 12/3/2025

Effective Date: 12/3/2025

	BHR		Fringe Benefit Payments						Irrevocable Fund		Total PWR	Overtime Rate
			H&W	Pension	App Tr.	Vac.	Annuity	Other	LECET (*)	MISC (*)		
Classification												
Electrical Installer Technician A	$29.00		$7.10	$6.57	$0.55	$0.00	$2.75	$0.50	$0.00	$0.00	$46.47	$60.97
Electrical Installer Technician B	$27.55		$7.10	$6.53	$0.52	$0.00	$2.75	$0.50	$0.00	$0.00	$44.95	$58.73
JW Installer Technician	$26.10		$7.10	$6.48	$0.50	$0.00	$2.75	$0.50	$0.00	$0.00	$43.43	$56.48
Cable Puller	$15.95		$4.55	$0.00	$0.30	$0.00	$0.25	$0.00	$0.00	$0.00	$21.05	$29.02
Apprentice	BHR	Percent										
1st Period 0-1000 Hours	$17.40	$60.00	$4.55	$3.94	$0.33	$0.00	$1.65	$0.30	$0.00	$0.00	$28.17	$36.87
2nd Period 1001-2000 Hours	$17.40	$60.00	$4.55	$3.94	$0.33	$0.00	$1.65	$0.30	$0.00	$0.00	$28.17	$36.87
3rd Period 2001-3000 Hours	$18.85	$65.00	$7.10	$4.28	$0.36	$0.00	$1.79	$0.33	$0.00	$0.00	$32.71	$42.13
4th Period 3001-4000 Hours	$18.85	$65.00	$7.10	$4.28	$0.36	$0.00	$1.79	$0.33	$0.00	$0.00	$32.71	$42.13
5th Period 4001-5000 Hours	$20.30	$70.00	$7.10	$4.60	$0.39	$0.00	$1.93	$0.35	$0.00	$0.00	$34.67	$44.82
6th Period 5001-6000 Hours	$21.75	$75.00	$7.10	$4.93	$0.41	$0.00	$2.06	$0.38	$0.00	$0.00	$36.63	$47.51
7th Period 6001-7000 Hours	$23.20	$80.00	$7.10	$5.26	$0.44	$0.00	$2.20	$0.40	$0.00	$0.00	$38.60	$50.20
8th Period 7001-8000 Hours	$24.65	$85.00	$7.10	$5.59	$0.47	$0.00	$2.34	$0.43	$0.00	$0.00	$40.58	$52.90

(*)Special Calculation Note :

Other is Health Reimbursment Account.

Ratio :

1 Technician to 2 Apprentices
2 Technicians to 4 Apprentices
3 Technicians to 6 Apprentices

Jurisdiction (* denotes special jurisdictional note) :

Brown, Clermont, Hamilton

Special Jurisdictional Note :

Details :

A Journeyman Installer/ Technician "A" shall be an individual with one of the following criteria:
Scenario (1)
- Successfully completed Classroom and OTJ requirements of JA TC Apprentice Program
- Maintain current BICSI Technician certification
Scenario (2) Through organizing or transfer;
- Provide 8,000 hours of documented, verifiable field experience.
- Maintain current BICSI Technician certification

A Journeyman Installer/ Technician "B" shall be an individual with one of the following criteria:
Scenario (1)
- Successfully completed Classroom and OTJ requirements of JA TC Apprentice Program
- Maintain current BICSI - ITS Level 2, Copper & Fiber certifications
SCENERIO (2) Through organizing or transfer;
- Provide 8,000 hours of documented, verifiable field experience.
- Maintain current BICSI - ITS Level 2, Copper & Fiber certifications

A Journeyman Installer /Technician shall be an individual with one of the following criteria:
SCENERIO (1)
- Successfully completed Classroom and OTJ requirements of JATC Apprentice Program
SCENERIO (2) Through organizing or transfer;
- Provide 8,000 hours of documented, verifiable field experience.

An Apprentice/Installer shall be an individual currently participating in the JA TC Administered Apprentice Program completing classroom and OTJ requirements as specified by JATC. BICSI Education courses in support of above classifications will be provided to all Apprentice/Installer students via the JATC.

The work covered by this Agreement shall include the installation, testing, service and maintenance, of all VDV systems which utilize the transmission and/or transference of voice, sound, vision or digital for commercial, education, security and entertainment purposes for the following: TV monitoring and surveillance, background-foreground music, intercom and telephone interconnect, inventory control systems, microwave transmission, multi-media, multiplex, nurse call system, radio page, school intercom and sound, and low voltage master clock systems.

The following work is excluded from the Teledata Technician work scope:
The installation of computer systems in industrial applications such as assembly lines, robotics, computer controller manufacturing systems.
The installation of conduit and/or raceways shall be installed by Inside Wireman. On sites where there is no Inside Wireman employed, the Teledata Technician may install raceway or conduit not greater than 10 ft.
Fire Alarm work is excluded on all new construction sites or wherever the fire alarm system is installed in conduit.
All HVAC control work.

Prevailing Wage Rate
Skilled Crafts

Name of Union: Electrical Local 71 High Tension Pipe Type Cable

Type of Rate: Commercial

Change #: LCN01-2026ib

Craft: Electrical

Effective Date: 1/7/2026

Effective Date: 1/7/2026

	BHR		Fringe Benefit Payments						Irrevocable Fund		Total PWR	Overtime Rate
			H&W	Pension	App Tr.	Vac.	Annuity	Other	LECET (*)	MISC (*)		
Classification												
Electrical Lineman	$54.94		$7.50	$1.65	$0.55	$0.00	$13.19	$1.00	$0.00	$0.00	$78.83	$106.30
Certified Lineman Welder	$54.94		$7.50	$1.65	$0.55	$0.00	$13.19	$1.00	$0.00	$0.00	$78.83	$106.30
Certified Cable Splicer	$54.94		$7.50	$1.65	$0.55	$0.00	$13.19	$1.00	$0.00	$0.00	$78.83	$106.30
Operator A	$49.20		$7.50	$1.48	$0.49	$0.00	$11.81	$1.00	$0.00	$0.00	$71.48	$96.08
Operator B	$43.52		$7.50	$1.31	$0.44	$0.00	$10.44	$1.00	$0.00	$0.00	$64.21	$85.97
Operator C	$34.93		$7.50	$1.05	$0.35	$0.00	$8.38	$1.00	$0.00	$0.00	$53.21	$70.67
Groundman 0-12 months Exp	$27.47		$7.50	$0.82	$0.27	$0.00	$6.59	$1.00	$0.00	$0.00	$43.65	$57.38
Groundman 0-12 months Exp w/CDL	$30.22		$7.50	$0.91	$0.30	$0.00	$7.25	$1.00	$0.00	$0.00	$47.18	$62.29
Groundman 1 yr or more	$30.22		$7.50	$0.91	$0.30	$0.00	$7.25	$1.00	$0.00	$0.00	$47.18	$62.29
Groundman 1 yr or more w/CDL	$35.71		$7.50	$1.07	$0.36	$0.00	$8.57	$1.00	$0.00	$0.00	$54.21	$72.06
Equipment Mechanic A	$43.52		$7.50	$1.31	$0.44	$0.00	$10.44	$1.00	$0.00	$0.00	$64.21	$85.97
Equipment Mechanic B	$39.22		$7.50	$1.18	$0.39	$0.00	$9.41	$1.00	$0.00	$0.00	$58.70	$78.31
Equipment Mechanic C	$34.92		$7.50	$1.05	$0.35	$0.00	$8.38	$1.00	$0.00	$0.00	$53.20	$70.66
X-Ray Technician	$54.94		$7.50	$1.65	$0.55	$0.00	$13.19	$1.00	$0.00	$0.00	$78.83	$106.30
Apprentice	BHR	Percent										
1st 1000 hrs	$32.96	$60.00	$7.50	$0.99	$0.33	$0.00	$7.91	$1.00	$0.00	$0.00	$50.69	$67.17
2nd 1000 hrs	$35.71	$65.00	$7.50	$1.07	$0.36	$0.00	$8.57	$1.00	$0.00	$0.00	$54.21	$72.06
3rd 1000 hrs	$38.46	$70.00	$7.50	$1.15	$0.38	$0.00	$9.23	$1.00	$0.00	$0.00	$57.72	$76.95

4th 1000 hrs	$41.20	$75.00	$7.50	$1.24	$0.41	$0.00	$9.89	$1.00	$0.00	$0.00	$61.24	$81.84
5th 1000 hrs	$43.95	$80.00	$7.50	$1.32	$0.44	$0.00	$10.55	$1.00	$0.00	$0.00	$64.76	$86.74
6th 1000 hrs	$46.70	$85.00	$7.50	$1.39	$0.47	$0.00	$11.21	$1.00	$0.00	$0.00	$68.27	$91.62
7th 1000 hrs	$49.45	$90.00	$7.50	$1.48	$0.49	$0.00	$11.87	$1.00	$0.00	$0.00	$71.79	$96.52

(*)Special Calculation Note :

Other is Health Reimbursement Account

Ratio :

1 Journeyman to 1 Apprentice

Jurisdiction (* denotes special jurisdictional note) :

Adams, Ashland, Ashtabula, Athens, Auglaize, Belmont, Brown, Butler, Carroll, Champaign, Clark, Clermont, Clinton, Columbiana, Coshocton, Crawford, Cuyahoga, Darke, Delaware, Fairfield, Fayette, Franklin, Gallia, Geauga, Greene, Guernsey, Hamilton, Harrison, Highland, Hocking, Holmes, Jackson, Jefferson, Knox, Lake, Lawrence, Licking, Logan, Lorain, Madison, Mahoning, Marion, Medina, Meigs, Mercer, Miami, Monroe, Montgomery, Morgan, Morrow, Muskingum, Noble, Perry, Pickaway, Pike, Portage, Preble, Richland, Ross, Scioto, Shelby, Stark, Summit, Trumbull, Tuscarawas, Union, Vinton, Warren, Washington, Wayne

Special Jurisdictional Note :

Details :

Operator "A": John Henry Rock Drill, D-6 (or equivalent) and above, Trackhoe Digger, (320 Track excavator), Cranes (greater then 25 tons and less than 45 tons).
Operator "B": Cranes (greater than 6 tons and up to 25 tons), Backhoes, Road Tractor, Dozer up to D-5, Pressure Digger- wheeled or tracked, all Tension wire Stringing equipment.
Operator "C": Trench, Backhoe, Riding type vibratory Compactor, Ground Rod Driver, Boom Truck (6 ton & below), Skid Steer Loaders, Material Handler.

Special Notes:

When Cable Splicer helpers are used, they must be a Journeyman Lineman.

Pipe installation, holiday testing, welding, cable splicing operation of vacuum pumps and cable pulling equipment and all work requiring the use of hand tools shall be done by Journeymen and Apprentices. Pipe coating, manhole preparations and conditioning, nitrogen connections and flowmeter installation shall be done by or under the direct supervision of a Journeyman.

At least two (2) Journeyman Linemen in addition to certified lineman welders shall be employed to install high voltage pipe.

When pulling cable, at least six (6) of the workmen shall be no less than Journeyman classifications. When pumping oil, only Journeyman Lineman or equipment operators shall be permitted to operate degasifying and oil pumping equipment

Prevailing Wage Rate
Skilled Crafts

Name of Union: Electrical Local 71 Outside Cincinnati

Type of Rate: Commercial

Change #: LCN01-2025ib

Craft: Electrical

Effective Date: 6/4/2025

Effective Date: 6/4/2025

	BHR		Fringe Benefit Payments						Irrevocable Fund		Total PWR	Overtime Rate
			H&W	Pension	App Tr.	Vac.	Annuity	Other	LECET (*)	MISC (*)		
Classification												
Electrical Lineman	$46.03		$7.50	$1.38	$0.46	$0.00	$9.20	$0.50	$0.00	$0.00	$65.07	$88.09
Traffic Signal & Lighting Journeyman	$44.43		$7.50	$1.33	$0.44	$0.00	$8.89	$0.50	$0.00	$0.00	$63.09	$85.31
Equipment Operator	$40.44		$7.50	$1.21	$0.40	$0.00	$8.09	$0.50	$0.00	$0.00	$58.14	$78.36
Groundman 0-12 months (W/O CDL)	$24.52		$7.50	$0.74	$0.25	$0.00	$4.90	$0.50	$0.00	$0.00	$38.41	$50.67
Groundman 0-21 Months (W/CDL)	$26.78		$7.50	$0.80	$0.27	$0.00	$5.36	$0.50	$0.00	$0.00	$41.21	$54.60
Groundman 1 Year or More (W/CDL)	$29.07		$7.50	$0.87	$0.29	$0.00	$5.81	$0.50	$0.00	$0.00	$44.04	$58.58
Traffic Signal Apprentices	$		$	$	$	$	$	$	$	$	$	$
1st 1,000 hours	$26.66		$7.50	$0.80	$0.27	$0.00	$5.33	$0.50	$0.00	$0.00	$41.06	$54.39
2nd 1,000 hours	$28.88		$7.50	$0.87	$0.29	$0.00	$5.78	$0.50	$0.00	$0.00	$43.82	$58.26
3rd 1,000 hours	$31.10		$7.50	$0.93	$0.31	$0.00	$6.22	$0.50	$0.00	$0.00	$46.56	$62.11
4th 1,000 hours	$33.32		$7.50	$1.00	$0.33	$0.00	$6.66	$0.50	$0.00	$0.00	$49.31	$65.97
5th 1,000 hours	$35.54		$7.50	$1.07	$0.36	$0.00	$7.11	$0.50	$0.00	$0.00	$52.08	$69.85
6th 1,000 hours	$39.99		$7.50	$1.20	$0.40	$0.00	$8.00	$0.50	$0.00	$0.00	$57.59	$77.59
Apprentice	BHR	Percent										
1st 1,000 Hours	$27.62	$60.00	$7.50	$0.83	$0.28	$0.00	$5.52	$0.50	$0.00	$0.00	$42.25	$56.06
2nd 1,000 Hours	$29.92	$65.00	$7.50	$0.90	$0.30	$0.00	$5.98	$0.50	$0.00	$0.00	$45.10	$60.06
3rd 1,000 Hours	$32.22	$70.00	$7.50	$0.97	$0.32	$0.00	$6.44	$0.50	$0.00	$0.00	$47.95	$64.06
4th 1,000 Hours	$34.52	$75.00	$7.50	$1.04	$0.35	$0.00	$6.90	$0.50	$0.00	$0.00	$50.81	$68.07

5th 1,000 Hours	$36.82	$80.00	$7.50	$1.10	$0.37	$0.00	$7.36	$0.50	$0.00	$0.00	$53.65	$72.07
6th 1,000 Hours	$39.13	$85.00	$7.50	$1.17	$0.39	$0.00	$7.82	$0.50	$0.00	$0.00	$56.51	$76.07
7th 1,000 Hours	$41.43	$90.00	$7.50	$1.24	$0.41	$0.00	$8.28	$0.50	$0.00	$0.00	$59.36	$80.07

(*)Special Calculation Note :

Other is Health Reimburstment Account

Ratio :

1 Journeymen to 1 Apprentice

Jurisdiction (* denotes special jurisdictional note) :

Brown, Butler, Clermont, Hamilton, Warren

Special Jurisdictional Note :

Details :

A groundman when directed shall assist a Journeyman in the performance of his/her work on the ground, including the use of hand tools. A Groundman under no circumstances shall climb poles, towers,ladders, or work from an elevated platform or bucket truck. No more than three (3) Groundmen shall work alone. Jobs with more that three Groundmen shall be supervised by a Groundcrew Foreman, Journeyman Lineman, Journeyman Traffic Signal Technician or an Equipment Operator. Scope of Work: installation and maintenance of highway and street lighting, highway and street sign lighting, electronic message boards and traffic control systems, camera systems, traffic signal work, substation and line construction including overhead and underground projects for private and industrial work as in accordance with the IBEW Constitution. This Agreement includes the operation of all tools and equipment necessary for the installation of the above projects.

Prevailing Wage Rate
Skilled Crafts

Name of Union: Electrical Local 71 Outside Utility Power

Type of Rate: Commercial

Change #: LCN01-2026ib

Craft: Electrical

Effective Date: 1/7/2026

Effective Date: 1/7/2026

	BHR		Fringe Benefit Payments						Irrevocable Fund		Total PWR	Overtime Rate
			H&W	Pension	App Tr.	Vac.	Annuity	Other	LECET (*)	MISC (*)		
Classification												
Electrical Lineman	$52.03		$7.50	$1.56	$0.52	$0.00	$12.49	$1.00	$0.00	$0.00	$75.10	$101.12
Substation Technician	$52.03		$7.50	$1.56	$0.50	$0.00	$12.49	$1.00	$0.00	$0.00	$75.08	$101.09
Cable Splicer	$54.50		$7.50	$1.64	$0.55	$0.00	$13.08	$1.00	$0.00	$0.00	$78.27	$105.52
Operator A	$46.61		$7.50	$1.40	$0.47	$0.00	$11.19	$1.00	$0.00	$0.00	$68.17	$91.47
Operator B	$41.17		$7.50	$1.23	$0.41	$0.00	$9.87	$1.00	$0.00	$0.00	$61.18	$81.77
Operator C	$33.00		$7.50	$0.99	$0.33	$0.00	$7.92	$1.00	$0.00	$0.00	$50.74	$67.24
Groundman 0-12 months Exp	$26.02		$7.50	$0.78	$0.26	$0.00	$6.24	$1.00	$0.00	$0.00	$41.80	$54.81
Groundman 0-12 months Exp w/CDL	$28.62		$7.50	$0.86	$0.29	$0.00	$6.87	$1.00	$0.00	$0.00	$45.14	$59.45
Groundman 1 yr or more	$28.62		$7.50	$0.86	$0.29	$0.00	$6.87	$1.00	$0.00	$0.00	$45.14	$59.45
Groundman 1 yr or more w/CDL	$33.82		$7.50	$1.01	$0.34	$0.00	$8.12	$1.00	$0.00	$0.00	$51.79	$68.70
Equipment Mechanic A	$41.17		$7.50	$1.23	$0.41	$0.00	$9.87	$1.00	$0.00	$0.00	$61.18	$81.77
Equipment Mechanic B	$37.09		$7.50	$1.11	$0.37	$0.00	$8.90	$1.00	$0.00	$0.00	$55.97	$74.52
Equipment Mechanic C	$33.00		$7.50	$0.99	$0.33	$0.00	$7.92	$1.00	$0.00	$0.00	$50.74	$67.24
Line Truck w/auger	$36.40		$7.50	$1.09	$0.36	$0.00	$8.71	$1.00	$0.00	$0.00	$55.06	$73.26
Apprentice	BHR	Percent										
1st 1000 hrs	$31.22	$60.00	$7.50	$0.94	$0.31	$0.00	$7.49	$1.00	$0.00	$0.00	$48.46	$64.07
2nd 1000 hrs	$33.82	$65.00	$7.50	$1.01	$0.34	$0.00	$8.12	$1.00	$0.00	$0.00	$51.79	$68.70
3rd 1000 hrs	$36.42	$70.00	$7.50	$1.09	$0.36	$0.00	$8.74	$1.00	$0.00	$0.00	$55.11	$73.32

4th 1000 hrs	$39.02	$75.00	$7.50	$1.17	$0.39	$0.00	$9.37	$1.00	$0.00	$0.00	$58.45	$77.96
5th 1000 hrs	$41.62	$80.00	$7.50	$1.25	$0.44	$0.00	$9.99	$1.00	$0.00	$0.00	$61.80	$82.61
6th 1000 hrs	$44.23	$85.00	$7.50	$1.33	$0.44	$0.00	$10.61	$1.00	$0.00	$0.00	$65.11	$87.22
7th 1000 hrs	$46.83	$90.00	$7.50	$1.40	$0.47	$0.00	$11.24	$1.00	$0.00	$0.00	$68.44	$91.86

(*)Special Calculation Note :

Other: Health Reimbursement Account

Ratio :

(1) Journeyman Lineman to (1) Apprentice

Jurisdiction (* denotes special jurisdictional note) :

Adams, Ashland, Ashtabula, Athens, Auglaize, Belmont, Brown, Butler, Carroll, Champaign, Clark, Clermont, Clinton, Columbiana, Coshocton, Crawford, Cuyahoga, Darke, Delaware, Fairfield, Fayette, Franklin, Gallia, Geauga, Greene, Guernsey, Hamilton, Harrison, Highland, Hocking, Holmes, Jackson, Jefferson, Knox, Lake, Lawrence, Licking, Logan, Lorain, Madison, Mahoning, Marion, Medina, Meigs, Mercer, Miami, Monroe, Montgomery, Morgan, Morrow, Muskingum, Noble, Perry, Pickaway, Pike, Portage, Preble, Richland, Ross, Scioto, Shelby, Stark, Summit, Trumbull, Tuscarawas, Union, Vinton, Warren, Washington, Wayne

Special Jurisdictional Note :

Details :

Operator "A": John Henry Rock Drill, D-6 (or equivalent) and above, Trackhoe Digger, (320 Track excavator), Cranes (greater then 25 tons and less than 45 tons).
Operator "B": Cranes (greater than 6 tons and up to 25 tons), Backhoes, Road Tractor, Dozer up to D-5, Pressure Digger- wheeled or tracked, all Tension wire Stringing equipment.
Operator "C": Trench, Backhoe, Riding type vibratory Compactor, Ground Rod Driver, Boom Truck (6 ton & below), Skid Steer Loaders, Material Handler.

Prevailing Wage Rate
Skilled Crafts

Name of Union: Electrical Local 71 Underground Residential Distribution

Type of Rate: Commercial

Change #: LCN01-2026ib

Craft: Electrical

Effective Date: 1/7/2026

Effective Date: 1/7/2026

	BHR		Fringe Benefit Payments						Irrevocable Fund		Total PWR	Overtime Rate
			H&W	Pension	App Tr.	Vac.	Annuity	Other	LECET (*)	MISC (*)		
Classification												
URD Electrican	$39.42		$7.50	$1.18	$0.39	$0.00	$9.43	$1.00	$0.00	$0.00	$58.92	$78.63
Equipment Operator A	$35.24		$7.50	$1.06	$0.35	$0.00	$8.46	$1.00	$0.00	$0.00	$53.61	$71.23
Equipment Operator B	$32.34		$7.50	$0.97	$0.32	$0.00	$7.76	$1.00	$0.00	$0.00	$49.89	$66.06
Directional Drill Locator	$35.24		$7.50	$1.06	$0.35	$0.00	$8.46	$1.00	$0.00	$0.00	$53.61	$71.23
Directional Drill Operator	$32.34		$7.50	$0.97	$0.32	$0.00	$7.76	$1.00	$0.00	$0.00	$49.89	$66.06
Groundman 0-12 months Exp	$25.50		$7.50	$0.77	$0.26	$0.00	$6.12	$1.00	$0.00	$0.00	$41.15	$53.90
Groundman 0-12 months Exp w/CDL	$28.15		$7.50	$0.84	$0.28	$0.00	$6.76	$1.00	$0.00	$0.00	$44.53	$58.60
Groundman 1 yr or more	$28.15		$7.50	$0.84	$0.28	$0.00	$6.76	$1.00	$0.00	$0.00	$44.53	$58.60
Groundman 1 yr or more w/CDL	$33.47		$7.50	$1.00	$0.33	$0.00	$8.03	$1.00	$0.00	$0.00	$51.33	$68.06
Apprentice	BHR	Percent										
1st 1000 hrs	$31.54	$80.00	$7.50	$0.95	$0.32	$0.00	$7.57	$1.00	$0.00	$0.00	$48.88	$64.65
2nd 1000 hrs	$33.51	$85.00	$7.50	$1.01	$0.34	$0.00	$8.04	$1.00	$0.00	$0.00	$51.40	$68.16
3rd 1000 hrs	$35.48	$90.00	$7.50	$1.06	$0.35	$0.00	$8.51	$1.00	$0.00	$0.00	$53.90	$71.64
4th 1000 hrs	$37.45	$95.00	$7.50	$1.12	$0.37	$0.00	$8.99	$1.00	$0.00	$0.00	$56.43	$75.16

(*)Special Calculation Note :

Other: Health Reimburstment Account

Ratio :

(1) Journeyman Lineman to (1) Apprentice

Jurisdiction (* denotes special jurisdictional note) :

Adams, Ashland, Ashtabula, Athens, Auglaize, Belmont, Brown, Butler, Carroll, Champaign, Clark, Clermont, Clinton, Columbiana, Coshocton, Crawford, Cuyahoga, Darke, Delaware, Fairfield, Fayette, Franklin, Gallia, Geauga, Greene, Guernsey, Hamilton, Harrison, Highland, Hocking, Holmes, Jackson, Jefferson, Knox, Lake, Lawrence, Licking, Logan, Lorain, Madison, Mahoning, Marion, Medina, Meigs, Mercer, Miami, Monroe, Montgomery, Morgan, Morrow, Muskingum, Noble, Perry, Pickaway, Pike, Portage, Preble, Richland, Ross, Scioto, Shelby, Stark, Summit, Trumbull, Tuscarawas, Union, Vinton, Warren, Washington, Wayne

Special Jurisdictional Note :

Details :

This work applies to projects designated for any outside Underground Residential Distribution construction work for electrical utilities, municipalities and rural electrification projects.

Prevailing Wage Rate
Skilled Crafts

Name of Union: Electrical Local 71 Voice Data Video Outside

Type of Rate: Commercial

Change #: LCN02-2024ib

Craft: Electrical

Effective Date: 3/6/2024

Effective Date: 3/6/2024

	BHR		Fringe Benefit Payments						Irrevocable Fund		Total PWR	Overtime Rate
			H&W	Pension	App Tr.	Vac.	Annuity	Other	LECET (*)	MISC (*)		
Classification												
Electrical Installer Technician I	$35.39		$7.25	$1.06	$0.00	$0.00	$1.77	$0.00	$0.00	$0.00	$45.47	$63.17
Installer Technician II	$33.37		$7.25	$1.00	$0.00	$0.00	$1.67	$0.00	$0.00	$0.00	$43.29	$59.98
Installer Repairman	$33.37		$7.25	$1.00	$0.00	$0.00	$1.67	$0.00	$0.00	$0.00	$43.29	$59.98
Equipment Operator II	$24.98		$7.25	$0.75	$0.00	$0.00	$1.25	$0.00	$0.00	$0.00	$34.23	$46.72
Cable Splicer	$35.39		$7.25	$1.06	$0.00	$0.00	$1.77	$0.00	$0.00	$0.00	$45.47	$63.17
Ground Driver W/CDL	$16.69		$7.25	$0.50	$0.00	$0.00	$0.83	$0.00	$0.00	$0.00	$25.27	$33.62
Groundman	$14.57		$7.25	$0.44	$0.00	$0.00	$0.73	$0.00	$0.00	$0.00	$22.99	$30.28
Apprentice	BHR	Percent										
Trainee F	$17.70	$50.01	$7.25	$0.53	$0.00	$0.89	$0.00	$0.00	$0.00	$0.00	$26.37	$35.22
Trainee E	$20.53	$58.00	$7.25	$0.62	$0.00	$1.03	$0.00	$0.00	$0.00	$0.00	$29.43	$39.69
Trainee D	$23.36	$66.00	$7.25	$0.70	$0.00	$1.17	$0.00	$0.00	$0.00	$0.00	$32.48	$44.16
Trainee C	$26.19	$74.00	$7.25	$0.79	$0.00	$1.31	$0.00	$0.00	$0.00	$0.00	$35.54	$48.63
Trainee B	$29.02	$82.00	$7.25	$0.87	$0.00	$1.45	$0.00	$0.00	$0.00	$0.00	$38.59	$53.10
Trainee A	$31.85	$90.00	$7.25	$0.96	$0.00	$1.59	$0.00	$0.00	$0.00	$0.00	$41.65	$57.58

(*)Special Calculation Note :

Ratio :

1Trainee to 1 Journeyman

Jurisdiction (* denotes special jurisdictional note) :

Adams, Ashland, Ashtabula, Athens, Auglaize, Belmont, Brown, Butler, Carroll, Champaign, Clark, Clermont, Clinton, Columbiana, Coshocton, Crawford, Cuyahoga, Darke, Delaware, Fairfield, Fayette, Franklin, Gallia, Geauga, Greene, Guernsey, Hamilton, Harrison, Highland, Hocking, Holmes, Jackson, Jefferson, Knox, Lake, Lawrence, Licking, Logan, Lorain, Madison, Mahoning, Marion, Medina, Meigs, Mercer, Miami, Monroe, Montgomery, Morgan, Morrow, Muskingum, Noble, Perry, Pickaway, Pike, Portage, Preble, Richland, Ross, Scioto, Shelby, Stark, Summit, Trumbull, Tuscarawas, Union, Vinton, Warren, Washington, Wayne

Special Jurisdictional Note :

Details :

Cable Splicer: Inspect and test lines or cables, analyze results, and evaluate transmission characteristics. Cover conductors with insulation or seal splices with moisture-proof covering. Install, splice, test, and repair cables using tools or mechanical equipment. This will include the splicing of fiber. Installer Technician I: Must know all aspects of telephone and cable work. This is to include aerial, underground, and manhole work. Must know how to climb and run bucket. Must have all the tools required to perform these tasks. Must be able to be responsible for the safety of the crew at all times. Must also have CDL license and have at least 5 years experience. Installer Repairman: Perform tasks of repairing, installing, and testing phone and CATV services. Installer Technician II: Have at least three years of telephone and CATV experience. Must have the knowledge of underground, aerial, and manhole work. Must be able to climb and operate bucket. Must have CDL. Must have all tools needed to perform these tasks. Equipment Operator II: Able to operate a digger derrick or bucket truck. Have at least 3 years of experience and must have a valid CDL license. Groundman W/CDL: Must have a valid CDL license and be able to perform tasks such as: climbing poles, pulling down guys, making up material, and getting appropriate tools for the job. Must have at least 5 year's experience. Groundman: Perform tasks such as: climbing poles, pulling down guys, making up material, and getting appropriate tools for the job. Experience 0-5 years.

Prevailing Wage Rate
Skilled Crafts

Name of Union: Elevator Local 11

Type of Rate: Commercial

Change #: LCN01-2026ib

Craft: Elevator

Effective Date: 3/18/2026

Effective Date: 3/18/2026

	BHR		Fringe Benefit Payments						Irrevocable Fund		Total PWR	Overtime Rate
			H&W	Pension	App Tr.	Vac.	Annuity	Other	LECET (*)	MISC (*)		
Classification												
Elevator Mechanic	$59.92		$16.37	$11.06	$0.85	$4.79	$10.70	$2.26	$0.00	$0.00	$105.95	$135.91
Apprentice	BHR	Percent										
Probationary Apprentice	$29.96	$50.00	$0.00	$0.00	$0.00	$1.80	$0.00	$0.00	$0.00	$0.00	$31.76	$46.74
1st year	$32.96	$55.00	$16.37	$11.06	$0.85	$1.98	$10.70	$1.24	$0.00	$0.00	$75.16	$91.64
2nd year	$38.95	$65.00	$16.37	$11.06	$0.85	$2.34	$10.70	$1.47	$0.00	$0.00	$81.74	$101.22
3rd year	$41.94	$70.00	$16.37	$11.06	$0.85	$2.52	$10.70	$1.58	$0.00	$0.00	$85.02	$105.99
4th year	$47.94	$80.00	$16.37	$11.06	$0.85	$2.88	$10.70	$1.80	$0.00	$0.00	$91.60	$115.57
Helper	$41.94	$70.00	$16.37	$11.06	$0.85	$3.36	$10.70	$1.58	$0.00	$0.00	$85.86	$106.83
Assistant Mechanic	$47.94	$80.00	$16.37	$11.06	$0.85	$3.82	$10.70	$1.80	$0.00	$0.00	$92.54	$116.51

(*)Special Calculation Note :

Other: Holiday Pay

Ratio :

1 Journeyman to 1 Apprentice
1 Journeyman to 1 Helper
1 Journeyman to 1 Assistant Mechanic

Jurisdiction (* denotes special jurisdictional note) :

Adams, Brown, Butler, Clermont, Clinton, Darke, Greene, Hamilton, Highland, Miami, Montgomery, Preble, Scioto, Shelby, Warren

Special Jurisdictional Note :

Details :

Prevailing Wage Rate
Skilled Crafts

Name of Union: Glazier Local 387

Type of Rate: Commercial

Change #: LCN01-2025ib

Craft: Glazier

Effective Date: 11/19/2025

Effective Date: 11/19/2025

	BHR		Fringe Benefit Payments						Irrevocable Fund		Total PWR	Overtime Rate
			H&W	Pension	App Tr.	Vac.	Annuity	Other	LECET (*)	MISC (*)		
Classification												
Glazier	$35.85		$6.80	$12.30	$0.45	$0.00	$0.00	$0.00	$0.00	$0.00	$55.40	$73.33
Apprentice	BHR	Percent										
1st Year	$23.30	$65.00	$6.80	$8.85	$0.45	$0.00	$0.00	$0.00	$0.00	$0.00	$39.40	$51.05
2nd Year	$26.89	$75.00	$6.80	$9.84	$0.45	$0.00	$0.00	$0.00	$0.00	$0.00	$43.98	$57.42
3rd Year	$30.47	$85.00	$6.80	$10.82	$0.45	$0.00	$0.00	$0.00	$0.00	$0.00	$48.54	$63.77
4th Year	$34.06	$95.00	$6.80	$11.81	$0.45	$0.00	$0.00	$0.00	$0.00	$0.00	$53.12	$70.15

(*)Special Calculation Note :

No special calculations for this skilled craft wage rate are required at this time.

Ratio :

1 Journeyman to 1 Apprentice

Jurisdiction (* denotes special jurisdictional note) :

Adams, Brown, Butler, Champaign, Clark, Clermont, Clinton, Darke, Fayette*, Greene, Hamilton, Highland, Miami, Montgomery, Preble, Warren

Special Jurisdictional Note :

Fayette County: Eastern portion of route #41 being the dividing line between locals 372 and 387. Local 387 has jurisdiction of projects built on property which borders route #41 East.

Details :

Prevailing Wage Rate
Skilled Crafts

Name of Union: Ironworker Local 44

Type of Rate: Commercial

Change #: LCN01-2026ib

Craft: Ironworker

Effective Date: 6/1/2026

Effective Date: 6/1/2026

	BHR		Fringe Benefit Payments						Irrevocable Fund		Total PWR	Overtime Rate
			H&W	Pension	App Tr.	Vac.	Annuity	Other	LECET (*)	MISC (*)		
Classification												
Ironworker Reinforcing	$40.47		$9.80	$9.50	$0.60	$0.00	$4.30	$0.00	$0.00	$0.00	$64.67	$84.91
Structural	$39.97		$9.80	$9.50	$0.60	$0.00	$4.30	$0.00	$0.00	$0.00	$64.17	$84.16
Ornamental	$39.97		$9.80	$9.50	$0.60	$0.00	$4.30	$0.00	$0.00	$0.00	$64.17	$84.16
Machine Mover/Rigger	$39.97		$9.80	$9.50	$0.60	$0.00	$4.30	$0.00	$0.00	$0.00	$64.17	$84.16
Conveyer Mechanic	$39.97		$9.80	$9.50	$0.60	$0.00	$4.30	$0.00	$0.00	$0.00	$64.17	$84.16
Maintenance/Heavy Hwy	$39.97		$9.80	$9.50	$0.60	$0.00	$4.30	$0.00	$0.00	$0.00	$64.17	$84.16
Welder A	$40.22		$9.80	$9.50	$0.60	$0.00	$4.30	$0.00	$0.00	$0.00	$64.42	$84.53
Welder B	$40.47		$9.80	$9.50	$0.60	$0.00	$4.30	$0.00	$0.00	$0.00	$64.67	$84.91
Sheeter	$39.97		$9.80	$9.50	$0.60	$0.00	$4.30	$0.00	$0.00	$0.00	$64.17	$84.16
Fence Erector	$39.97		$9.80	$9.50	$0.60	$0.00	$4.30	$0.00	$0.00	$0.00	$64.17	$84.16
Ironworker	$39.97		$9.80	$9.50	$0.60	$0.00	$4.30	$0.00	$0.00	$0.00	$64.17	$84.16
Apprentice	BHR	Percent										
1st yr A	$24.28	$60.00	$9.80	$9.50	$0.60	$0.00	$1.08	$0.00	$0.00	$0.00	$45.26	$57.40
1st yr B	$26.31	$65.00	$9.80	$9.50	$0.60	$0.00	$1.08	$0.00	$0.00	$0.00	$47.29	$60.45
2nd yr A	$28.33	$70.00	$9.80	$9.50	$0.60	$0.00	$1.08	$0.00	$0.00	$0.00	$49.31	$63.48
2nd yr B	$30.35	$75.00	$9.80	$9.50	$0.60	$0.00	$1.08	$0.00	$0.00	$0.00	$51.33	$66.51
3rd yr A	$32.38	$80.00	$9.80	$9.50	$0.60	$0.00	$2.15	$0.00	$0.00	$0.00	$54.43	$70.62
3rd yr B	$34.40	$85.00	$9.80	$9.50	$0.60	$0.00	$2.15	$0.00	$0.00	$0.00	$56.45	$73.65
4th yr A	$36.42	$90.00	$9.80	$9.50	$0.60	$0.00	$3.23	$0.00	$0.00	$0.00	$59.55	$77.76
4th yr B	$38.45	$95.00	$9.80	$9.50	$0.60	$0.00	$3.23	$0.00	$0.00	$0.00	$61.58	$80.81
4th yr C	$40.47	$100.00	$9.80	$9.50	$0.60	$0.00	$3.23	$0.00	$0.00	$0.00	$63.60	$83.84

(*)Special Calculation Note :

Ratio :

1 Journeyman to 1 Apprentice

Jurisdiction (* denotes special jurisdictional note) :

Adams*, Brown, Butler*, Clermont, Clinton*, Hamilton, Highland*, Warren*

Special Jurisdictional Note :

Adams County Twps included: Bratton, Scott, Winchester, Wayne.
Butler County Twps included: Oxford, St. Clair, Fairfield, Morgan, Liberty, Union, Ross, Reily, Hanover, West Chester.

Clinton County Twps included: Manchester and South West Borrow.
Highland County Twps included: Dotson, Salem, Clay, White Oak, Hamer, New Market, Concord, Jackson, Washington.
Warren County Twps included: Harlan, Deerfield, Hamilton.

Details :

Structural Iron Work but not limited to: field fabrication, all loading to and including the erecting, rigging, assembly, dismantling, placing, temporary and permanent securing by any means of all structural iron, steel, ornamental, lead, bronze, brass, copper, aluminum, glass all ferrous and nonferrous metal and composite material, mass timber, precast, prestressed and post-stressed concret structures, reinforcing steel, and post tensioning. Bridges and bridge rails, bridge viaducts, bucks bulkheads, bumper and bumper post, canopies and unistrut canopies, corrugated ferrous and nonferrous sheets when attached to steel frames, columns, beams, bar-joists, trusses, grinders, roof decking, electrical supports, elevator cars, elevator fronts and enclosures, erection of steel towers, flag poles, gymnasium equipment, stadium and arena seating, jail cell work, jail cell beds, benches, bunks, chairs, tables, mirrors, jail cell access doors, rigging and installation of machinery and equipment (erecting, aligning, anchoring and dismantling, erection and dismantling of tower cranes, derrick monorail systems, Chicago booms, overhead cranes, gantries, material and personnel hoists, tanks, hoppers and conveyors. All pre-engineered metal buildings and their entirety including siding, roof mg, gutters, downspouts and erection of all.

Ornamental Iron Work but not limited to: all work in connection with field fabrication, handling including loading/off loading, sorting, cutting, fastening, anchoring, bending, hoisting, placing, burning, welding and tying, dismantling of all materials used in miscellaneous iron or steel, for stairs, hand railings, rolling doors, rolling gates, rolling shutters, fence, windows, curtain wall, erection and welding of ah metal, sash, architectural and ornamental treatments, but not necessarily limited to all sizes and types of ornamental, steel iron, lead, bronze, brass, copper, aluminum, all ferrous and nonferrous metals and composite materials.

Fence Erector Iron Worker but not limited to: All work in connection with the field fabrication and erection of chain link fence, which includes but not limited to the loading and of the fence fabric and posts also the installation of the above.

Reinforcing Iron Work but not limited to: Any work in connection with field fabrication, handling, racking, sorting, cutting, bending, hoisting, placing, burning, welding and tying of all materials used to reinforce concrete construction, except the loading and unloading by hand and carrying to a centralized point adjacent to or upon site of the project on which such materials are to be used. Realigning of reinforcing iron, wire mess placing, bricking, pulling and similar reinforcing materials, placing steel dowels, as well as refastening and resetting same while concrete is being poured. Reinforcing steel and wire mess in roadways and sidewalks in connection with building construction, also erection and fabrication of preconnection with building construction, also erection and fabrication of prestressed and precast joist, beams, columns, and slabs, walls, roofs, tanks, manholes, trenches and covers. The handling and placing of “J” or Jack bars on slip form construction; the placing of all clips, bolts, steel rods and wire fabric or mesh pertaining to gunite construction; the placing of steel-tex or paper-back mesh used for reinforcing and placing wire mesh to reinforce gypsum roof construction. Metal decking similar “corruform” used for floor forms over metal or concrete supports whether welded or clipped. Post tension. All loading and unloading, hoisting, placing and tying of all post tensioning cables. Wrecking of cones, wedging of tendons, stressing, cutting and repairing.

Prevailing Wage Rate
Skilled Crafts

Name of Union: Labor HevHwy 3

Type of Rate: Commercial

Change #: LCN01-2026ib

Craft: Laborer

Effective Date: 5/1/2026

Effective Date: 5/1/2026

	BHR		Fringe Benefit Payments						Irrevocable Fund		Total PWR	Overtime Rate
			H&W	Pension	App Tr.	Vac.	Annuity	Other	LECET (*)	MISC (*)		
Classification												
Laborer Group 1	$38.77		$9.45	$4.60	$0.45	$0.00	$2.50	$0.00	$0.10	$0.00	$55.87	$75.25
Group 2	$38.94		$9.45	$4.60	$0.45	$0.00	$2.50	$0.00	$0.10	$0.00	$56.04	$75.51
Group 3	$39.27		$9.45	$4.60	$0.45	$0.00	$2.50	$0.00	$0.10	$0.00	$56.37	$76.00
Group 4	$39.72		$9.45	$4.60	$0.45	$0.00	$2.50	$0.00	$0.10	$0.00	$56.82	$76.68
Watch Person	$33.50		$9.45	$4.60	$0.45	$0.00	$2.50	$0.00	$0.10	$0.00	$50.60	$67.35
Apprentice	BHR	Percent										
0-1000 hrs	$31.02	$80.00	$9.45	$4.60	$0.45	$0.00	$2.50	$0.00	$0.10	$0.00	$48.12	$63.63
1001-2000 hrs	$32.95	$85.00	$9.45	$4.60	$0.45	$0.00	$2.50	$0.00	$0.10	$0.00	$50.05	$66.53
2001-3000 hrs	$34.89	$90.00	$9.45	$4.60	$0.45	$0.00	$2.50	$0.00	$0.10	$0.00	$51.99	$69.44
3001-4000 hrs	$36.83	$95.00	$9.45	$4.60	$0.45	$0.00	$2.50	$0.00	$0.10	$0.00	$53.93	$72.34
More than 4000 hrs	$38.77	$100.00	$9.45	$4.60	$0.45	$0.00	$2.50	$0.00	$0.10	$0.00	$55.87	$75.25

(*)Special Calculation Note :

Tunnel Laborer rate with air-pressurized add $1.00 to the above wage rate.

Commercial Driver's License – Any Laborer required to utilize a valid Commercial Driver's License (CDL), are in compliance with necessary FMCSA regulations and approved by the Contractor to operate a Commercial Motor Vehicle (CMV), shall be paid one dollar ($1.00) per hour above the base rate for the entirety of their working shift.

Ratio :

1 Journeyman to 1 Apprentice
3 Journeymen to 1 Apprentice thereafter

Watchmen have no Apprentices

Jurisdiction (* denotes special jurisdictional note) :

Adams, Allen, Ashland, Athens, Auglaize, Belmont, Brown, Butler, Carroll, Champaign, Clark, Clermont, Clinton, Columbiana, Coshocton, Crawford, Darke, Defiance, Delaware, Fairfield, Fayette, Franklin, Fulton, Gallia, Greene, Guernsey, Hamilton, Hancock, Hardin, Harrison, Henry, Highland, Hocking, Holmes, Jackson, Jefferson, Knox, Lawrence, Licking, Logan, Madison, Marion, Meigs, Mercer, Miami, Monroe, Montgomery, Morgan, Morrow, Muskingum, Noble, Paulding, Perry, Pickaway, Pike, Preble, Putnam, Richland, Ross, Scioto, Seneca, Shelby, Tuscarawas, Union, Van Wert, Vinton, Warren, Washington, Wayne, Williams, Wyandot

Special Jurisdictional Note :

Hod Carriers and Common Laborers - Heavy, Highway, Sewer, Waterworks, Utility, Airport, Railroad, Industrial and Building Site, Sewer Plant, Waste Water Treatment Facilities Construction

Details :

Group 1 Laborer (Construction); Plant Laborer or Yardman, Right-of-way Laborer, Landscape Laborer, Highway Lighting Worker, Signalization Worker, (Swimming) Pool Construction Laborer, Utility Man, *Bridge Man, Handyman, Joint Setter, Flagperson, Carpenter Helper, Waterproofing Laborer, Slurry Seal, Seal Coating, Surface Treatment or Road Mix Laborer, Riprap Laborer & Grouter, Asphalt Laborer, Dump Man (batch trucks), Guardrail & Fence Installer, Mesh Handler & Placer, Concrete Curing Applicator, Scaffold Erector, Sign Installer, Hazardous Waste (level D), Diver Helper, Zone Person and Traffic Control. *Bridge Man will perform work as per the October 31, 1949, memorandum on concrete forms, by and between the United Brotherhood of Carpenters and Joiners of America and the Laborers' International Union of North America, which states in; "the moving, cleaning, oiling and carrying to the next point of erection, and the stripping of forms which are not to be re-used, and forms on all flat arch work shall be done by members of the Laborers' International Union of North America."

Group 2 Asphalt Raker, Screwman or Paver, Concrete Puddler, Kettle Man (pipeline), All Machine-Driven Tools (Gas, Electric, Air), Mason Tender, Brick Paver, Mortar Mixer, Skid Steer, Sheeting & Shoring Person, Surface Grinder Person, Screedperson, Water Blast, Hand Held Wand, Power Buggy or Power Wheelbarrow, Paint Striper, Plastic fusing Machine Operator, Rodding Machine Operator, Pug Mill Operator, Operator of All Vacuum Devices Wet or Dry, Handling of all Pumps 4 inches and under (gas, air or electric), Diver, Form Setter, Bottom Person, Welder Helper (pipeline), Concrete Saw Person, Cutting with Burning Torch, Pipe Layer, Hand Spiker (railroad), Underground Person (working in sewer and waterline, cleaning, repairing and reconditioning). Tunnel Laborer (without air),Caisson, Cofferdam (below 25 feet deep), Air Track and Wagon Drill, Sandblaster Nozzle Person, Hazardous Waste (level B), ***Lead Abatement, Hazardous Waste (level C) ***Includes the erecting of structures for the removal, including the encapsulation and containment of Lead abatement process.

Group 3 Blast and Powder Person, Muckers will be defined as shovel men working directly with the miners, Wrencher (mechanical joints & utility pipeline), Yarner, Top Lander, Hazardous Waste (level A), Concrete Specialist, Curb Setter and Cutter, Grade Checker, Concrete Crew in Tunnels. Utility pipeline Tappers, Waterline, Caulker, Signal Person will receive the rate equal to the rate paid the Laborer classification for which the Laborer is signaling.

Group 4 Miner, Welder, Gunite Nozzle Person A.) The Watchperson shall be responsible to patrol and maintain a safe traffic zone including but not limited to barrels, cones, signs, arrow boards, message boards etc. The responsibility of a watchperson is to see that the equipment, job and office trailer etc. are secure.

Prevailing Wage Rate
Skilled Crafts

Name of Union: Labor Local 265 Building

Type of Rate: Commercial

Change #: LCN01-2026ib

Craft: Laborer

Effective Date: 6/10/2026

Effective Date: 6/10/2026

	BHR		Fringe Benefit Payments						Irrevocable Fund		Total PWR	Overtime Rate
			H&W	Pension	App Tr.	Vac.	Annuity	Other	LECET (*)	MISC (*)		
Classification												
Laborer	$27.05		$9.45	$9.90	$0.40	$0.00	$0.00	$0.00	$0.10	$0.00	$46.90	$60.43
Apprentice	BHR	Percent										
0-1000 Hours	$21.64	$80.00	$9.45	$9.90	$0.40	$0.00	$0.00	$0.00	$0.10	$0.00	$41.49	$52.31
1001 - 2000 Hours	$22.99	$85.00	$9.45	$9.90	$0.40	$0.00	$0.00	$0.00	$0.10	$0.00	$42.84	$54.34
2001 - 3000 Hours	$24.35	$90.00	$9.45	$9.90	$0.40	$0.00	$0.00	$0.00	$0.10	$0.00	$44.20	$56.38
3001 - 4000 Hours	$25.70	$95.00	$9.45	$9.90	$0.40	$0.00	$0.00	$0.00	$0.10	$0.00	$45.55	$58.40
More than 4000 Hours	$27.05	$100.00	$9.45	$9.90	$0.40	$0.00	$0.00	$0.00	$0.10	$0.00	$46.90	$60.43

(*)Special Calculation Note :

Ratio :

1 Journeymen to 1 Apprentice
3 Journeymen to 1 Apprentice thereafter

Jurisdiction (* denotes special jurisdictional note) :

Brown, Clermont, Clinton, Hamilton

Special Jurisdictional Note :

Details :

Building & Common Laborer, Asbestos Removal, Cement Mason Helpers, Hand Operated Mechanical Mule, Mechanical Mule, Mechanical Sweeper, Signaler, Flagger Wrecking Laborer, Bottom Man, Pipe Layer, Skid Steer, Industrial Fork Lift Operator, Burning Torch Operator, Jack Hammer, Air Spade, Chipping Hammer, Mechanical & Air Tamper Operator, Mechanical Concrete Buggies, Power Operated Mechanical Mule, Concrete Pump Hose Man, Vibrator Man, CERCLA Trained Hazardous, Material Removal (Levels A,B & C), High Lifts, Lulls and Dingo, Tunnel Laborer.

Prevailing Wage Rate
Skilled Crafts

Name of Union: Labor Local 265A Mason Tender

Type of Rate: Commercial

Change #: LCN01-2026ib

Craft: Laborer

Effective Date: 6/10/2026

Effective Date: 6/10/2026

	BHR		Fringe Benefit Payments						Irrevocable Fund		Total PWR	Overtime Rate
			H&W	Pension	App Tr.	Vac.	Annuity	Other	LECET (*)	MISC (*)		
Classification												
Laborer Mason Tender/ Scaffolding/ Forklift Operator	$26.80		$9.45	$9.90	$0.40	$0.00	$0.00	$0.00	$0.10	$0.00	$46.65	$60.05
Apprentice	BHR	Percent										
0-1000 Hours	$21.44	$80.00	$9.45	$9.90	$0.40	$0.00	$0.00	$0.00	$0.10	$0.00	$41.29	$52.01
1001-2000 Hours	$22.78	$85.00	$9.45	$9.90	$0.40	$0.00	$0.00	$0.00	$0.10	$0.00	$42.63	$54.02
2001-3000 Hours	$24.12	$90.00	$9.45	$9.90	$0.40	$0.00	$0.00	$0.00	$0.10	$0.00	$43.97	$56.03
3001-4000 Hours	$25.46	$95.00	$9.45	$9.90	$0.40	$0.00	$0.00	$0.00	$0.10	$0.00	$45.31	$58.04
Over 4000 Hours	$26.80	$100.00	$9.45	$9.90	$0.40	$0.00	$0.00	$0.00	$0.10	$0.00	$46.65	$60.05

(*)Special Calculation Note :

Ratio :

1 Journeymen to 1 Apprentice
3 Journeymen to 1 Apprentice thereafter

Jurisdiction (* denotes special jurisdictional note) :

Brown, Clermont, Clinton, Hamilton

Special Jurisdictional Note :

Details :

TENDERS: The tending of Masons and mixing, handling and conveying of all materials used by Brick or Stone Masons, whether done by hand or by any other procedure including but not limited to, all forklifts or other mechanical means, all heating and drying off all materials used by Brick or Stone Masons and cleaning and clearing of all debris.

SCAFFOLDING: The building and dismantling of scaffolding and staging for Masons shall be the work of the Mason Tenders.

Prevailing Wage Rate
Skilled Crafts

Name of Union: Operating Engineers - Building Local 18 - Zone III

Type of Rate: Commercial

Change #: LCN01-2026ib

Craft: Operating Engineer

Effective Date: 5/1/2026

Effective Date: 5/1/2026

	BHR		Fringe Benefit Payments						Irrevocable Fund		Total PWR	Overtime Rate
			H&W	Pension	App Tr.	Vac.	Annuity	Other	LECET (*)	MISC (*)		
Classification												
Operator Group A	$47.29		$10.01	$6.25	$1.00	$0.00	$0.00	$0.09	$0.00	$0.10	$64.74	$88.39
Operator Group B	$47.17		$10.01	$6.25	$1.00	$0.00	$0.00	$0.09	$0.00	$0.10	$64.62	$88.20
Operator Group C	$46.13		$10.01	$6.25	$1.00	$0.00	$0.00	$0.09	$0.00	$0.10	$63.58	$86.65
Operator Group D	$44.95		$10.01	$6.25	$1.00	$0.00	$0.00	$0.09	$0.00	$0.10	$62.40	$84.88
Operator Group E	$39.49		$10.01	$6.25	$1.00	$0.00	$0.00	$0.09	$0.00	$0.10	$56.94	$76.69
Master Mechanic	$48.29		$10.01	$6.25	$1.00	$0.00	$0.00	$0.09	$0.00	$0.10	$65.74	$89.89
Lift Director	$48.29		$10.01	$6.25	$1.00	$0.00	$0.00	$0.09	$0.00	$0.10	$65.74	$89.89
Cranes & Mobile Concrete Pumps 150'-180'	$47.79		$10.01	$6.25	$1.00	$0.00	$0.00	$0.09	$0.00	$0.10	$65.24	$89.14
Cranes & Mobile Concrete Pumps 180'-249'	$48.29		$10.01	$6.25	$1.00	$0.00	$0.00	$0.09	$0.00	$0.10	$65.74	$89.89
Cranes & Mobile Concrete Pumps 249' and over	$48.54		$10.01	$6.25	$1.00	$0.00	$0.00	$0.09	$0.00	$0.10	$65.99	$90.26
Apprentice	BHR	Percent										
1st Year	$23.65	$50.02	$10.01	$6.25	$1.00	$0.00	$0.00	$0.09	$0.00	$0.10	$41.10	$52.92
2nd Year	$28.37	$60.00	$10.01	$6.25	$1.00	$0.00	$0.00	$0.09	$0.00	$0.10	$45.82	$60.00
3rd Year	$33.10	$70.00	$10.01	$6.25	$1.00	$0.00	$0.00	$0.09	$0.00	$0.10	$50.55	$67.10
4th Year	$37.83	$80.00	$10.01	$6.25	$1.00	$0.00	$0.00	$0.09	$0.00	$0.10	$55.28	$74.19
Field Mechanic Trainee	$	$	$	$	$	$	$	$	$	$	$	$
1st Year	$28.37	$60.00	$10.01	$6.25	$1.00	$0.00	$0.00	$0.09	$0.00	$0.00	$45.72	$59.91
2nd Year	$33.10	$70.00	$10.01	$6.25	$1.00	$0.00	$0.00	$0.09	$0.00	$0.00	$50.45	$67.00
3rd Year	$37.83	$80.00	$10.01	$6.25	$1.00	$0.00	$0.00	$0.09	$0.00	$0.00	$55.18	$74.09
4th Year	$42.56	$90.00	$10.01	$6.25	$1.00	$0.00	$0.00	$0.09	$0.00	$0.00	$59.91	$81.19

(*)Special Calculation Note :

Other: Education & Safety
Misc: National Training

Note: There will be a 10% increase for the apprentices on top of the percentages listed above provided they are operating mobile equipment.

Ratio :

For every (3) Operating Engineer Journeymen employed by the company there may be employed (1) Registered Apprentice or trainee Engineer through the referral when they are available. An apprenice, while employed as part of a crew per Article VIII, paragraph 77, will not be subject to the apprenticeship ratios in this collective bargaining agreement

Jurisdiction (* denotes special jurisdictional note) :

Adams, Allen, Ashland, Athens, Auglaize, Belmont, Brown, Butler, Carroll, Champaign, Clark, Clermont, Clinton, Coshocton, Crawford, Darke, Defiance, Delaware, Fairfield, Fayette, Franklin, Fulton, Gallia, Greene, Guernsey, Hamilton, Hancock, Hardin, Harrison, Henry, Highland, Hocking, Holmes, Jackson, Jefferson, Knox, Lawrence, Licking, Logan, Madison, Marion, Meigs, Mercer, Miami, Monroe, Montgomery, Morgan, Morrow, Muskingum, Noble, Ottawa, Paulding, Perry, Pickaway, Pike, Preble, Putnam, Richland, Ross, Sandusky, Scioto, Seneca, Shelby, Stark, Tuscarawas, Union, Van Wert, Vinton, Warren, Washington, Wayne, Williams, Wyandot

Special Jurisdictional Note :

Details :

Group A- Barrier Moving Machines; Boiler Operators or Compressor Operators, when compressor or boiler is mounted on crane (Piggyback Operation); Boom Trucks (all types); Cableways Cherry Pickers; Combination - Concrete Mixers & Towers; All Concrete Pumps with Booms; Cranes (all types); Compact Cranes, track or rubber over 4,000 pounds capacity; Cranes self-erecting, stationary, track or truck (all configurations); Derricks (all types); Draglines; Dredges (dipper, clam or suction) 3-man crew; Elevating Graders or Euclid Loaders; Floating Equipment; Forklift (rough terrain with winch/hoist); Gradalls; Helicopter Operators, hoisting building materials; Helicopter Winch Operators, Hoisting building materials; Hoes (All types); Hoists (with two or more drums in use); Horizonal Directional Drill; Hydraulic Gantry (lift system); Laser Finishing Machines; Laser Screed and like equipment; Lift Slab or Panel Jack Operators; Locomotives (all types); Maintenance Operator/Technician(Mechanic Operator/Technician and/or Welder); Mixers, paving (multiple drum); Mobile Concrete Pumps, with booms; Panelboards, (all types on site); Pile Drivers; Power Shovels; Prentice Loader; Rail Tamper (with automatic lifting and aligning device); Rotary Drills (all), used on caissons for foundations and sub-structure; Side Booms; Slip Form Pavers; Straddle Carriers (Building Construction on site); Trench Machines (over 24” wide); Tug Boats.

Group B - Articulating/end dumps (minus $4.00/hour from Group B rate); Asphalt Pavers; Bobcat-type and/or skid steer loader with hoe attachment greater than 7000 lbs.; Bulldozers; CMI type Equipment; Concrete Saw, Vermeer-type; Endloaders; Hydro Milling Machine; Kolman-type Loaders (Dirt Loading); Lead Greasemen; Mucking Machines; Pettibone-Rail Equipment; Power Graders; Power Scoops; Power Scrapers; Push Cats;, Rotomills (all), grinders and planers of all types.

Group C - A-Frames; Air Compressors, Pressurizing Shafts or Tunnels; All Asphalt Rollers; Bobcat-type and/or Skid Steer Loader with or without attachments; Boilers (15 lbs. pressure and over); All Concrete Pumps (without booms with 5 inch system); Fork Lifts (except masonry); Highway Drills - all types (with integral power); Hoists (with one drum); House Elevators (except those automatic call button controlled), Buck Hoists, Transport Platforms, Construction Elevators; Hydro Vac/Excavator (when a second person is needed, the rate of pay will be “Class E”); Man Lifts; Material hoist/elevators; Mud Jacks; Pressure Grouting; Pump Operators (installing or operating Well Points or other types of Dewatering Systems); Pumps (4 inches and over discharge); Railroad Tie (Inserter/Remover); Rotovator (Lime-Soil Stabilizer); Submersible Pumps (4”and over discharge); Switch & Tie Tampers (without lifting and aligning device); Trench Machines (24” and under); Utility Operators.

Group D - Backfillers and Tampers; Ballast Re-locator; Batch Plant Operators; Bar and Joint Installing Machines; Bull Floats; Burlap and Curing Machines; Clefplanes; Compressors, on building construction; Concrete Mixers, more than one bag capacity; Concrete Mixers, one bag capacity (side loaders); All Concrete Pumps (without boom with 4” or smaller system); Concrete Spreader; Conveyors, used for handling building materials; Crushers; Deckhands; Drum Fireman (in asphalt plants); Farm type tractors pulling attachments; Finishing Machines; Form Trenchers; Generators: Gunite Machines; Hydro-seeders; Pavement Breakers (hydraulic or cable); Post Drivers; Post Hole Diggers; Pressure Pumps (over 1/2”) discharge); Road Widening Trenchers; Rollers (except asphalt); Self-propelled sub-graders; Shotcrete Machines; Tire Repairmen; Tractors, pulling sheepsfoot post roller or grader; VAC/ALLS; Vibratory Compactors, with integral power; Welders.

Group E – Allen Screed Paver (concrete); Boilers (less than 15 lbs. pressure); Cranes-Compact, track or rubber (under 4,000 pounds capacity); Directional Drill “Locator”; Fueling and greasing +$3.00; Inboard/outboard Motor Boat Launches; Light Plant Operators; Masonry Fork Lifts; Oilers/Helpers; Power Driven Heaters (oil fired); Power Scrubbers; Power Sweepers; Pumps (under 4 inch discharge); Signalperson, Submersible Pumps (under 4” discharge).

Master Mechanics - Master Mechanic

Cranes 150’ – 180’ - Boom & Jib 150 - 180 feet Cranes 180’ – 249’ - Boom & Jib 180 - 249 feet Cranes 250’ and over - Boom & Jib 250 feet or over

Prevailing Wage Rate
Skilled Crafts

Name of Union: Operating Engineers - HevHwy Zone II

Type of Rate: Commercial

Change #: LCN01-2026ib

Craft: Operating Engineer

Effective Date: 5/1/2026

Effective Date: 5/1/2026

	BHR		Fringe Benefit Payments						Irrevocable Fund		Total PWR	Overtime Rate
			H&W	Pension	App Tr.	Vac.	Annuity	Other	LECET (*)	MISC (*)		
Classification												
Operator Class A	$47.29		$10.01	$6.25	$1.00	$0.00	$0.00	$0.09	$0.00	$0.10	$64.74	$88.39
Operator Class B	$47.17		$10.01	$6.25	$1.00	$0.00	$0.00	$0.09	$0.00	$0.10	$64.62	$88.20
Operator Class C	$46.13		$10.01	$6.25	$1.00	$0.00	$0.00	$0.09	$0.00	$0.10	$63.58	$86.65
Operator Class D	$44.95		$10.01	$6.25	$1.00	$0.00	$0.00	$0.09	$0.00	$0.10	$62.40	$84.88
Operator Class E	$39.49		$10.01	$6.25	$1.00	$0.00	$0.00	$0.09	$0.00	$0.10	$56.94	$76.69
Master Mechanic	$48.29		$10.01	$6.25	$1.00	$0.00	$0.00	$0.09	$0.00	$0.10	$65.74	$89.89
Lift Director	$48.29		$10.01	$6.25	$1.00	$0.00	$0.00	$0.09	$0.00	$0.10	$65.74	$89.89
Crane and Mobile Concrete Pump 150' - 179'	$47.79		$10.01	$6.25	$1.00	$0.00	$0.00	$0.09	$0.00	$0.10	$65.24	$89.14
Crane and Mobile Concrete Pump 180' - 249'	$48.29		$10.01	$6.25	$1.00	$0.00	$0.00	$0.09	$0.00	$0.10	$65.74	$89.89
Crane and Mobile Concrete Pump 250' and Ove	$48.54		$10.01	$6.25	$1.00	$0.00	$0.00	$0.09	$0.00	$0.10	$65.99	$90.26
Apprentice	BHR	Percent										
1st Year	$23.64	$50.00	$10.01	$6.25	$1.00	$0.00	$0.00	$0.09	$0.00	$0.10	$41.09	$52.91
2nd Year	$28.37	$60.00	$10.01	$6.25	$1.00	$0.00	$0.00	$0.09	$0.00	$0.10	$45.82	$60.00
3rd Year	$33.10	$70.00	$10.01	$6.25	$1.00	$0.00	$0.00	$0.09	$0.00	$0.10	$50.55	$67.10
4th Year	$37.83	$80.00	$10.01	$6.25	$1.00	$0.00	$0.00	$0.09	$0.00	$0.10	$55.28	$74.19
Field Mech Trainee	$	$	$	$	$	$	$	$	$	$	$	$
1st year	$28.37	$60.00	$10.01	$6.25	$1.00	$0.00	$0.00	$0.09	$0.00	$0.00	$45.72	$59.91
2nd year	$33.10	$70.00	$10.01	$6.25	$1.00	$0.00	$0.00	$0.09	$0.00	$0.00	$50.45	$67.00
3rd year	$37.83	$80.00	$10.01	$6.25	$1.00	$0.00	$0.00	$0.09	$0.00	$0.00	$55.18	$74.09
4th year	$42.56	$90.00	$10.01	$6.25	$1.00	$0.00	$0.00	$0.09	$0.00	$0.00	$59.91	$81.19

(*)Special Calculation Note :

Other: Education & Safety Fund
Misc: National Training

**Apprentices wilt receive a 10% increase on top of the percentages listed above provided they are operating mobile equipment.

Ratio :

For every (3) Operating Engineer Journeymen employed by the company, there may be employed (1) Registered Apprentice or Trainee Engineer through the referral when they are available. An Apprentice, while employed as part of a crew per Article VIII, paragraph 68 will not be subject to the apprenticeship ratios in this collective bargaining agreement

Jurisdiction (* denotes special jurisdictional note) :

Adams, Allen, Ashland, Athens, Auglaize, Belmont, Brown, Butler, Carroll, Champaign, Clark, Clermont, Clinton, Coshocton, Crawford, Darke, Defiance, Delaware, Fairfield, Fayette, Franklin, Fulton, Gallia, Greene, Guernsey, Hamilton, Hancock, Hardin, Harrison, Henry, Highland, Hocking, Holmes, Huron, Jackson, Jefferson, Knox, Lawrence, Licking, Logan, Lucas, Madison, Marion, Meigs, Mercer, Miami, Monroe, Montgomery, Morgan, Morrow, Muskingum, Noble, Ottawa, Paulding, Perry, Pickaway, Pike, Preble, Putnam, Richland, Ross, Sandusky, Scioto, Seneca, Shelby, Stark, Tuscarawas, Union, Van Wert, Vinton, Warren, Washington, Wayne, Williams, Wood, Wyandot

Special Jurisdictional Note :

Details :

Class A - Air Compressors on Steel Erection; Asphalt Plant Engineers (Cleveland District Only); Barrier Moving Machine; Boiler Operators, Compressor Operators, or Generators, when mounted on a rig; Boom Trucks (all types); Cableways; Cherry Pickers; Combination- Concrete Mixers & Towers; Concrete Plants (over 4 yd capacity); Concrete Pumps; Cranes (all types); Compact Cranes track or rubber over 4,000 pounds capacity; Cranes self-erecting stationary, track or truck; Derricks (all types); Draglines; Dredges dipper, clam or suction; Elevating Graders or Euclid Loaders; Floating Equipment (all types); Gradalls; Helicopter Crew (Operator- hoist or winch); Hoes (all types); Hoisting Engines; Hoisting Engines, on shaft or tunnel work; Hydraulic Gantry (lifting system); Industrial-type Tractors; Jet Engine Dryer (D8 or D9) diesel Tractors; Locomotives (standard gauge); Maintenance Operators/Technicians (class A); Mixers, paving (single or double drum); Mucking Machines; Multiple Scrapers; Piledriving Machines (all types); Power Shovels, Prentice Loader; Quad 9 (double pusher); Rail Tamper (with automatic lifting and aligning device); Refrigerating Machines (freezer operation); Rotary Drills, on caisson work; Rough Terrain Fork Lift with winch/hoist; Side Booms; Slip Form Pavers; Survey Crew Party Chiefs; Tower Derricks; Tree Shredders; Trench Machines (over 24” wide); Truck Mounted Concrete Pumps; Tug Boats; Tunnel Machines and /or Mining Machines; Wheel Excavators.

Class B - Asphalt Pavers; Automatic Subgrade Machines, self-propelled (CMI-type); Bobcat-type and /or Skid Steer Loader with hoe attachment greater than 7000 lbs.; Boring Machine Operators (more than 48 inches); Bulldozers; Concrete Saws, Vermeer type; Endloaders; Horizontal Directional Drill (50,000 ft. lbs. thrust and over); Hydro Milling Machine; Kolman-type Loaders (production type-dirt); Lead Greasemen; Lighting and Traffic Signal Installation Equipment includes all groups or classifications; Maintenance Operators/Technicians, Class B; Material Transfer Equipment (shuttle buggy) Asphalt; Pettibone-Rail Equipment; Power Graders; Power Scrapers; Push Cats; Rotomills (all), Grinders and Planners of all types, Groovers (excluding walk-behinds); Trench Machines (24 inch wide and under).

Class C - A-Frames; Air Compressors, on tunnel work (low Pressure); Articulating/straight bed end dumps if assigned (minus $4.00 per hour); Asphalt Plant Engineers (Portage and Summit Counties only); Bobcat-type and/or skid steer loader with or without attachments; Drones; Highway Drills (all types); HydroVac/Excavator (when a second person is needed, the rate of pay will be “Class E”); Locomotives (narrow gauge); Material Hoist/Elevators; Mixers, concrete (more than one bag capacity); Mixers, one bag capacity (side loader); Power Boilers (over 15 lbs. pressure); Pump Operators (installing or operating well Points); Pumps (4 inch and over discharge); Railroad Tie Inserter/Remover; Rollers, Asphalt; Rotovator (lime-soil Stabilizer); Switch & Tie Tampers (without lifting and aligning device); Utilities Operators, (small equipment); Welding Machines and Generators.

Class D – Backfillers and Tampers; Ballast Re-locator; Bar and Joint Installing Machines; Batch Plant Operators; Boring Machine Operators (48 inch or less); Bull Floats; Burlap and Curing Machines; Concrete Plants (capacity 4 yds. and under); Concrete Saws (multiple); Conveyors (highway); Crushers; Deckhands; Farm type tractors, with attachments (highway); Finishing Machines; Firemen, Floating Equipment (all types); Fork Lifts (highway), except masonry; Form Trenchers; Hydro Hammers; Hydro Seeders; Pavement Breakers (hydraulic or cable); Plant Mixers; Post Drivers; Post Hole Diggers; Power Brush Burners; Power Form Handling Equipment; Road Widening Trenchers; Rollers (brick, grade, macadam); Self-Propelled Power Spreaders; Self-Propelled Sub-Graders; Steam Firemen; Survey Instrument men; Tractors, pulling sheepsfoot rollers or graders; Vibratory Compactors, with integral power.

Class E - Compressors (portable, Sewer, Heavy and Highway); Cranes-Compact, track or rubber under 4,000 pound capacity; Drum Firemen (asphalt plant); Fueling and greasing (Primary Operator with Specialized CDL Endorsement Add $3.00/hr); Generators; Inboard-Outboard Motor Boat Launches; Masonry Fork Lifts; Oil Heaters (asphalt plant); Oilers/Helpers; Power Driven Heaters (oil fired); Power Scrubbers; Power Sweepers; Pumps (under 4 inch discharge); Signalperson; Survey Rodmen or Chairmen; Tire Repairmen; VAC/ALLS.

Master Mechanic - Master Mechanic

Cranes and Mobile Concrete Pumps 150' -179' - Boom & Jib 150 - 179 feet Cranes and Mobile Concrete Pumps 180' - 249' - Boom & Jib 180 - 249 feet Cranes and Mobile Concrete Pumps 250' and over - Boom & Jib 250 feet or over

Prevailing Wage Rate
Skilled Crafts

Name of Union: Painter Local 123 & 238 Commercial & Industrial

Type of Rate: Commercial

Change #: LCN01-2026ib

Craft: Painter

Effective Date: 6/17/2026

Effective Date: 6/17/2026

	BHR		Fringe Benefit Payments						Irrevocable Fund		Total PWR	Overtime Rate
			H&W	Pension	App Tr.	Vac.	Annuity	Other	LECET (*)	MISC (*)		
Classification												
Painter Brush Roll	$30.84		$7.30	$7.50	$0.31	$0.00	$0.00	$0.00	$0.00	$0.00	$45.95	$61.37
Paper Hanger	$30.84		$7.30	$7.50	$0.31	$0.00	$0.00	$0.00	$0.00	$0.00	$45.95	$61.37
Spray Painter	$31.34		$7.30	$7.50	$0.31	$0.00	$0.00	$0.00	$0.00	$0.00	$46.45	$62.12
Sand Blaster Water Blaster	$31.59		$7.30	$7.50	$0.31	$0.00	$0.00	$0.00	$0.00	$0.00	$46.70	$62.49
Elevated Tanks	$31.84		$7.30	$7.50	$0.31	$0.00	$0.00	$0.00	$0.00	$0.00	$46.95	$62.87
Apprentice	BHR	Percent										
1st Year	$20.05	$65.00	$7.30	$2.60	$0.31	$0.00	$0.00	$0.00	$0.00	$0.00	$30.26	$40.29
2nd Year	$21.59	$70.00	$7.30	$2.60	$0.31	$0.00	$0.00	$0.00	$0.00	$0.00	$31.80	$42.59
3rd Year	$24.67	$80.00	$7.30	$2.60	$0.31	$0.00	$0.00	$0.00	$0.00	$0.00	$34.88	$47.22
4th Year	$27.76	$90.00	$7.30	$2.60	$0.31	$0.00	$0.00	$0.00	$0.00	$0.00	$37.97	$51.85

(*)Special Calculation Note :

Apprentices shall be paid the proper % of the classification above.

Ratio :

1 Journeyman to 1 Apprentice

Jurisdiction (* denotes special jurisdictional note) :

Brown, Butler, Clermont, Clinton, Hamilton, Warren

Special Jurisdictional Note :

Details :

Industrial Work paid as commercial work above for each class which includes, Industrial Plants, repair garages, processing plants, storage tanks, warehouses, skeletons structures, bridges unless highest point of clearance is 60 feet or more whether new or old construction offices and office buildings in industrial sites are at industrial rates. Heavy & Highway Bridges-Guard Rails- Light Poles. A hazardous steeplejack rate shall apply on radio towers, stacks, light towers, water towers, steeples, skeleton steel, and exterior industrial conveyors over 25 feet, where such items require steeplejack methods and the rate of pay shall be a $1.00 per hour above the industrial rate. Steeplejack rate to apply to bridges where highest point of clearance is 60 feet.

Prevailing Wage Rate
Skilled Crafts

Name of Union: Painter Local 123 & 238 Drywall

Type of Rate: Commercial

Change #: LCN02-2026ib

Craft: Painter

Effective Date: 5/1/2026

Effective Date: 5/1/2026

	BHR		Fringe Benefit Payments						Irrevocable Fund		Total PWR	Overtime Rate
			H&W	Pension	App Tr.	Vac.	Annuity	Other	LECET (*)	MISC (*)		
Classification												
Painter Drywall Finisher	$35.24		$7.30	$7.50	$0.31	$0.00	$0.00	$0.00	$0.00	$0.00	$50.35	$67.97
Apprentice	BHR	Percent										
1st Year	$26.43	$75.00	$7.30	$2.60	$0.31	$0.00	$0.00	$0.00	$0.00	$0.00	$36.64	$49.85
2nd Year	$29.95	$85.00	$7.30	$2.60	$0.31	$0.00	$0.00	$0.00	$0.00	$0.00	$40.16	$55.13
3rd Year	$33.48	$95.00	$7.30	$2.60	$0.31	$0.00	$0.00	$0.00	$0.00	$0.00	$43.69	$60.43

(*)Special Calculation Note :

High Pay – Over 60ft add $1.00 an hour

Ratio :

1 Journeyman to 1 Apprentice

Jurisdiction (* denotes special jurisdictional note) :

Brown, Butler, Clermont, Clinton, Hamilton, Warren

Special Jurisdictional Note :

Details :

Industrial Work paid as commercial work above for each class which includes: Industrial Plants, repair garages, processing plants, storage tanks, warehouses, skeletons structures, bridges unless highest point of clearance is 60 feet or more whether new or old construction offices and office buildings in industrial sites are at industrial rates. Heavy & Highway Bridges - Guard Rails - Light Poles.

Prevailing Wage Rate
Skilled Crafts

Name of Union: Painter Local 123 & 238 Hvy Hwy

Type of Rate: Commercial

Change #: LCN01-2026ib

Craft: Painter

Effective Date: 6/17/2026

Effective Date: 6/17/2026

	BHR		Fringe Benefit Payments						Irrevocable Fund		Total PWR	Overtime Rate
			H&W	Pension	App Tr.	Vac.	Annuity	Other	LECET (*)	MISC (*)		
Classification												
Painter Bridge - Class 1	$41.23		$7.30	$7.50	$0.31	$0.00	$0.00	$0.00	$0.00	$0.00	$56.34	$76.95
Bridge Painter, Rigger, Containment Builder, Spot Blaster - Class 2	$34.23		$7.30	$7.50	$0.31	$0.00	$0.00	$0.00	$0.00	$0.00	$49.34	$66.45
Equipment Operator/ Field Mechanic, Grit Reclamation, Paint Mixer, Traffic Control, Boat Person - Class 3	$34.23		$7.30	$7.50	$0.31	$0.00	$0.00	$0.00	$0.00	$0.00	$49.34	$66.45
Concrete Sealing, Concrete Blasting/Power Washing, Etc. - Class 4	$34.23		$7.30	$7.50	$0.31	$0.00	$0.00	$0.00	$0.00	$0.00	$49.34	$66.45
Quality Control/Quality Assurance, Traffic Safety, Competent Person - Class 5	$34.23		$7.30	$7.50	$0.31	$0.00	$0.00	$0.00	$0.00	$0.00	$49.34	$66.45
Apprentice	BHR	Percent										
1st Year	$30.92	$75.00	$7.30	$2.60	$0.31	$0.00	$0.00	$0.00	$0.00	$0.00	$41.13	$56.59
2nd Year	$35.05	$85.00	$7.30	$2.60	$0.31	$0.00	$0.00	$0.00	$0.00	$0.00	$45.26	$62.78
3rd Year	$39.17	$95.00	$7.30	$2.60	$0.31	$0.00	$0.00	$0.00	$0.00	$0.00	$49.38	$68.97

(*)Special Calculation Note :

Apprentices shall be paid proper % of the classification above

Ratio :

1 Journeyman to 1 Apprentice

Jurisdiction (* denotes special jurisdictional note) :

Brown, Butler, Clermont, Clinton, Hamilton, Warren

Special Jurisdictional Note :

Details :

Industrial Work paid as commercial work above for each class which includes, Industrial Plants, repair garages, processing plants, storage tanks, warehouses, skeletons structures, bridges unless highest point of clearance is 60 feet or more whether new or old construction offices and office buildings in industrial sites are at industrial rates.

Heavy & Highway Bridges - Guard Rails - Light Poles.

A hazardous steeplejack rate shall apply on radio towers, stacks, light towers, water towers, steeples, skeleton steel, and exterior industrial conveyors over 25 feet, where such items require steeplejack methods and the rate of pay shall be a $1.00 per hour above the industrial rate. Steeplejack rate to apply to bridges where highest point of clearance is 60 feet.

Class 1 – Abrasive blasting of any kind.

Class 2 – Bridge painting, coating application of any kind. All steel surface preparation other than abrasive blasting. All necessary rigging and containment building. All remedial/ spot blasting.

Class 3 – Tend to all equipment including but not limited to abrasive basting, power washing, spray painting, forklifts, hoists, trucks, etc. Load and unload trucks, handle materials, man safety boats, handle traffic control, clean up/ vacuum abrasive blast materials and related tasks.

Class 4 – All aspects of concrete coating/ sealing including but not limited to preparation, containment, etc.

Class 5 – Verify and record that all work is completed according to job specifications. Assure that all health and safety standards are adhered to. Assure all traffic is safely handled.

Prevailing Wage Rate
Skilled Crafts

Name of Union: Painter Local 639 Sign and Display

Type of Rate: Commercial

Change #: LCN01-2025ib

Craft: Painter

Effective Date: 6/18/2025

Effective Date: 6/18/2025

	BHR		Fringe Benefit Payments						Irrevocable Fund		Total PWR	Overtime Rate
			H&W	Pension	App Tr.	Vac.	Annuity	Other	LECET (*)	MISC (*)		
Classification												
Top Mechanic Class A	$27.53		$4.50	$0.00	$0.00	$0.00	$0.00	$1.45	$0.00	$0.00	$33.48	$47.25
Top Mechanic Class B	$27.53		$4.50	$0.75	$0.00	$0.53	$0.00	$1.45	$0.00	$0.00	$34.76	$48.53
Top Helper Class A	$22.33		$4.50	$0.00	$0.00	$0.00	$0.00	$1.20	$0.00	$0.00	$28.03	$39.20
Top Helper Class B	$22.33		$4.50	$0.75	$0.00	$0.43	$0.00	$1.20	$0.00	$0.00	$29.21	$40.38
Helper Class A	$17.19		$4.50	$0.00	$0.00	$0.00	$0.00	$0.90	$0.00	$0.00	$22.59	$31.19
Helper Class B	$17.19		$4.50	$0.75	$0.00	$0.30	$0.00	$0.90	$0.00	$0.00	$23.64	$32.24
New Hire (90 Days)	$15.75		$4.50	$0.00	$0.00	$0.00	$0.00	$0.55	$0.00	$0.00	$20.80	$28.68
Apprentice	BHR	Percent										

(*)Special Calculation Note :

Other: Sick, Personal & Holiday Pay Swing Stage Rate: Employees shall receive a differential of $1.50 per hour for all hours worked on scaffolds four sections or higher, including any boom lifts and swing stage scaffolds. In addition, the rigging and derigging of hanging/suspended swing stage systems and rappelling/bolson chair work of a single employee will qualify for $1.50 differential, will be paid to a single lead Top Mechanic or single lead Top Helper on any given swing stage job, even when it includes multiple running rigs on a single jobsite.

Ratio :

Jurisdiction (* denotes special jurisdictional note) :

Adams, Allen, Ashland, Ashtabula, Athens, Auglaize, Belmont, Brown, Butler, Carroll, Champaign, Clark, Clermont, Clinton, Columbiana, Coshocton, Crawford, Cuyahoga, Darke, Defiance, Delaware, Erie, Fairfield, Fayette, Franklin, Fulton, Gallia, Geauga, Greene, Guernsey, Hamilton, Hancock, Hardin, Harrison, Henry, Highland, Hocking, Holmes, Huron, Jackson, Jefferson, Knox, Lake, Lawrence, Licking, Logan, Lorain, Lucas, Madison, Mahoning, Marion, Medina, Meigs, Mercer, Miami, Monroe, Montgomery, Morgan, Morrow, Muskingum, Noble, Ottawa, Paulding, Perry, Pickaway, Pike, Portage, Preble, Putnam, Richland, Ross, Sandusky, Scioto, Seneca, Shelby, Stark, Summit, Trumbull, Tuscarawas, Union, Van Wert, Vinton, Warren, Washington, Wayne, Williams, Wood, Wyandot

Special Jurisdictional Note :

Details :

The work performed by employees covered by this rate shall include cleaning and refinishing of architectural metals using chemicals, solvents, coatings and hand-applied lacquer thinner, removing scratches from mirror finished metals, burnishing of bronze, statuary finishes on exterior and interior surfaces during the course of the restoration and maintenance of architectural metals, and other specialty metal finishing work, and the use of all tools required to perform such work, including but not limited to polishes, spray equipment and scaffolding. Class A: Less Than 1 Year of Service Class B: More Than 1 Year of Service Top Mechanic: Top Mechanic shall be responsible for ensuring the highest quality of workmanship by Helpers, and be highly competent and knowledgeable in the following areas: coatings, both solvent and waterborne, spraying ability, stainless steel, aluminum and bronze finishing, scaffolding and swing stage work. The Top Mechanic shall also be responsible for providing necessary training of employees in lower classifications and for directing all employees in his/her crew to perform their responsibilities in a productive and efficient manner. Top Helper: For existing Top Helpers at the time of this Agreement shall, in addition to performing the responsibilities of a Helper, be responsible and accountable for the setup, breakdown, safety and quality of the Company's product. Helper: A Helper shall be responsible for performing tasks in refinishing, compliance with safety procedures, setting up and breaking down job sites, setting up and breaking down scaffolding and swing stages, preparing surfaces for refinishing, including but not limited to masking and stripping, cleaning, oxidizing, polishing and scratch removal on various finishes.

Prevailing Wage Rate
Skilled Crafts

Name of Union: Painter Local 639 Zone 2 Sign

Type of Rate: Commercial

Change #: LCN01-2025ib

Craft: Painter

Effective Date: 5/28/2025

Effective Date: 5/28/2025

	BHR	Fringe Benefit Payments						Irrevocable Fund		Total PWR	Overtime Rate
		H&W	Pension	App Tr.	Vac.	Annuity	Other	LECET (*)	MISC (*)		
Classification											
Painter Sign Journeyman Tech/Team Leader Class A	$26.56	$3.36	$0.21	$0.00	$0.00	$0.00	$0.72	$0.00	$0.00	$30.85	$44.13
Painter Sign Journeyman Tech/Team Leader Class B	$26.56	$3.36	$0.21	$0.00	$0.51	$0.00	$0.72	$0.00	$0.00	$31.36	$44.64
Painter Sign Journeyman Tech/Team Leader Class C	$26.56	$3.36	$0.21	$0.00	$1.02	$0.00	$0.72	$0.00	$0.00	$31.87	$45.15
Painter Sign Journeyman Tech/Team Leader Class D	$26.56	$3.36	$0.21	$0.00	$1.53	$0.00	$0.72	$0.00	$0.00	$32.38	$45.66
Sign Journeyman Class A	$26.27	$3.36	$0.21	$0.00	$0.00	$0.00	$0.71	$0.00	$0.00	$30.55	$43.69
Sign Journeyman Class B	$26.27	$3.36	$0.21	$0.00	$0.51	$0.00	$0.71	$0.00	$0.00	$31.06	$44.20
Sign Journeyman Class C	$26.27	$3.36	$0.21	$0.00	$1.01	$0.00	$0.71	$0.00	$0.00	$31.56	$44.70
Sign Journeyman Class D	$26.27	$3.36	$0.21	$0.00	$1.52	$0.00	$0.71	$0.00	$0.00	$32.07	$45.21
Tech Sign Fabrication/ Erector Class A	$20.67	$3.36	$0.21	$0.00	$0.00	$0.00	$0.56	$0.00	$0.00	$24.80	$35.14
Tech Sign Fabrication/ Erector Class B	$20.67	$3.36	$0.21	$0.00	$0.40	$0.00	$0.56	$0.00	$0.00	$25.20	$35.54

Tech Sign Fabrication/ Erector Class C	$20.67		$3.36	$0.21	$0.00	$0.80	$0.00	$0.56	$0.00	$0.00	$25.60	$35.94
Tech Sign Fabrication/ Erector Class D	$20.67		$3.36	$0.21	$0.00	$1.19	$0.00	$0.56	$0.00	$0.00	$25.99	$36.33
Apprentice	BHR	Percent										

(*)Special Calculation Note :

Other is for paid holidays.

Ratio :

Jurisdiction (* denotes special jurisdictional note) :

Adams, Allen, Auglaize, Brown, Butler, Carroll, Champaign, Clark, Clermont, Clinton, Columbiana, Coshocton, Crawford, Darke, Defiance, Delaware, Erie, Fairfield, Fayette, Franklin, Fulton, Greene, Hamilton, Hancock, Hardin, Henry, Highland, Holmes, Huron, Jackson, Knox, Licking, Logan, Lorain, Lucas, Madison, Mahoning, Marion, Mercer, Miami, Montgomery, Morrow, Muskingum, Ottawa, Paulding, Perry, Pickaway, Pike, Preble, Putnam, Ross, Sandusky, Scioto, Seneca, Shelby, Stark, Trumbull, Tuscarawas, Union, Van Wert, Warren, Wayne, Williams, Wood, Wyandot

Special Jurisdictional Note :

Details :

Class A: less that 1 year. Class B: 1-3 years. Class C; 3-10 years. Class D: More than 10 years.

Prevailing Wage Rate
Skilled Crafts

Name of Union: Plasterer Local 132 (Cincinnati)

Type of Rate: Commercial

Change #: LCN01-2026ib

Craft: Plasterer

Effective Date: 7/1/2026

Effective Date: 7/1/2026

	BHR		Fringe Benefit Payments						Irrevocable Fund		Total PWR	Overtime Rate
			H&W	Pension	App Tr.	Vac.	Annuity	Other	LECET (*)	MISC (*)		
Classification												
Plasterer	$32.19		$8.20	$8.74	$0.70	$0.00	$1.00	$0.07	$0.00	$0.00	$50.90	$66.99
Apprentice	BHR	Percent										
1st 900 hours	$22.53	$70.00	$8.20	$0.00	$0.70	$0.00	$1.00	$0.07	$0.00	$0.00	$32.50	$43.77
2nd 900 hours	$23.82	$74.00	$8.20	$0.00	$0.70	$0.00	$1.00	$0.07	$0.00	$0.00	$33.79	$45.70
3rd 900 hours	$25.11	$78.00	$8.20	$7.74	$0.70	$0.00	$1.00	$0.07	$0.00	$0.00	$42.82	$55.38
4th 900 hours	$26.40	$82.00	$8.20	$7.74	$0.70	$0.00	$1.00	$0.07	$0.00	$0.00	$44.11	$57.31
5th 900 hours	$27.68	$86.00	$8.20	$7.74	$0.70	$0.00	$1.00	$0.07	$0.00	$0.00	$45.39	$59.23
6th 900 hours	$28.97	$90.00	$8.20	$7.74	$0.70	$0.00	$1.00	$0.07	$0.00	$0.00	$46.68	$61.16
7th 900 hours	$30.26	$94.00	$8.20	$7.74	$0.70	$0.00	$1.00	$0.07	$0.00	$0.00	$47.97	$63.10
8th 900 hours	$31.55	$98.00	$8.20	$7.74	$0.70	$0.00	$1.00	$0.07	$0.00	$0.00	$49.26	$65.03

(*)Special Calculation Note :

Other: International Training

Ratio :

1 Journeyman to 1 Apprentice
4 Journeyman to 2 Apprentices
7 Journeyman to 3 Apprentices

Jurisdiction (* denotes special jurisdictional note) :

Brown, Butler, Clermont, Hamilton, Highland, Warren

Special Jurisdictional Note :

Details :

Prevailing Wage Rate
Skilled Crafts

Name of Union: Plumber Pipefitter Local 392

Type of Rate: Commercial

Change #: LCN01-2026ib

Craft: Plumber Pipefitter

Effective Date: 6/1/2026

Effective Date: 6/1/2026

	BHR		Fringe Benefit Payments						Irrevocable Fund		Total PWR	Overtime Rate
			H&W	Pension	App Tr.	Vac.	Annuity	Other	LECET (*)	MISC (*)		
Classification												
Plumber Pipefitter	$46.20		$11.58	$13.00	$1.29	$0.00	$1.42	$0.83	$0.00	$0.00	$74.32	$97.42
Plumber Helper	$30.03		$11.48	$6.75	$1.29	$0.00	$0.92	$0.00	$0.00	$0.00	$50.47	$65.48
Apprentice	BHR	Percent										
1st Year	$24.02	$52.00	$11.38	$0.00	$1.29	$0.00	$1.42	$0.83	$0.00	$0.00	$38.94	$50.95
2nd Year	$25.41	$55.00	$11.38	$0.00	$1.29	$0.00	$1.42	$0.83	$0.00	$0.00	$40.33	$53.04
3rd Year	$26.80	$58.00	$11.38	$6.75	$1.29	$0.00	$1.42	$0.83	$0.00	$0.00	$48.47	$61.87
4th Year	$28.64	$62.00	$11.38	$6.75	$1.29	$0.00	$1.42	$0.83	$0.00	$0.00	$50.31	$64.63
5th Year	$34.65	$75.00	$11.38	$13.00	$1.29	$0.00	$1.42	$0.83	$0.00	$0.00	$62.57	$79.89

(*)Special Calculation Note :

OTHER: SUPPLEMENTAL UNEMPLOYMENT BENEFITS.

Ratio :

1 Journeyman to 1 Apprentice
2 Journeymen to 4 Apprentices
3 Journeymen to 6 Apprentices

When more than Sixteen (16) Journeymen are employed additional apprentices may be acquired at a ratio of one (1) apprentice to four (4) journeymen. Helper Ratio: 1 Journeyman to 2 Helpers

Jurisdiction (* denotes special jurisdictional note) :

Brown, Butler, Clermont, Hamilton, Warren

Special Jurisdictional Note :

Details :

Helpers shall be permitted to work on ONLY: Exterior Sewers, Concrete, Vitrified Clay or PVC Pipe and Digging and Backfilling for Piping Work

Prevailing Wage Rate
Skilled Crafts

Name of Union: Roofer Local 42

Type of Rate: Commercial

Change #: LCN01-2026ib

Craft: Roofer

Effective Date: 9/2/2026

Effective Date: 9/2/2026

	BHR		Fringe Benefit Payments						Irrevocable Fund		Total PWR	Overtime Rate
			H&W	Pension	App Tr.	Vac.	Annuity	Other	LECET (*)	MISC (*)		
Classification												
Roofer	$35.48		$9.00	$8.93	$0.70	$0.00	$2.00	$0.34	$0.00	$0.00	$56.45	$74.19
Tradesmen	$28.38		$7.20	$7.14	$0.00	$0.00	$2.00	$0.09	$0.00	$0.00	$44.81	$59.00
Apprentice	BHR	Percent										
1st Period	$23.06	$65.00	$9.00	$5.80	$0.00	$0.00	$2.00	$0.00	$0.00	$0.00	$39.86	$51.39
2nd Period	$24.84	$70.00	$9.00	$6.25	$0.00	$0.00	$2.00	$0.00	$0.00	$0.00	$42.09	$54.51
3rd Period	$28.38	$80.00	$9.00	$7.14	$0.00	$0.00	$2.00	$0.00	$0.00	$0.00	$46.52	$60.71

(*)Special Calculation Note :

Other is for Training Fund

Ratio :

2 Journeymen to 1 Apprentice

Jurisdiction (* denotes special jurisdictional note) :

Adams, Brown, Butler, Clermont, Hamilton, Highland, Pike, Warren

Special Jurisdictional Note :

Details :

Any Tradesman Worker completing 2,000 hours in (2) years may move to Journeyman status by utilizing the Training Yard to improve their skills. Tradesman Workers will be tested at these yards to determine their competency for Journeyman status. Tradesman Workers must schedule and successfully complete the industry test battery in order to gain journeyman status.

Prevailing Wage Rate
Skilled Crafts

Name of Union: Sheet Metal Local 24 (Cincinnati)

Type of Rate: Commercial

Change #: LCN01-2026ib

Craft: Sheet Metal Worker

Effective Date: 8/5/2026

Effective Date: 8/5/2026

	BHR		Fringe Benefit Payments						Irrevocable Fund		Total PWR	Overtime Rate
			H&W	Pension	App Tr.	Vac.	Annuity	Other	LECET (*)	MISC (*)		
Classification												
Sheet Metal Worker	$39.05		$9.03	$14.71	$1.61	$0.00	$0.00	$1.45	$0.00	$0.00	$65.85	$85.38
Apprentice	BHR	Percent										
1st Year	$21.48	$55.00	$9.03	$6.13	$1.61	$0.00	$0.00	$1.10	$0.00	$0.00	$39.35	$50.09
2nd Year	$23.43	$60.00	$9.03	$7.56	$1.61	$0.00	$0.00	$1.10	$0.00	$0.00	$42.73	$54.44
3rd Year	$26.16	$67.00	$9.03	$8.97	$1.61	$0.00	$0.00	$1.10	$0.00	$0.00	$46.87	$59.95
4th Year	$28.12	$72.00	$9.03	$10.22	$1.61	$0.00	$0.00	$1.10	$0.00	$0.00	$50.08	$64.14

(*)Special Calculation Note :

OTHER: Supplemental Unemployment Benefits

Ratio :

1 Journeymen to 1 Apprentice
4 Journeymen to 2 Apprentices
7 Journeymen to 3 Apprentices
10 Journeymen to 4 Apprentices
3 Journeymen to 1 Apprentice Thereafter

Jurisdiction (* denotes special jurisdictional note) :

Brown, Clermont, Hamilton, Highland

Special Jurisdictional Note :

Details :

Prevailing Wage Rate
Skilled Crafts

Name of Union: Sprinkler Fitter Local 669

Type of Rate: Commercial

Change #: LCR01-2025ib

Craft: Sprinkler Fitter

Effective Date: 8/6/2025

Effective Date: 8/6/2025

	BHR		Fringe Benefit Payments						Irrevocable Fund		Total PWR	Overtime Rate
			H&W	Pension	App Tr.	Vac.	Annuity	Other	LECET (*)	MISC (*)		
Classification												
Sprinkler Fitter	$48.28		$12.40	$7.40	$0.54	$0.00	$7.74	$0.00	$0.00	$0.00	$76.36	$100.50
Apprentice	BHR	Percent										
CLASS 1	$24.14	$50.00	$9.03	$0.00	$0.54	$0.00	$0.00	$0.00	$0.00	$0.00	$33.71	$45.78
CLASS 2	$27.04	$56.00	$9.03	$0.00	$0.54	$0.00	$0.00	$0.00	$0.00	$0.00	$36.61	$50.13
CLASS 3	$29.45	$61.00	$12.40	$7.40	$0.54	$0.00	$1.15	$0.00	$0.00	$0.00	$50.94	$65.66
CLASS 4	$31.38	$65.00	$12.40	$7.40	$0.54	$0.00	$1.15	$0.00	$0.00	$0.00	$52.87	$68.56
CLASS 5	$33.31	$69.00	$12.40	$7.40	$0.54	$0.00	$1.40	$0.00	$0.00	$0.00	$55.05	$71.70
CLASS 6	$36.21	$75.00	$12.40	$7.40	$0.54	$0.00	$1.40	$0.00	$0.00	$0.00	$57.95	$76.05
CLASS 7	$38.14	$79.00	$12.40	$7.40	$0.54	$0.00	$1.40	$0.00	$0.00	$0.00	$59.88	$78.95
CLASS 8	$40.56	$84.00	$12.40	$7.40	$0.54	$0.00	$1.40	$0.00	$0.00	$0.00	$62.30	$82.58
CLASS 9	$42.97	$89.00	$12.40	$7.40	$0.54	$0.00	$1.40	$0.00	$0.00	$0.00	$64.71	$86.19
CLASS 10	$44.90	$93.00	$12.40	$7.40	$0.54	$0.00	$1.40	$0.00	$0.00	$0.00	$66.64	$89.09

(*)Special Calculation Note :

Ratio :

1 Journeyman to 1 Apprentice

Jurisdiction (* denotes special jurisdictional note) :

Adams, Allen, Ashland, Ashtabula, Athens, Auglaize, Belmont, Brown, Butler, Carroll, Champaign, Clark, Clermont, Clinton, Columbiana, Coshocton, Crawford, Darke, Defiance, Delaware, Erie, Fairfield, Fayette, Franklin, Fulton, Gallia, Greene, Guernsey, Hamilton, Hancock, Hardin, Harrison, Henry, Highland, Hocking, Holmes, Huron, Jackson, Jefferson, Knox, Lawrence, Licking, Logan, Lucas, Madison, Mahoning, Marion, Medina, Meigs, Mercer, Miami, Monroe, Montgomery, Morgan, Morrow, Muskingum, Noble, Ottawa, Paulding, Perry, Pickaway, Pike, Portage, Preble, Putnam, Richland, Ross, Sandusky, Scioto, Seneca, Shelby, Stark, Summit, Trumbull, Tuscarawas, Union, Van Wert, Vinton, Warren, Washington, Wayne, Williams, Wood, Wyandot

Special Jurisdictional Note :

Details :

Sprinkler Fitter work shall consist of the installation, dismantling, maintenance, repairs, adjustments, and corrections of all fire protection and fire control systems including the unloading, handling by hand, power equipment and installation of all piping or tubing, appurtenances and equipment pertaining thereto, including both overhead and underground water mains, fire hydrants and hydrant mains, standpipes and hose connections to sprinkler systems used in connection with sprinkler and alarm systems. Also all tanks and pumps connected thereto, also included shall be CO-2 and Cardox Systems, Dry Chemical Systems, Foam Systems and all other fire protection systems.

Prevailing Wage Rate
Skilled Crafts

Name of Union: Truck Driver Locals 20,40,92,100,175,284,348,377,637,697,908,957 - Bldg & HevHwy Class 1

Type of Rate: Commercial

Change #: LCN01-2026ib

Craft: Truck Driver

Effective Date: 5/1/2026

Effective Date: 5/1/2026

	BHR		Fringe Benefit Payments						Irrevocable Fund		Total PWR	Overtime Rate
			H&W	Pension	App Tr.	Vac.	Annuity	Other	LECET (*)	MISC (*)		
Classification												
Truck Driver CLASS 1	$34.90		$10.75	$9.60	$0.50	$0.00	$0.00	$0.00	$0.00	$0.00	$55.75	$73.20
Apprentice	BHR	Percent										
First 6 months	$27.92	$80.00	$10.75	$9.60	$0.50	$0.00	$0.00	$0.00	$0.00	$0.00	$48.77	$62.73
7-12 months	$29.67	$85.02	$10.75	$9.60	$0.50	$0.00	$0.00	$0.00	$0.00	$0.00	$50.52	$65.36
13-18 months	$31.41	$90.00	$10.75	$9.60	$0.50	$0.00	$0.00	$0.00	$0.00	$0.00	$52.26	$67.97
19-24 months	$33.16	$95.02	$10.75	$9.60	$0.50	$0.00	$0.00	$0.00	$0.00	$0.00	$54.01	$70.59
25-30 months	$34.90	$100.00	$10.75	$9.60	$0.50	$0.00	$0.00	$0.00	$0.00	$0.00	$55.75	$73.20

(*)Special Calculation Note :

Ratio :

3 Journeymen to 1 Apprentice

Jurisdiction (* denotes special jurisdictional note) :

Adams, Allen, Ashland, Ashtabula, Athens, Auglaize, Belmont, Brown, Butler, Carroll, Champaign, Clark, Clermont, Clinton, Columbiana, Coshocton, Crawford, Darke, Defiance, Delaware, Erie, Fairfield, Fayette, Franklin, Fulton, Gallia, Greene, Guernsey, Hamilton, Hancock, Hardin, Harrison, Henry, Highland, Hocking, Holmes, Huron, Jackson, Jefferson, Knox, Lawrence, Licking, Logan, Lorain, Lucas, Madison, Mahoning, Marion, Medina, Meigs, Mercer, Miami, Monroe, Montgomery, Morgan, Morrow, Muskingum, Noble, Ottawa, Paulding, Perry, Pickaway, Pike, Portage, Preble, Putnam, Richland, Ross, Sandusky, Scioto, Seneca, Shelby, Stark, Summit, Trumbull, Tuscarawas, Union, Van Wert, Vinton, Warren, Washington, Wayne, Williams, Wood, Wyandot

Special Jurisdictional Note :

Details :

CLASS 1: Drivers on trucks, including but not limited to: 4-wheel service trucks; 4-wheel dump trucks; batch trucks; drivers on tandems; truck sweepers (not to include power sweepers and scrubbers) Drivers on tractor – trailer combinations including but not limited to the following: Semi-tractor trucks; pole trailers; ready-mix trucks; fuel trucks; all trucks five (5) axle and over; drivers on belly dumps; truck mechanics (when needed).

Prevailing Wage Rate
Skilled Crafts

Name of Union: Truck Driver Locals 20,40,92,100,175,284,348,377,637,697,908,957 - Bldg & HevHwy Class 2

Type of Rate: Commercial

Change #: LCN01-2026ib

Craft: Truck Driver

Effective Date: 5/1/2026

Effective Date: 5/1/2026

	BHR		Fringe Benefit Payments						Irrevocable Fund		Total PWR	Overtime Rate
			H&W	Pension	App Tr.	Vac.	Annuity	Other	LECET (*)	MISC (*)		
Classification												
Truck Driver CLASS 2	$35.91		$10.75	$9.60	$0.50	$0.00	$0.00	$0.00	$0.00	$0.00	$56.76	$74.72
Apprentice	BHR	Percent										
First 6 months	$28.72	$79.99	$10.75	$9.60	$0.50	$0.00	$0.00	$0.00	$0.00	$0.00	$49.57	$63.93
7-12 months	$30.52	$85.00	$10.75	$9.60	$0.50	$0.00	$0.00	$0.00	$0.00	$0.00	$51.37	$66.63
13-18 months	$32.32	$90.00	$10.75	$9.60	$0.50	$0.00	$0.00	$0.00	$0.00	$0.00	$53.17	$69.33
19-24 months	$34.11	$95.00	$10.75	$9.60	$0.50	$0.00	$0.00	$0.00	$0.00	$0.00	$54.96	$72.02
25-30 months	$35.91	$100.00	$10.75	$9.60	$0.50	$0.00	$0.00	$0.00	$0.00	$0.00	$56.76	$74.72

(*)Special Calculation Note :

Ratio :

3 Journeymen to 1 Apprentice

Jurisdiction (* denotes special jurisdictional note) :

Adams, Allen, Ashland, Ashtabula, Athens, Auglaize, Belmont, Brown, Butler, Carroll, Champaign, Clark, Clermont, Clinton, Columbiana, Coshocton, Crawford, Darke, Defiance, Delaware, Erie, Fairfield, Fayette, Franklin, Fulton, Gallia, Greene, Guernsey, Hamilton, Hancock, Hardin, Harrison, Henry, Highland, Hocking, Holmes, Huron, Jackson, Jefferson, Knox, Lawrence, Licking, Logan, Lorain, Lucas, Madison, Mahoning, Marion, Medina, Meigs, Mercer, Miami, Monroe, Montgomery, Morgan, Morrow, Muskingum, Noble, Ottawa, Paulding, Perry, Pickaway, Pike, Portage, Preble, Putnam, Richland, Ross, Sandusky, Scioto, Seneca, Shelby, Stark, Summit, Trumbull, Tuscarawas, Union, Van Wert, Vinton, Warren, Washington, Wayne, Williams, Wood, Wyandot

Special Jurisdictional Note :

Details :

CLASS 2: Drivers on articulated dump trucks; rigid-frame rock trucks; distributor trucks; low boys/drag driver on the construction site only and heavy duty equipment (irrespective of load carried) when used exclusively for transportation on the construction site only.

SECTION 005000

AGREEMENT FORM

1. The Contract Form for this project will be AIA A132-2019 .

END OF SECTION

AIA® Document A132® – 2019 (Amended and Modified)

Standard Form of Agreement Between Owner and Contractor, *Construction Manager as Adviser Edition*

AGREEMENT made as of the ____ day of _____ in the year 2026
(In words, indicate day, month, and year.)

BETWEEN the Owner:
(Name, legal status, address, and other information)

Board of County Commissioners, Hamilton County, Ohio
603 County Administration Building
138 East Court Street
Cincinnati, Ohio 45202

and the Contractor:
(Name, legal status, address, and other information)

for the following Project:
(Name, location, and detailed description)

Hamilton County Paycor Stadium
ITB #078-26
South Scoreboard Facade
1 Paycor Stadium
Cincinnati, Ohio 45202

The Construction Manager:
(Name, legal status, address, and other information)

Messer Construction Co.
643 West Court Street
Cincinnati, Ohio 45203

The Architect:
(Name, legal status, address, and other information)

KZF Design, Inc.
700 Broadway
Cincinnati, Ohio 45202

The Owner and Contractor agree as follows.

ADDITIONS AND DELETIONS: The author of this document may have revised the text of the original AIA standard form. An *Additions and Deletions Report* that notes revisions to the standard form text is available from the author and should be reviewed. A vertical line in the left margin of this document indicates where the author has added to or deleted from the original AIA text.

This document has important legal consequences. Consultation with an attorney is encouraged with respect to its completion or modification.

This document is intended to be used in conjunction with AIA Documents A232™–2019, General Conditions of the Contract for Construction, Construction Manager as Adviser Edition; B132™–2019, Standard Form of Agreement Between Owner and Architect, Construction Manager as Adviser Edition; and C132™–2019, Standard Form of Agreement Between Owner and Construction Manager as Adviser.

AIA Document A232™–2019 is adopted in this document by reference. Do not use with other general conditions unless this document is modified.

ELECTRONIC COPYING of any portion of this AIA® Document to another electronic file is prohibited and constitutes a violation of copyright laws as set forth in the footer of this document.

AIA Document A132 – 2019. Copyright © 1975, 1980, 1992, 2009, and 2019. All rights reserved. "The American Institute of Architects," "American Institute of Architects," "AIA," the AIA Logo, and "AIA Contract Documents" are trademarks of The American Institute of Architects. This draft was produced at 15:01:02 EDT on 06/26/2025 under Subscription No.20250121573 which expires on 04/23/2026, is not for resale, is licensed for one-time use only, and may only be used in accordance with the AIA Contract Documents® Terms of Service. To report copyright violations, e-mail docinfo@aiacontracts.com.
User Notes: (685c3c727c33a690e20fcb11)

TABLE OF ARTICLES

1 THE CONTRACT DOCUMENTS

2 THE WORK OF THIS CONTRACT

3 DATE OF COMMENCEMENT AND DATES OF SUBSTANTIAL COMPLETION

4 CONTRACT SUM

5 PAYMENTS

6 DISPUTE RESOLUTION

7 TERMINATION OR SUSPENSION

8 MISCELLANEOUS PROVISIONS

9 ENUMERATION OF CONTRACT DOCUMENTS

ARTICLE 1 THE CONTRACT DOCUMENTS

The Contract Documents consist of this Agreement, Conditions of the Contract (General, Supplementary, and other Conditions, including the General Conditions of the Contract for Construction, AIA A232-2019, as modified and attached hereto), Drawings, Specifications, Addenda issued prior to execution of this Agreement, the Contractor's Construction Schedule (as defined in Paragraph 3.10 of the General Conditions and as modified from time to time), the Schedule of Values (as defined in Paragraph 9.2 of the General Conditions and as modified from time to time), the Project Schedule (as defined in Paragraph 3.10 of the General Conditions and as modified from time to time), and other documents listed in this Agreement, and Modifications issued after execution of this Agreement, all of which form the Contract, and are as fully a part of the Contract as if attached to this Agreement or repeated herein. The Contract represents the entire and integrated agreement between the parties hereto and supersedes prior negotiations, representations, or agreements, either written or oral. An enumeration of the Contract Documents, other than Modifications, appears in Article 9. All references in this Agreement to the AIA A232-2019 shall be to the AIA A232-2019 as modified and attached hereto. In the event of a conflict or inconsistency in or among the Contract Documents, the Contractor shall, unless directed otherwise in writing by the Owner, provide the greatest quantity, highest quality, highest degree of safety, and most stringent material, equipment or Work.

ARTICLE 2 THE WORK OF THIS CONTRACT

§ 2.1 The Contractor shall fully execute the Work described in the Contract Documents, except as specifically indicated in the Contract Documents to be the responsibility of others.

§ 2.2 Contractor's Work shall include all construction services necessary to result in the timely and proper construction of the completed Project in accordance with the Contract Documents.

§ 2.3 The Work includes all items that would be reasonably inferable from the Contract Documents by contractors in similar situations as necessary to produce the results intended; provided, however, if it appears that any reasonable inferences would conflict with the Drawings and Specifications, then Contractor shall obtain direction before proceeding with such Work.

§ 2.4 Contractor accepts the relationship of trust and confidence established by this Agreement and covenants with the Owner to cooperate with the Architect and Construction Manager and exercise the Contractor's skill and judgment in furthering the interests of the Owner; to furnish efficient business administration and supervision; to furnish at all times an adequate supply of workers and materials; and to perform the Work in an expeditious and economical manner consistent with the Owner's interests. The Contractor shall furnish only skilled and properly trained and qualified personnel for the performance of the Work. Notwithstanding the foregoing, it is hereby acknowledged that the Contractor is an independent contractor and is not an employee, joint venturer, or agent of the Owner.

AIA Document A132 – 2019. Copyright © 1975, 1980, 1992, 2009, and 2019. All rights reserved. "The American Institute of Architects," "American Institute of Architects," "AIA," the AIA Logo, and "AIA Contract Documents" are trademarks of The American Institute of Architects. This draft was produced at 15:01:02 EDT on 06/26/2025 under Subscription No.20250121573 which expires on 04/23/2026, is not for resale, is licensed for one-time use only, and may only be used in accordance with the AIA Contract Documents® Terms of Service. To report copyright violations, e-mail docinfo@aiacontracts.com.
User Notes: (685c3c727c33a690e20fcb11)

§ 2.5 The Contractor shall perform and complete its obligations under this Contract through the exercise of care, diligence and skill expected of a contractor (i) that is experienced and skilled in construction of the quality, complexity, size, nature, site and location comparable to the Project, and (ii) that is highly familiar with (a) the site upon which the Project is to be constructed and (b) local conditions under which the Work is to be performed (such care, diligence, and skill is the "Standard of Care").

ARTICLE 3 DATE OF COMMENCEMENT AND DATES OF SUBSTANTIAL COMPLETION

§ 3.1 The date of commencement of the Work shall be:
(Check one of the following boxes.)

[ ] The date of this Agreement.

[ ] A date set forth in a notice to proceed issued by the Owner.

[ ] Established as follows:
(Insert a date or a means to determine the date of commencement of the Work.)

If a date of commencement of the Work is not selected, then the date of commencement shall be the date of this Agreement.

§ 3.2 The Contract Time shall be measured from the date of commencement of the Work.

§ 3.3 Omitted

§ 3.4 When the Work of this Contract, or any Portion Thereof, is Substantially Complete

§ 3.4.1 Subject to adjustments of the Contract Time as provided in the Contract Documents, the Contractor shall substantially complete the entire Work of this Contract:
(Check one of the following boxes and complete the necessary information.)

[ ] Not later than ( ) calendar days from the date of commencement of the Work.

[ ] By the following dates:

Final Completion of the Work shall be achieved not later than thirty (30) days after the date of Substantial Completion ("Final Completion Date"). Final Completion is the stage of the Project where the Work has been completed in its entirety, including but not limited to achieving Substantial Completion, completing the Punchlist, issuance of the Architect's final Certificate for Payment, and completing all obligations and conditions in **§ 9.10** of the General Conditions.

§ 3.4.2 Subject to adjustments of the Contract Time as provided in the Contract Documents, if portions of the Work of this Contract are to be substantially complete prior to when the entire Work of this Contract shall be substantially complete, the Contractor shall substantially complete such portions by the following dates:

Portion of Work	Date to be substantially complete

§ 3.4.3 If the Contractor fails to substantially complete the Work of this Contract, or portions thereof, as provided in this Section 3.4, damages shall be assessed as set forth in Section 4.5.

§ 3.5 Time is of the essence to the Contract Documents and all obligations thereunder. The Contractor acknowledges and recognizes that the Owner is entitled to full and beneficial occupancy and use of the completed Work as of Substantial Completion.

§ 3.6 The Contractor shall adhere strictly to its most recent Construction Schedule approved by Owner, Construction

AIA Document A132 – 2019. Copyright © 1975, 1980, 1992, 2009, and 2019. All rights reserved. "The American Institute of Architects," "American Institute of Architects," "AIA," the AIA Logo, and "AIA Contract Documents" are trademarks of The American Institute of Architects. This draft was produced at 15:01:02 EDT on 06/26/2025 under Subscription No.20250121573 which expires on 04/23/2026, is not for resale, is licensed for one-time use only, and may only be used in accordance with the AIA Contract Documents® Terms of Service. To report copyright violations, e-mail docinfo@aiacontracts.com.
User Notes: (685c3c727c33a690e20fcb11)

DRAFT

Manager and Architect for its Work and incorporated into the Project Schedule. Contractor shall prosecute its Work promptly and diligently in accordance with the Project Schedule approved by the Owner, Construction Manager and Architect, as said Project Schedule may be revised or modified from time to time by written approval of Owner. If, in the reasonable judgment of the Construction Manager, the Contractor fails to perform its Work promptly and diligently as required by the Project Schedule, as revised, then the Construction Manager may require the Contractor to promptly furnish a "Recovery Plan" to demonstrate the manner and time period of recovery in which the Contractor shall promptly restore the progress and completion of the Work in compliance with that required by the Contract Documents, including the Project Schedule. Such Recovery Plan shall be received by Construction Manager within seventy-two (72) hours of Contractor's receipt of notice from Construction Manager. If the Construction Manager does not receive the Recovery Plan in a timely manner or is not satisfied with the Recovery Plan, the Construction Manager shall have the right, but not the obligation, to direct the Contractor to accelerate the Work as necessary to achieve the progress and completion of the Work to the reasonable satisfaction of the Construction Manager. Any acceleration required under this Section shall be performed without adjustment to the Contract Sum; provided, however, if the Construction Manager requires an acceleration due to causes that would otherwise entitle the Contractor to an equitable adjustment in the Contract Time per **§8.3** of the General Conditions, then the Contract Sum shall be equitably adjusted, pursuant to a Change Order. If the Contractor fails to accelerate the Work adequately following a demand by the Construction Manager, to do so pursuant to this Section, and after having provided the Contractor written notice and a reasonable opportunity to cure of not less than two (2) days, and without waiving any other rights or remedies, then the Owner (i) shall have the right, but not the obligation, to take appropriate action to accelerate the Work, with its own forces or through separate contractors, and (ii) may deduct from any payment due the Contractor, amounts as reasonably necessary to cover the costs associated with such acceleration.

§ 3.7 Whenever acceleration is required by the Owner or Construction Manager under any provisions of the Contract Documents, the Contractor shall determine how best to accelerate performance of the Work and comply with all other obligations of Contractor under the Contract Documents. The Contractor may consider, among other methods of acceleration, providing additional labor, expediting deliveries of materials, performing overtime or re-sequencing the Work. Notwithstanding the Owner's or Construction Manager's exercise of any of its rights to accelerate the Work pursuant to the Contract Documents, in no event shall the Owner or Construction Manager be deemed to have any control over, charge of, or any responsibility for construction means, methods, techniques, sequences, or procedures or for safety precautions and programs in connection with the Work.

§ 3.8 The Contractor acknowledges and recognizes that the Owner is entitled to full and beneficial occupancy and use of the completed Work following expiration of the Substantial Completion Date, subject to the terms and conditions of the Contract Documents.

§ 3.9 If Contractor does not accomplish Final Completion by the Final Completion Date, Owner may thereafter engage other contractors to complete the remaining Work. Owner may deduct its resulting costs and expenses from amounts otherwise payable to Contractor, and Contractor shall reimburse Owner for any expenses that Owner does not deduct within ten (10) days after demand.

§ 3.10 Contractor shall (1) assist the Architect and Construction Manager in determining when the Work or a designated portion or phase thereof has reached Substantial Completion and prepare for the Architect, Construction Manager and Owner a punch list of incomplete or unsatisfactory items and a schedule for their completion; (2) assist the Architect, Construction Manager and Owner in conducting inspections; (3) after the Architect and Construction Manager certify the date of Substantial Completion of the Work, coordinate the correction and final completion of such Work; and (4) when the Work is finally completed, provide written notice and certification to the Owner, Construction Manager and the Architect that the Work is completed and ready for final inspection and acceptance, and on Final Completion, secure and transmit to the Owner all required warranties, guarantees, affidavits, releases, bonds and waivers and turn over to the Owner all keys to the Project in its possession.

ARTICLE 4 CONTRACT SUM

§ 4.1 The Owner shall pay the Contractor the Contract Sum in current funds for the Contractor's performance of the Contract. The Contract Sum shall be a Stipulated Sum, in accordance with Section 4.2 below

§ 4.2 Stipulated Sum

§ 4.2.1 The Contract Sum for (**$**), subject to additions and deductions as provided in the Contract Documents. **In recognition of the Owner's Owner-Controlled Insurance Program (OCIP) providing General Liability and Excess Liability insurance, as more fully described in the OCIP Manual, the Contractor warrants**

AIA Document A132 – 2019. Copyright © 1975, 1980, 1992, 2009, and 2019. All rights reserved. "The American Institute of Architects," "American Institute of Architects," "AIA," the AIA Logo, and "AIA Contract Documents" are trademarks of The American Institute of Architects. This draft was produced at 15:01:02 EDT on 06/26/2025 under Subscription No.20250121573 which expires on 04/23/2026, is not for resale, is licensed for one-time use only, and may only be used in accordance with the AIA Contract Documents® Terms of Service. To report copyright violations, e-mail docinfo@aiacontracts.com.
User Notes: (685c3c727c33a690e20fcb11)

that the Contract Sum does not include any fees or expenses for Contractor and Subcontractors of any tier for General Liability and Excess Liability insurance for on-site exposures on the Project.

§ 4.2.2 Alternates

§ 4.2.2.1 Alternates, if any, accepted by Owner and included in the Contract Sum:

Item	Price

§ 4.2.2.2 Subject to the conditions noted below, the following alternates may be accepted by the Owner following execution of this Agreement. Upon acceptance, the Owner shall issue a Modification to this Agreement.
(Insert below each alternate and the conditions that must be met for the Owner to accept the alternate.)

Item	Price	Conditions for Acceptance

§ 4.2.3 Allowances, if any, included in the Contract Sum:
(Identify each allowance.)

Item	Price

The Allowance shall be used as directed by the Owner. The unused portion of the Allowance shall be credited to the Owner via a deduct Change Order at Project completion.

§ 4.2.4 Unit prices, if any:

Item	Units	Price per Unit ($0.00)

§ 4.2.4.1 Where the Work involved is covered by unit prices contained in the Contract Documents, the value of any Work covered by a Change Order or Claim for an adjustment in the Contract Sum will be determined by application of such unit prices to the actual quantities of each scheduled item.

§ 4.2.4.2 The Construction Manager will determine the actual quantities and classifications of Unit Price Work performed by the Contractor. The Construction Manager will review with Contractor the Construction Manager's preliminary determinations on such matters before rendering a written decision thereon (by recommendation of an Application for Payment or otherwise). The Construction Manager's written decision thereon will be final and binding (except as modified by the Construction Manager to reflect changed factual conditions or more accurate data) upon Owner and Contractor.

§ 4.2.4.3 Each unit price will be deemed to include an amount considered by the Contractor to be adequate to cover the Contractor's overhead and profit for each separately identified item.

DRAFT

AIA Document A132 – 2019. Copyright © 1975, 1980, 1992, 2009, and 2019. All rights reserved. "The American Institute of Architects," "American Institute of Architects," "AIA," the AIA Logo, and "AIA Contract Documents" are trademarks of The American Institute of Architects. This draft was produced at 15:01:02 EDT on 06/26/2025 under Subscription No.20250121573 which expires on 04/23/2026, is not for resale, is licensed for one-time use only, and may only be used in accordance with the AIA Contract Documents® Terms of Service. To report copyright violations, e-mail docinfo@aiacontracts.com.
User Notes: (685c3c727c33a690e20fcb11)

§ 4.3 Omitted

§ 4.4 Omitted

§ 4.5 Liquidated Damages, if any

§ 4.6 Other

(Insert provisions for bonus, cost savings or other incentives, if any, that might result in a change to the Contract Sum.)

ARTICLE 5 PAYMENTS

§ 5.1 Progress Payments

§ 5.1.1 Based upon complete Applications for Payment submitted to the Construction Manager and Owner by the Contractor in accordance with the requirements set forth herein, and Certificates for Payment issued by the Construction Manager and Architect, the Owner shall make progress payments of approved amounts on account of the Contract Sum, to the Contractor, as provided below and elsewhere in the Contract Documents.

§ 5.1.2 The period covered by each Application for Payment shall be one calendar month ending on the last day of the month.

§ 5.1.3 Provided that an Application for Payment and all required supporting documentation are received by the Construction Manager not later than the 5th day of a month, the Owner shall make payment of the amount certified to the Contractor not later than the 5th day of the following month. If an Application for Payment is received by the Construction Manager after the application date fixed above, payment of the amount certified shall be made by the Owner not later than thirty (30) days after the Construction Manager receives the Application for Payment.

§ 5.1.4 Progress Payments Where the Contract Sum is Based on a Stipulated Sum

§ 5.1.4.1 Each Application for Payment shall be based on the most recent Schedule of Values submitted by the Contractor and approved by the Owner in accordance with the Contract Documents. The Schedule of Values shall allocate the entire Contract Sum among the various portions of the Work. The Schedule of Values shall be prepared in such form, and supported by such data to substantiate its accuracy, as the Construction Manager and Architect may require. This Schedule of Values, unless objected to by the Construction Manager, Architect or Owner, shall be used as a basis for reviewing the Contractor's Applications for Payment.

§ 5.1.4.2 Applications for Payment shall show the percentage of completion of each portion of the Work as of the end of the period covered by the Application for Payment.

§ 5.1.4.3 In accordance with the General Conditions, and subject to other provisions of the Contract Documents, the amount of each progress payment shall be computed as follows:

§ 5.1.4.3.1 The amount of each progress payment shall first include:

- **.1** That portion of the Contract Sum properly allocable to completed Work;
- **.2** That portion of the Contract Sum properly allocable to materials and equipment delivered and suitably stored at the site for subsequent incorporation in the completed construction, or, if approved in writing in advance by the Owner, suitably stored off the site at a location agreed upon in writing; and
- **.3** That portion of Construction Change Directives that the Architect determines, in the Architect's professional judgment, to be reasonably justified.

§ 5.1.4.3.2 The amount of each progress payment shall then be reduced by:

- **.1** The aggregate of any amounts previously paid by the Owner;
- **.2** The amount, if any, for Work that remains uncorrected and for which the Architect has previously withheld a Certificate for Payment as provided in Article 9 of the General Conditions;

AIA Document A132 – 2019. Copyright © 1975, 1980, 1992, 2009, and 2019. All rights reserved. "The American Institute of Architects," "American Institute of Architects," "AIA," the AIA Logo, and "AIA Contract Documents" are trademarks of The American Institute of Architects. This draft was produced at 15:01:02 EDT on 06/26/2025 under Subscription No.20250121573 which expires on 04/23/2026, is not for resale, is licensed for one-time use only, and may only be used in accordance with the AIA Contract Documents® Terms of Service. To report copyright violations, e-mail docinfo@aiacontracts.com.
User Notes: (685c3c727c33a690e20fcb11)

.3 Any amount for which the Contractor does not intend to pay a Subcontractor or material supplier, unless the Work has been performed by others the Contractor intends to pay;

.4 For Work performed or defects discovered since the last payment application, any amount for which the Architect may withhold payment, or nullify a Certificate of Payment in whole or in part, as provided in Article 9 of the General Conditions; and

.5 Retainage withheld pursuant to Section 5.1.7.

§ 5.1.5 Omitted

§ 5.1.6 Omitted

§ 5.1.7 Retainage

§ 5.1.7.1 For each progress payment made prior to when the Work of this Contract is substantially complete, the Owner may withhold the following amount, as retainage, from the payment otherwise due:

«**.1** For labor performed prior to Substantial Completion of the Work, the progress payment shall be reduced by four percent (4%) and made at the rate of ninety-six percent (96%) of the Schedule of Values prepared by the Contractor and approved by the Architect and Construction Manager and

.2 Provided the materials have been inspected and found to meet the specifications, the progress payment for materials delivered to and suitably stored at the Project site shall be reduced by eight percent (8%) and made at the rate of ninety-two percent (92%) of the Schedule of Values prepared by the Contractor and approved by the Architect and Construction Manager. The retained balance shall be paid when such material is incorporated into and becomes a part of the Project.

§ 5.1.7.1.1 The following items are not subject to retainage:
(Insert any items not subject to the withholding of retainage, such as general conditions, insurance, etc.)

N/A

§ 5.1.7.2 Reduction or limitation of retainage, if any, shall be as follows:
(If the retainage established in Section 5.1.7.1 is to be modified prior to when the entire Work of this Contract is substantially complete, including modifications for completion of portions of the Work as provided in Section 3.4.2, insert provisions for such modifications.)

§ 5.1.7.3 Except as set forth in this Section 5.1.7.3, when the Work of this Contract is substantially complete, the Contractor may submit an Application for Payment that includes the retainage withheld from prior Applications for Payment pursuant to this Section 5.1.7. The Application for Payment submitted when the Work of this Contract is substantially complete shall not include retainage as follows:
(Insert any other conditions for release of retainage when the Work of this Contract is substantially complete, or upon Substantial Completion of the Work of all Contractors on the Project or portions thereof.)

§ 5.2 Final Payment

§ 5.2.1 Final Payment Where the Contract Sum is Based on a Stipulated Sum

§ 5.2.1.1 Final payment, constituting the entire unpaid balance of the Contract Sum, shall be made by the Owner to the Contractor when

.1 the Contractor has fully performed the Contract except for the Contractor's responsibility to correct Work as provided in Article 12 of the General Conditions, and to satisfy other requirements, if any, which extend beyond final payment; and

.2 a final Certificate for Payment or Project Certificate for Payment has been issued by the Architect.

§ 5.2.1.2 The Owner's final payment to the Contractor shall be made no later than 30 days after the issuance of the Architect's final Certificate for Payment.

AIA Document A132 – 2019. Copyright © 1975, 1980, 1992, 2009, and 2019. All rights reserved. "The American Institute of Architects," "American Institute of Architects," "AIA," the AIA Logo, and "AIA Contract Documents" are trademarks of The American Institute of Architects. This draft was produced at 15:01:02 EDT on 06/26/2025 under Subscription No.20250121573 which expires on 04/23/2026, is not for resale, is licensed for one-time use only, and may only be used in accordance with the AIA Contract Documents® Terms of Service. To report copyright violations, e-mail docinfo@aiacontracts.com.
User Notes: (685c3c727c33a690e20fcb11)

§ 5.2.2 Omitted

§ 5.3 Payments due and unpaid under the Contract shall bear interest from the date payment is due at the rate stated below.
(Insert rate of interest agreed upon, if any.)

0.00 %

ARTICLE 6 DISPUTE RESOLUTION
§ 6.1 Initial Decision Maker
The Architect will serve as Initial Decision Maker pursuant to Article 15 of the General Conditions.

§ 6.2 Dispute Resolution
For any Claim subject to, but not resolved by, mediation pursuant to Article 15 of the General Conditions, either party may commence litigation in a court of competent jurisdiction in Hamilton County, Ohio.

ARTICLE 7 TERMINATION OR SUSPENSION
§ 7.1 Where the Contract Sum is a Stipulated Sum
§ 7.1.1 The Contract may be terminated by the Owner or the Contractor as provided in Article 14 of the General Conditions.

§ 7.1.1.1 If the Contract is terminated for the Owner's convenience in accordance with Article 14 of the General Conditions, then the Owner shall pay the Contractor as follows:

The Contractor shall be entitled to receive payment for the direct costs of the Work properly executed; direct and actual reasonable costs incurred by reason of the termination, including direct costs attributable to termination of Subcontracts.

§ 7.1.2 The Work may be suspended by the Owner as provided in Article 14 of the General Conditions.

§ 7.2 Omitted

§ 7.3 Suspension
The Work may be suspended by the Owner as provided in Article 14 of the General Conditions; in such case, and only if such suspension was not caused by the Contractor or its subcontractors, suppliers, laborers or vendors, the Contract Sum and Contract Time shall be increased as provided in Article 14 of the General Conditions.

ARTICLE 8 MISCELLANEOUS PROVISIONS
§ 8.1 Where reference is made in this Agreement to a provision of the General Conditions or another Contract Document, the reference refers to that provision as amended or supplemented by other provisions of the Contract Documents.

§ 8.2 The Owner's representative:

Joe Paul
Director of Stadia and Parking
3 Paycor Stadium
Cincinnati, Ohio 45202

§ 8.3 The Contractor's representative:

DRAFT

AIA Document A132 – 2019. Copyright © 1975, 1980, 1992, 2009, and 2019. All rights reserved. "The American Institute of Architects," "American Institute of Architects," "AIA," the AIA Logo, and "AIA Contract Documents" are trademarks of The American Institute of Architects. This draft was produced at 15:01:02 EDT on 06/26/2025 under Subscription No.20250121573 which expires on 04/23/2026, is not for resale, is licensed for one-time use only, and may only be used in accordance with the AIA Contract Documents® Terms of Service. To report copyright violations, e-mail docinfo@aiacontracts.com.
User Notes: (685c3c727c33a690e20fcb11)

§ 8.4 Neither the Owner's nor the Contractor's representative shall be changed without ten days' prior notice to the other party.

§ 8.5 Insurance and Bonds

§ 8.5.1 The Owner and the Contractor shall purchase and maintain insurance as set forth in the General Conditions and the OCIP.

§ 8.5.2 The Contractor shall provide bonds as set forth in the General Conditions and elsewhere in the Contract Documents.

§ 8.6 Notice in electronic format, pursuant to Article 1 of the General Conditions, may be given in accordance with a building information modeling exhibit, if completed, or as otherwise set forth below:
(If other than in accordance with a building information modeling exhibit, insert requirements for delivering notice in electronic format such as name, title, and email address of the recipient and whether and how the system will be required to generate a read receipt for the transmission.)

§ 8.7 Omitted

§ 8.8 Other provisions

§8.8.1 The Contractor must verify all materials, equipment and labor entering into the Work for conformance with the Contract Documents and must keep such full and detailed accounts as may be necessary for proper financial management under the Contract. The system and method of accounting is subject to Construction Manager's and Architect's approval. Architect, Construction Manager and Owner, and their agents and employees, will be afforded access to all the Contractor's records, books, correspondence, instructions, receipts, vouchers, memoranda, and similar data relating to the Contract, and the Contractor must preserve all such records and provide such access for a period of three (3) years after the date of Substantial Completion.

§8.8.2 The Contractor represents and warrants to the Owner the following (in addition to any other representations and warranties contained in the Contract Documents), as an inducement to the Owner to execute this Agreement, which representations and warranties shall survive the execution and delivery of this Agreement, any termination of this Agreement and the final completion of the Work:

.1 The Contractor is, and throughout the performance of the Work shall remain, financially solvent, able to pay all debts as they mature and possessed of sufficient working capital to complete the Work and perform all obligations hereunder;

.2 The Contractor can furnish the plant, tools, materials, supplies, equipment, services and labor required to complete the Work and perform its obligations hereunder and has sufficient experience and competence to do so;

.3 The Contractor is qualified to do business in the state of Ohio and is properly licensed by, and registered with, all necessary governmental, public and quasi-public authorities having jurisdiction over the Contractor, the performance of the Work and the Project; and

.4 Execution of this Agreement and performance thereof is within the duly authorized powers of the Contractor and all resolutions or other authorization necessary for the Contractor to enter into this Agreement and for the signatory to sign this Agreement on behalf of the Contractor have been duly obtained and are currently in full force and effect.

§8.8.3 To the extent any preconstruction or other services have been provided by the Contractor before the execution of this Agreement, the Owner and Contractor nevertheless agree that this Agreement shall control the rights and responsibilities of the parties hereto. For the avoidance of doubt, all payments made by the Owner to Contractor related to the Project prior to the execution of this Agreement shall be considered payments made under this Agreement.

§8.8.4 The provisions of this Agreement that by their nature extend beyond the termination of this Agreement will

AIA Document A132 – 2019. Copyright © 1975, 1980, 1992, 2009, and 2019. All rights reserved. "The American Institute of Architects," "American Institute of Architects," "AIA," the AIA Logo, and "AIA Contract Documents" are trademarks of The American Institute of Architects. This draft was produced at 15:01:02 EDT on 06/26/2025 under Subscription No.20250121573 which expires on 04/23/2026, is not for resale, is licensed for one-time use only, and may only be used in accordance with the AIA Contract Documents® Terms of Service. To report copyright violations, e-mail docinfo@aiacontracts.com.
User Notes: (685c3c727c33a690e20fcb11)

survive termination, completion or expiration of this Agreement.

§8.8.5 If any portion of this Agreement shall be found invalid for any reason, such portion shall be severed from this Agreement, and all remaining provisions shall remain in full force and effect.

§8.8.6 The parties expressly agree that this Agreement was jointly drafted, and they both had opportunity to negotiate its terms and to obtain the assistance of counsel in reviewing its terms prior to execution. Therefore, this Agreement shall be construed in a neutral manner.

§8.8.7 This Agreement may be executed in separate counterparts and delivered by facsimile or electronic scanned format, with the parties hereby acknowledging that each separately executed counterpart will be afforded the same force and effect as a duly signed original document, even if an executed counterpart is delivered only via facsimile copy or electronic scanned format. »

ARTICLE 9 ENUMERATION OF CONTRACT DOCUMENTS

§ 9.1 This Agreement is comprised of the following documents:

.1 This AIA Document A132™–2019, Standard Form of Agreement Between Owner and Contractor, Construction Manager as Adviser Edition, as modified and amended.

.2 AIA Document A232™–2019, General Conditions of the Contract for Construction, Construction Manager as Adviser Edition, as modified and amended ("General Conditions"), a copy of which is attached hereto.

.3 The following Drawings as may be revised and re-issued by the Architect:

Number	Title	Issue Date

.4 Specifications contained in the Project Manual and Addenda for the Project:

DRAFT

AIA Document A132 – 2019. Copyright © 1975, 1980, 1992, 2009, and 2019. All rights reserved. "The American Institute of Architects," "American Institute of Architects," "AIA," the AIA Logo, and "AIA Contract Documents" are trademarks of The American Institute of Architects. This draft was produced at 15:01:02 EDT on 06/26/2025 under Subscription No.20250121573 which expires on 04/23/2026, is not for resale, is licensed for one-time use only, and may only be used in accordance with the AIA Contract Documents® Terms of Service. To report copyright violations, e-mail docinfo@aiacontracts.com.
User Notes: (685c3c727c33a690e20fcb11)

.5 Addenda, if any:

Number	Date	Pages

Portions of Addenda relating to bidding or proposal requirements are not part of the Contract Documents unless the bidding or proposal requirements are also enumerated in this Article 9.

.6 Other documents listed below:

The following documents contained in the Project Manual for the Project:»

Number	Title	Pages
000125	Project Directory	1
001000.18	Tax Exempt Statement	1
	Affidavit of Compliance-Prevailing Wages	1
001000.23	Prevailing Wages	
007319	Health and Safety Requirements	10
007319A	Safety, Health and Environmental Requirements	35
008260	Minority, Women and Small Business Enterprise Program	28
008270	Responsible Bidder Requirements	4
	OCIP Manual, Version 2 dated March 18, 2026, as may be amended	24
009000	Contract Construction Management Forms (including Change Order Form AIA G701/CMa as amended and modified. Application and Certificate for Payment Form AIA G702/CMa as amended and modified. Continuation Sheet AIA G703CMa as amended and modified, Certificate of Substantial Completion Form AIA G704/CMa as amended and modified, Contractor's Affidavit of Payment of Debts and Claims Form AIA G706/CMa as amended and modified, Contractor's Affidavit of Release of Liens Form AIA G706A/CMa as amended	

AIA Document A132 – 2019. Copyright © 1975, 1980, 1992, 2009, and 2019. All rights reserved. "The American Institute of Architects," "American Institute of Architects," "AIA," the AIA Logo, and "AIA Contract Documents" are trademarks of The American Institute of Architects. This draft was produced at 15:01:02 EDT on 06/26/2025 under Subscription No.20250121573 which expires on 04/23/2026, is not for resale, is licensed for one-time use only, and may only be used in accordance with the AIA Contract Documents® Terms of Service. To report copyright violations, e-mail docinfo@aiacontracts.com.
User Notes: (685c3c727c33a690e20fcb11)

and modified, Consent of Surety to Final Payment Form AIA G707 as amended and modified, Contractor's Affidavit, and Construction Change directive Form AIA G714/CMa as amended and modified.

The following documents executed and submitted by Contractor for the Project:»

Number	Title	Pages
001000.4	Bid Form-	
001000.5	Bid Guaranty and Contract Bond-	4
001000.6	Certificate of Compliance-	1
001000.7	Non-Collusion Affidavit of Contractor-	1
001000.8	Bidder's Certifications Concerning EEO Requirements-	1
001000.9	Personal Property Tax Statement-	1
001000.10	Subcontractor and Material Supplier List-	1
001000.15	Warranty Against an Unresolved Finding for Recovery-	1
001000.17	Responsible Bidder Certifications	3
001000.22	Registration Form-	1
	Contractor's MBE/WBE/SBE Goal Compliance Plan	

The following Project documents: »

Number	Title	Pages
	Contractor's Construction Schedule, as modified	
	Contractor's Schedule of Values, as modified	
	Project Schedule as approved by Owner	
	Post Bid Review Notes dated	

DRAFT

AIA Document A132 – 2019. Copyright © 1975, 1980, 1992, 2009, and 2019. All rights reserved. "The American Institute of Architects," "American Institute of Architects," "AIA," the AIA Logo, and "AIA Contract Documents" are trademarks of The American Institute of Architects. This draft was produced at 15:01:02 EDT on 06/26/2025 under Subscription No.20250121573 which expires on 04/23/2026, is not for resale, is licensed for one-time use only, and may only be used in accordance with the AIA Contract Documents® Terms of Service. To report copyright violations, e-mail docinfo@aiacontracts.com.
User Notes: (685c3c727c33a690e20fcb11)

This Agreement is entered into as of the day and year first written above.

Board of County Commissioners,
Hamilton County, Ohio

OWNER *(Signature)*

(Printed name and title)

CONTRACTOR *(Signature)*

(Printed name and title)

As required by Ohio Revised Code § 153.44, this Contract is found to be in accordance with §§ 153.01 to 153.60, inclusive, of the Ohio Revised Code:

Assistant Prosecuting Attorney
Hamilton County, Ohio

Recommended By:

Joe Paul, Director of Stadium and Parking

DRAFT

AIA Document A132 – 2019. Copyright © 1975, 1980, 1992, 2009, and 2019. All rights reserved. "The American Institute of Architects," "American Institute of Architects," "AIA," the AIA Logo, and "AIA Contract Documents" are trademarks of The American Institute of Architects. This draft was produced at 15:01:02 EDT on 06/26/2025 under Subscription No.20250121573 which expires on 04/23/2026, is not for resale, is licensed for one-time use only, and may only be used in accordance with the AIA Contract Documents® Terms of Service. To report copyright violations, e-mail docinfo@aiacontracts.com.
User Notes: (685c3c727c33a690e20fcb11)

SECTION 006100
CONTRACT BOND
(Section 153.57 Ohio Revised Code)

KNOW ALL PERSONS BY THESE PRESENTS, that we, the undersigned _____

_____
(Here insert full name and address or legal title of Contractor)

as Principal and _____
(Here insert full name or legal title of Surety)

as Surety, are hereby held and firmly bound unto The Board of County Commissioners Hamilton County ("Primary Obligee") and Ohio and Messer Construction Co. ("Additional Obligee"), collectively, the Obligees, in the penal sum of

_____dollars ($_____),

for the payment of which well and truly to be made, we hereby jointly and severally bind ourselves, our heirs, executors, administrators, successors, and assigns.

THE CONDITION OF THE ABOVE OBLIGATION IS SUCH, that whereas the above Principal did on the ____day of __, 20___, enter into a contract with the Primary Obligee, which said contract is made a part of this bond the same as though set forth herein;

NOW, if the said Principal shall well and faithfully do and perform each and every condition of such contract; and indemnify the Obligees against all damage suffered by failure to perform such contract according to the provisions thereof and in accordance with the plans, details, specifications and bills of material therefor; and pay all lawful claims of subcontractors, materials suppliers and laborers, for labor performed and materials furnished in carrying forward, performing or completing of said contract; we agreeing and assenting that this undertaking shall be for the benefit of any subcontractor, material supplier or laborer having a just claim, as well as for the Obligees herein; then this obligation shall be void; otherwise the same shall remain in full force and effect; it being expressly understood and agreed that the liability of the Surety for any and all claims hereunder shall in no event exceed the penal amount of this obligation as herein stated.

THE SAID Surety hereby stipulates and agrees that no modifications, omissions or additions in or to the terms of said contract or in or to the plans and specifications therefor shall in any wise affect the obligations of said Surety on this bond, and does hereby waive notice of any modifications, omissions, or additions to the terms of the contract or to the work or to the specifications.

The Surety shall not be liable to the Primary Obligee, the Additional Obligees, or any of them, unless the Primary Obligee, the Additional Obligees, or any of them shall make payments to the Principal (or in the case the Surety arranges for completion of the Contract to the Surety) strictly in accordance with the terms of said Contract as to payments and shall perform all other obligations to be performed under said Contract at the time and in the manner therein set forth; and

PROVIDED, FURTHER that the aggregate liability of the Surety under said Bond to any or all of the Obligees, as their interests may appear, is limited to the penal sum of said Bond, and that the Additional Obligee's rights hereunder are subject to the same defenses Principal and/or Surety have against the Primary Obligee, and that the total liability of the Surety shall in no event exceed the amount recoverable from the Principal by the Primary Obligee under said Contract.

SIGNED AND SEALED This _____ day of _____, 20____

_____
Principal

By:_____

Title:_____

_____
Surety

By:_____
Attorney-in-Fact

_____
Surety company address

_____

_____
Surety Agent's name and address

_____

_____

SECTION 006150
ESCROW AGREEMENT

Agreement made on _____, _____, between The Board of County Commissioners, Hamilton County, Ohio, hereinafter called County, and _____, hereinafter called escrow agent.

WHEREAS, the County and _____, hereinafter called contractor, have entered into a contract identified as _____; and,

WHEREAS, Section 153.12, et. seq., Ohio Revised Code, requires the County to retain certain funds due to the Contractor in order to assure completion of the project which is the subject of the above mentioned contract; and,

WHEREAS, Section 153.63, Ohio Revised Code, provides for the placement of funds retained by the County in an escrow account;

NOW, therefore, it is agreed that:

1. County and Contractor agree to employ _____, to act as escrow agent in connection with funds retained by the County pursuant to the provisions of the contract identified as _____.

2. The escrow account shall be opened on or before _____, _____, with the deposit by the County with the escrow agent, the sum of _____ dollars. The escrow agent shall deposit such funds with the _____
(Bank) (Savings & loan)
in an interest earning savings account.

3. The escrow agent shall hold the escrowed principal and income until receipt of notice from the County and the Contractor, or until receipt of an arbitration order specifying the amount of the escrowed principal to be released and the person to whom it is to be released. Upon receipt of the notice or order, the agent shall promptly pay such amount of principal and a proportionate amount of the escrowed income to the person indicated.

4. The escrow agent may commingle the escrowed funds with funds held pursuant to other escrowed agreements.

5. The escrow agent shall be paid nothing, for its services.

IN WITNESS WHEREOF, the parties have executed this agreement at _____

on the _____ day of _____, _____.

The Board of County Commissioners, Hamilton County, Ohio

By:_____
County Administrator

_____
Witness

_____
Witness

By:_____
Contractor

_____
Witness

_____
Witness

_____hereby accepts employment as escrow and hereby agrees to meet the obligations and perform the duties of escrow agent as set forth in the foregoing agreement.

Date: _____

_____
Escrow Agent

SECTION 007200

GENERAL CONDITIONS

1. General Conditions AIA A232-2019 amended is included and attached.

END OF SECTION

AIA® Document A232® – 2019

General Conditions of the Contract for Construction, *Construction Manager as Adviser Edition*

for the following PROJECT:
(Name, and location or address)

Hamilton County Paycor Stadium
ITB #078-26
South Scoreboard Facade
1 Paycor Stadium
Cincinnati, Ohio 45202

THE CONSTRUCTION MANAGER:
(Name, legal status, and address)

Messer Construction Co.
643 West Court Street
Cincinnati, Ohio 45203

THE OWNER:
(Name, legal status, and address)

Board of County Commissioners, Hamilton County, Ohio
603 County Administration Building
138 East Court Street
Cincinnati, Ohio 45202

THE ARCHITECT:
(Name, legal status, and address)

KZF Design, Inc.
700 Broadway
Cincinnati, Ohio 45202

TABLE OF ARTICLES

1 GENERAL PROVISIONS

2 OWNER

3 CONTRACTOR

4 ARCHITECT AND CONSTRUCTION MANAGER

5 SUBCONTRACTORS

6 CONSTRUCTION BY OWNER OR BY SEPARATE CONTRACTORS

ADDITIONS AND DELETIONS:
The author of this document may have revised the text of the original AIA standard form. An *Additions and Deletions Report* that notes revisions to the standard form text is available from the author and should be reviewed. A vertical line in the left margin of this document indicates where the author has added to or deleted from the original AIA text.

This document has important legal consequences. Consultation with an attorney is encouraged with respect to its completion or modification.

This document is intended to be used in conjunction with AIA Documents A132™–2019, Standard Form of Agreement Between Owner and Contractor, Construction Manager as Adviser Edition; B132™–2019, Standard Form of Agreement Between Owner and Architect, Construction Manager as Adviser Edition; and C132™–2019, Standard Form of Agreement Between Owner and Construction Manager as Adviser.

ELECTRONIC COPYING of any portion of this AIA® Document to another electronic file is prohibited and constitutes a violation of copyright laws as set forth in the footer of this document.

AIA Document A232 – 2019. Copyright © 1992, 2009, and 2019. All rights reserved. "The American Institute of Architects," "American Institute of Architects," "AIA," the AIA Logo, and "AIA Contract Documents" are trademarks of The American Institute of Architects. This draft was produced at 09:51:18 EDT on 06/27/2025 under Subscription No.20250121573 which expires on 04/23/2026, is not for resale, is licensed for one-time use only, and may only be used in accordance with the AIA Contract Documents® Terms of Service. To report copyright violations, e-mail docinfo@aiacontracts.com.
User Notes: (685c3d355a2b85e65d7f4843)

7 CHANGES IN THE WORK

8 TIME

9 PAYMENTS AND COMPLETION

10 PROTECTION OF PERSONS AND PROPERTY

11 INSURANCE AND BONDS

12 UNCOVERING AND CORRECTION OF WORK

13 MISCELLANEOUS PROVISIONS

14 TERMINATION OR SUSPENSION OF THE CONTRACT

15 CLAIMS AND DISPUTES

DRAFT

AIA Document A232 – 2019. Copyright © 1992, 2009, and 2019. All rights reserved. “The American Institute of Architects,” “American Institute of Architects,” “AIA,” the AIA Logo, and “AIA Contract Documents” are trademarks of The American Institute of Architects. This draft was produced at 09:51:18 EDT on 06/27/2025 under Subscription No.20250121573 which expires on 04/23/2026, is not for resale, is licensed for one-time use only, and may only be used in accordance with the AIA Contract Documents® Terms of Service. To report copyright violations, e-mail docinfo@aiacontracts.com.
User Notes: (685c3d355a2b85e65d7f4843)

ARTICLE 1 GENERAL PROVISIONS

§ 1.1 Basic Definitions

§ 1.1.1 The Contract Documents. The Contract Documents are enumerated in the Agreement between the Owner and Contractor (hereinafter the Agreement) and consist of the Agreement, Conditions of the Contract (General, Supplementary and other Conditions), Drawings, Specifications, Addenda issued prior to execution of the Contract, the Contractor's Construction Schedule (as defined in Paragraph 3.10 of the General Conditions and as modified from time to time), the Schedule of Values (as defined in Paragraph 9.2 of the General Conditions and as modified from time to time), the Project Schedule (as defined in Paragraph 3.10 of the General Conditions and as modified from time to time), and other documents listed in Paragraph 9.6 of the Agreement, and Modifications issued after execution of the Contract. A Modification is (1) a written amendment to the Contract signed by both parties, (2) a Change Order, (3) a Construction Change Directive, or (4) a written order for a minor change in the Work issued by the Architect. Unless specifically enumerated in the Agreement, the Contract Documents do not include the advertisement or invitation to bid, Instructions to Bidders, sample forms, other information furnished by the Owner in anticipation of receiving bids or proposals, the Contractor's bid or proposal, or portions of addenda relating to bidding or proposal requirements.

§ 1.1.2 The Contract. The Contract Documents form the Contract for Construction. The Contract represents the entire and integrated agreement between the parties hereto and supersedes prior negotiations, representations, or agreements, either written or oral. The Contract may be amended or modified only by a Modification. The Contract Documents shall not be construed to create a contractual relationship of any kind (1) between the Contractor and the Architect or the Architect's consultants, (2) between the Owner and the Construction Manager or the Construction Manager's consultants, (3) between the Owner and the Architect or the Architect's consultants, (4) between the Contractor and the Construction Manager or the Construction Manager's consultants, (5) between the Owner and a Subcontractor or Sub-subcontractor (6) between the Construction Manager and the Architect, or (7) between any persons or entities other than the Owner and Contractor. The Construction Manager and Architect shall, however, be entitled to performance and enforcement of obligations under the Contract intended to facilitate performance of their duties.

§ 1.1.3 The Work. The term "Work" means the construction, supervision and services required by the Contract Documents, whether completed or partially completed, and includes all other labor, materials, equipment, inspections, testing, tools, supplies, fuel, transportation, installation, temporary facilities, supervision, clean-up and services provided or to be provided by the Contractor to fulfill the Contractor's obligations. The Work may constitute the whole or a part of the Project. The Contractor shall pay all costs of the performance of all its obligations under the Agreement, even if such costs exceed the Contract Sum.

§ 1.1.4 The Project. The Project is the total construction of which the Work performed under the Contract Documents may be the whole or a part and which may include construction by other Contractors, and by the Owner's own forces and Separate Contractors.

§ 1.1.5 Contractors. Contractors are persons or entities, other than the Contractor or Separate Contractors, who perform Work under contracts with the Owner that are administered by the Architect and Construction Manager.

§ 1.1.6 Separate Contractors. Separate Contractors are persons or entities who perform construction under separate contracts with the Owner not administered by the Architect and Construction Manager.

§ 1.1.7 The Drawings. The Drawings are the graphic and pictorial portions of the Contract Documents showing the design, location and dimensions of the Work, generally including plans, elevations, sections, details, schedules, and diagrams.

§ 1.1.8 The Specifications. The Specifications are that portion of the Contract Documents consisting of the written requirements for materials, equipment, systems, standards and workmanship for the Work, and performance of related services.

§ 1.1.9 Instruments of Service. Instruments of Service are representations, in any medium of expression now known or later developed, of the tangible and intangible creative work performed by the Architect and the Architect's consultants under their respective professional services agreements. Instruments of Service may include, without limitation, studies, surveys, models, sketches, drawings, specifications, and other similar materials.

AIA Document A232 – 2019. Copyright © 1992, 2009, and 2019. All rights reserved. "The American Institute of Architects," "American Institute of Architects," "AIA," the AIA Logo, and "AIA Contract Documents" are trademarks of The American Institute of Architects. This draft was produced at 09:51:18 EDT on 06/27/2025 under Subscription No.20250121573 which expires on 04/23/2026, is not for resale, is licensed for one-time use only, and may only be used in accordance with the AIA Contract Documents® Terms of Service. To report copyright violations, e-mail docinfo@aiacontracts.com.
User Notes: (685c3d355a2b85e65d7f4843)

§ 1.1.10 Initial Decision Maker. The Initial Decision Maker is the person identified in the Agreement to render initial decisions on Claims in accordance with Section 15.2. The Initial Decision Maker shall not show partiality to the Owner or Contractor and shall not be liable for results of interpretations or decisions rendered in good faith.

§ 1.2 Correlation and Intent of the Contract Documents

§ 1.2.1 The Contract Documents are to be read and interpreted as a whole. The intent of the Contract Documents is to include all items necessary for the proper execution and completion of the Work and to require Contractor to provide the highest quality and greatest quantity consistent with the Contract Documents. The terms and conditions of this Section 1.2.1 shall not relieve the Contractor of any of its obligations as set forth in any other Section of these General Conditions.

- **.1** On the Drawings, given dimensions shall take precedence over scaled measurements and large-scale drawings over small-scale drawings.
- **.2** Before ordering any materials or doing any Work, the Contractor shall verify measurements at the site and shall be responsible for the correctness of such measurements. No extra charges or compensation will be allowed on account of differences between actual dimensions and the dimensions indicated on the Drawings. Any difference that may be found shall be submitted to the Architect and Owner for resolution before proceeding with the Work.
- **.3** If a minor change in the Work is necessary due to actual field conditions, the Contractor shall submit detailed drawings of such departure to the Architect and Owner for written approval before making the change.

The Owner shall not be required to make any adjustment to either the Contract Sum or Contract Time because of any failure by the Contractor to comply with the requirements of this Section 1.2.1. Actual or alleged conflicts or inconsistencies between the Drawings and Specifications or other Contract Documents shall be brought to the Architect's and Owner's attention in writing, prior to performing the affected Work.

§ 1.2.1.1 The invalidity of any provision of the Contract Documents shall not invalidate the Contract or its remaining provisions. If it is determined that any provision of the Contract Documents violates any law, or is otherwise invalid or unenforceable, then that provision shall be revised to the extent necessary to make that provision legal and enforceable. In such case the Contract Documents shall be construed, to the fullest extent permitted by law, to give effect to the parties' intentions and purposes in executing the Contract.

§ 1.2.2 Organization of the Specifications into divisions, sections and articles, and arrangement of Drawings shall not control the Contractor in dividing the Work among Subcontractors or in establishing the extent of Work to be performed by any trade.

§ 1.2.3 Unless otherwise stated in the Contract Documents, words that have well-known technical or construction industry meanings are used in the Contract Documents in accordance with such recognized meanings.

§ 1.2.4 The Contractor and each of its Subcontractors shall evaluate and satisfy themselves as to the conditions and limitations under which the Work is to be performed, including without limitation (1) the location, condition, layout, and nature of the site and surrounding areas, (2) prevailing climatic conditions, (3) available labor supply and cost, (4) availability and cost of materials, tools, and equipment, and (5) other similar situations. The Contractor shall be solely responsible for providing a safe place for the performance of the Work. The Owner shall not be required to make any adjustment in either the Contract Sum or Contract Time in connection with any failure by the Contractor or any Subcontractor to comply with the requirements of this Section 1.2.4.

§ 1.3 Capitalization

Terms capitalized in these General Conditions include those that are (1) specifically defined, (2) the titles of numbered articles, or (3) the titles of other documents published by the American Institute of Architects.

§ 1.4 Interpretation

In the interest of brevity the Contract Documents frequently omit modifying words such as "all" and "any" and articles such as "the" and "an," but the fact that a modifier or an article is absent from one statement and appears in another is not intended to affect the interpretation of either statement.

AIA Document A232 – 2019. Copyright © 1992, 2009, and 2019. All rights reserved. "The American Institute of Architects," "American Institute of Architects," "AIA," the AIA Logo, and "AIA Contract Documents" are trademarks of The American Institute of Architects. This draft was produced at 09:51:18 EDT on 06/27/2025 under Subscription No.20250121573 which expires on 04/23/2026, is not for resale, is licensed for one-time use only, and may only be used in accordance with the AIA Contract Documents® Terms of Service. To report copyright violations, e-mail docinfo@aiacontracts.com.
User Notes: (685c3d355a2b85e65d7f4843)

§ 1.5 Ownership and Use of Drawings, Specifications, and Other Instruments of Service

§ 1.5.1 The ownership and intellectual property interests in the Drawings, Specifications and other documents prepared for the Project shall be governed by the terms and conditions of the Agreement between Owner and Architect'. The Contractor, Subcontractors, sub-subcontractors, and suppliers shall not own or claim a copyright in the Instruments of Service. Submittal or distribution to meet official regulatory requirements or for other purposes in connection with the Project is not to be construed as publication in derogation of the Owner's, Architect's or Architect's consultants' reserved rights.

§ 1.5.2 The Contractor, Subcontractors, Sub-subcontractors, and suppliers are authorized to use and reproduce the Instruments of Service provided to them, subject to any protocols established pursuant to Sections 1.7 and 1.8, solely and exclusively for execution of the Work. All copies made under this authorization shall bear the copyright notice, if any, shown on the Instruments of Service. The Contractor, Subcontractors, Sub-subcontractors, and suppliers may not use the Instruments of Service on other projects or for additions to the Project outside the scope of the Work without the specific written consent of the Owner, Architect, and the Architect's consultants.

§ 1.5.3 Contractor acknowledges that any information other than the Contract Documents furnished by the Owner to the Contractor is for informational purposes only and does not constitute a representation by the Owner as to any of these items. Contractor acknowledges that any such information may be incomplete or inaccurate and that it has taken such additional steps as may be necessary to satisfy itself as to actual conditions.

§ 1.6 Notice

§ 1.6.1 Except as otherwise provided in Section 1.6.2, where the Contract Documents require one party to notify or give notice to the other party, such notice shall be provided in writing to the designated representative of the party to whom the notice is addressed and shall be deemed to have been duly served if delivered in person, by mail, by courier, or by electronic transmission if a method for electronic transmission is set forth in the Agreement.

§ 1.6.2 Notice of Claims as provided in Section 15.1.3 shall be provided in writing and shall be deemed to have been duly served only if delivered to the designated representative of the party to whom the notice is addressed by certified or registered mail, or by courier providing proof of delivery. For the sake of clarity, electronic transmission is not an acceptable means of delivery for notice of Claims pursuant to Section 15.1 and does not comply with the notice requirements for Section 15.1.

§ 1.7 Digital Data Use and Transmission

If the parties intend to transmit Instruments of Service or any other information or documentation in digital form, they shall endeavor to establish necessary protocols governing such transmissions, unless otherwise already provided in the Agreement or the Contract Documents.

§ 1.8 Building Information Models Use and Reliance

Any use of, or reliance on, all or a portion of a building information model without agreement to written protocols governing the use of, and reliance on, the information contained in the model and without having those protocols set forth in AIA Document E203™–2013, Building Information Modeling and Digital Data Exhibit, and the requisite AIA Document G202™–2013, Project Building Information Modeling Protocol Form, shall be at the using or relying party's sole risk and without liability to the other party and its contractors or consultants, the authors of, or contributors to, the building information model, and each of their agents and employees.

ARTICLE 2 OWNER

§ 2.1 General

§ 2.1.1 The Owner is the person or entity identified as such in the Agreement and is referred to throughout the Contract Documents as if singular in number. The Owner shall designate in writing a representative who shall have express authority to bind the Owner with respect to all matters requiring the Owner's approval or authorization. Except as otherwise provided in Section 4.2.1, the Construction Manager and the Architect do not have such authority. The term "Owner" means the Owner or the Owner's authorized representative.

§ 2.2 Omitted

§ 2.3 Information and Services Required of the Owner

§ 2.3.1 Except for permits and fees that are the responsibility of the Contractor under the Contract Documents, including

AIA Document A232 – 2019. Copyright © 1992, 2009, and 2019. All rights reserved. "The American Institute of Architects," "American Institute of Architects," "AIA," the AIA Logo, and "AIA Contract Documents" are trademarks of The American Institute of Architects. This draft was produced at 09:51:18 EDT on 06/27/2025 under Subscription No.20250121573 which expires on 04/23/2026, is not for resale, is licensed for one-time use only, and may only be used in accordance with the AIA Contract Documents® Terms of Service. To report copyright violations, e-mail docinfo@aiacontracts.com.
User Notes: (685c3d355a2b85e65d7f4843)

those required under Section 3.7.1 or otherwise provided under the Contract Documents, the Owner, with the assistance of the Contractor and/or Construction Manager, shall secure and pay for necessary approvals, easements, assessments and charges required for construction, use or occupancy of permanent structures or for permanent changes in existing facilities. Unless otherwise provided under the Contract Documents, the Owner, assisted by the Construction Manager, shall secure and pay for the building permit.

§ 2.3.2 The Owner shall retain an architect lawfully licensed to practice architecture, or an entity lawfully practicing architecture, in the jurisdiction where the Project is located. That person or entity is identified as the Architect in the Agreement and is referred to throughout the Contract Documents as if singular in number.

§ 2.3.3 The Owner shall retain a construction manager adviser lawfully practicing construction management in the jurisdiction where the Project is located. That person or entity is identified as the Construction Manager in the Agreement and is referred to throughout the Contract Documents as if singular in number.

§ 2.3.4 If the employment of the Construction Manager or Architect terminates, the Owner shall employ a successor construction manager or architect to whom the Contractor has no reasonable objection and whose status under the Contract Documents shall be that of the Construction Manager or Architect, respectively.

§ 2.3.5 The Owner shall furnish surveys describing physical characteristics, legal limitations and utility locations for the site of the Project, and a legal description of the site. The Contractor shall be entitled to rely on the accuracy of information furnished by the Owner but shall exercise proper precautions relating to the safe performance of the Work. The Contractor shall compare such information with observable physical conditions and the Contract Documents and, on the basis of review, promptly report to the Owner in writing any apparent conflicts, errors, or omissions.

§ 2.3.6 The Owner shall furnish information or services required of the Owner by the Contract Documents with reasonable promptness. The Owner shall also furnish any other information or services under the Owner's control and relevant to the Contractor's performance of the Work with reasonable promptness after receiving the Contractor's written request for such information or services.

§ 2.3.7 Unless otherwise provided in the Contract Documents, the Owner shall furnish to the Contractor one copy of the Contract Documents for purposes of making reproductions pursuant to Section 1.5.2.

§ 2.4 Owner's Right to Stop the Work

If the Contractor fails to correct Work that is not in accordance with the requirements of the Contract Documents, fails to make submissions in accordance with the Contract Documents, fails to carry out Work in accordance with the Contract Documents, fails or refuses to provide a sufficient amount of properly supervised and coordinated labor, materials or equipment so as to be able to complete the Work within the Contract Time, or fails to promptly remove and discharge any lien filed upon Owner's property by anyone claiming by, through or based on the requirements of the Contract Documents, the Owner may issue a written order to the Contractor to stop the Work, or any portion thereof, until the cause for such order has been eliminated; however, the right of the Owner to stop the Work shall not give rise to a duty on the part of the Owner to exercise this right for the benefit of the Contractor or any other person or entity, except to the extent required by Section 6.1.3.

§ 2.5 Owner's Right to Carry Out the Work

If the Contractor defaults or neglects to carry out the Work in accordance with the Contract Documents and fails within a seven-day period after receipt of notice from the Owner to commence and continue correction of such default or neglect with diligence and promptness, the Owner may, immediately and without further notice, without prejudice to other remedies the Owner may have, correct such default or neglect. The Construction Manager or Architect may, pursuant to Section 9.5.1, withhold or nullify a Certificate for Payment in whole or in part, to the extent reasonably necessary to reimburse the Owner for the reasonable cost of correcting such deficiencies, including Owner's expenses and compensation for the Construction Manager's and Architect's and their respective consultants' additional services made necessary by such default, neglect, or failure. If current and future payments are not sufficient to cover such amounts, the Contractor shall pay the difference to the Owner. If the Contractor disagrees with the actions of the Owner or the Architect, or the amounts claimed as costs to the Owner, the Contractor may file a Claim pursuant to Article 15.

§ 2.6 When the services of the Architect, Construction Manager, Owner's Representative, testing and inspection

AIA Document A232 – 2019. Copyright © 1992, 2009, and 2019. All rights reserved. "The American Institute of Architects," "American Institute of Architects," "AIA," the AIA Logo, and "AIA Contract Documents" are trademarks of The American Institute of Architects. This draft was produced at 09:51:18 EDT on 06/27/2025 under Subscription No.20250121573 which expires on 04/23/2026, is not for resale, is licensed for one-time use only, and may only be used in accordance with the AIA Contract Documents® Terms of Service. To report copyright violations, e-mail docinfo@aiacontracts.com.
User Notes: (685c3d355a2b85e65d7f4843)

agencies or others are required because of defective Work, neglect, failure, deficiency, or default by the Contractor or anyone employed under or hired by the Contractor, such services of the Architect, Construction Manager, Owner's Representative, testing and inspection agencies or others along with other costs, damages and liabilities incurred by Owner shall be the basis for adjusting the Contract Sum by a Change Order or Construction Change Directive, to compensate Owner for the additional services and such costs, damages and liabilities. This Section 2.6 shall be in addition to any other rights or remedies of the Owner as set forth in this Agreement or provided by law.

§ 2.7 Extent of Owner's and/or Construction Manager's Rights

§ 2.7.1 The rights stated in this Article 2 and elsewhere in the Contract Documents are cumulative and not in limitation of any rights or remedies of the Owner granted in the Contract Documents, at law or in equity.

§ 2.7.2 In no event shall the Owner or Construction Manager be deemed to have control over, charge of, or any responsibility for construction means, methods, techniques, sequences or procedures or for safety precautions and programs in connection with the Work, notwithstanding any of the rights and authority granted the Owner or Construction Manager in the Contract Documents. The Owner shall not be responsible for the Contractor's failure to carry out the Work in accordance with the Contract Documents, or for the acts or omissions of the Contractor, Subcontractors, any of their respective agents or employees, or any other persons performing any of the Work.

ARTICLE 3 CONTRACTOR

§ 3.1 General

§ 3.1.1 The Contractor is the person or entity identified as such in the Agreement and is referred to throughout the Contract Documents as if singular in number. The Contractor shall be lawfully licensed, if required in the jurisdiction where the Project is located. The Contractor shall designate in writing a representative who shall have express authority to bind the Contractor with respect to all matters under this Contract. The term "Contractor" means the Contractor or the Contractor's authorized representative.

§ 3.1.2 The Contractor shall perform the Work in accordance with the Contract Documents.

§ 3.1.3 The Contractor shall not be relieved of its obligations to perform the Work in accordance with the Contract Documents either by activities or duties of the Construction Manager or Architect in their administration of the Contract, or by tests, inspections or approvals required or performed by persons or entities other than the Contractor.

§ 3.2 Review of Contract Documents and Field Conditions by Contractor

§ 3.2.1 Execution of the Contract by the Contractor is a representation that the Contractor has (i) conducted a thorough investigation of the Project site, the Contract Documents and other documents made available to the Contractor by the Owner, (ii) carefully investigated and considered the need to coordinate the Work with the work of other contractors, the possibility of delay in the various components of the Work, the possibility of obstacles and conditions not identified by the Owner (and the cost to the Contractor and impact on its schedule of such unidentified items), conditions relating to the transportation, handling and storage of materials, availability of labor, the effect of any labor agreements, weather, applicable provisions of law and the character and availability of equipment, material and facilities needed before and during the prosecution of the Work, (iii) reviewed all plans, specifications, drawings, reports and other materials with respect to the Project and its systems, (iv) considered staging, access and materials and equipment delivery issues, and (v) evaluated all other matters and conditions of the Project site which may affect the provision of Contractor's services and completion of the Work. In connection with the foregoing, and having visited the Project Site, the Contractor acknowledges and declares that it has no knowledge of any discrepancies, omissions, ambiguities or conflicts in the Contract Documents and that if it becomes aware of any such discrepancies, omissions, ambiguities or conflicts, it will promptly notify Owner and Architect of such fact.

§ 3.2.2 Because the Contract Documents are complementary, the Contractor shall, before starting each portion of the Work, carefully study and compare the various Contract Documents relative to that portion of the Work, as well as the information furnished by the Owner pursuant to Section 2.3.5, shall take field measurements of any existing conditions related to that portion of the Work, and shall observe any conditions at the site affecting it. These obligations are for the purpose of facilitating coordination and construction by the Contractor and are not for the purpose of discovering errors, omissions, or inconsistencies in the Contract Documents; however, the Contractor shall promptly report to the Owner, Construction Manager and Architect any errors, inconsistencies or omissions discovered by or made known to the Contractor as a request for information submitted to the Owner and Construction Manager in such form as the Owner,

AIA Document A232 – 2019. Copyright © 1992, 2009, and 2019. All rights reserved. "The American Institute of Architects," "American Institute of Architects," "AIA," the AIA Logo, and "AIA Contract Documents" are trademarks of The American Institute of Architects. This draft was produced at 09:51:18 EDT on 06/27/2025 under Subscription No.20250121573 which expires on 04/23/2026, is not for resale, is licensed for one-time use only, and may only be used in accordance with the AIA Contract Documents® Terms of Service. To report copyright violations, e-mail docinfo@aiacontracts.com.
User Notes: (685c3d355a2b85e65d7f4843)

Construction Manager and Architect may require. It is recognized that the Contractor's review is made in the Contractor's capacity as a contractor and not as a licensed design professional, unless otherwise specifically provided in the Contract Documents. It is the intent of the Contract Documents to have all systems complete and in proper operation upon completion of the Project. Even if terms required for completion or proper operation of systems are missing from the Drawings or Specifications, such items must be included in the Work.

§ 3.2.3 The Contractor is not required to ascertain that the Contract Documents are in accordance with applicable laws, statutes, ordinances, codes, rules and regulations, or lawful orders of public authorities, but the Contractor shall promptly report to the Owner, Construction Manager and Architect in writing any nonconformity discovered by or made known to the Contractor as a request for information submitted to Construction Manager in such form as the Construction Manager and Architect may require.

§ 3.2.4 If any Work deviates from the requirements of the Contract Documents, the Contractor shall be solely responsible for all resulting costs, damages and expenses. No claim by Contractor (a) that the Work indicated was not constructible, or (b) that performing the Work in accordance with the Contract Documents would have caused or resulted in damages, shall be available to Contractor as a defense or a claim to reduce Contractor's liability, or to increase Contractor's compensation or the Contract Time, except to the extent such defense or claim is expressly permitted elsewhere in the Contract Documents. This provision does not limit any other rights of Owner or Architect or other obligations of the Contractor'.

§ 3.3 Supervision and Construction Procedures

§ 3.3.1 The Contractor shall supervise and direct the Work, using the Contractor's best skill and attention. The Contractor shall be solely responsible for, and have control over, construction means, methods, techniques, sequences, and procedures, and for coordinating all portions of the Work under the Contract. If the Contract Documents give specific instructions concerning construction means, methods, techniques, sequences, or procedures, the Contractor shall evaluate the jobsite safety thereof and shall be solely responsible for the jobsite safety of such means, methods, techniques, sequences, or procedures. If the Contractor determines that such means, methods, techniques, sequences or procedures may not be safe, the Contractor shall give timely notice to the Owner, the Construction Manager, and the Architect, and shall propose alternative means, methods, techniques, sequences, or procedures. The Architect shall evaluate the proposed alternative solely for conformance with the design intent for the completed construction. The Construction Manager shall review the proposed alternative for sequencing, constructability, and coordination impacts on the other Contractors. Unless the Architect or the Construction Manager objects to the Contractor's proposed alternative, the Contractor shall perform the Work using its alternative means, methods, techniques, sequences, or procedures.

§ 3.3.2 The Contractor shall be responsible to the Owner for acts and omissions of the Contractor's employees, Subcontractors and their agents and employees, and other persons or entities performing portions of the Work for, or on behalf of, the Contractor or any of its Subcontractors.

§ 3.3.3 The Contractor shall be responsible for inspection of portions of the Project already performed to determine that such portions are in proper condition to receive subsequent Work. The Contractor shall promptly report deficient conditions in the Work in writing to the Owner and Construction Manager and shall not begin any subsequent Work until deficient conditions are corrected. The Contractor shall allow a reasonable period of time for such corrections. Commencing any such subsequent Work shall be deemed to be an admission by the Contractor that such portions of the Project were in proper condition to receive such Work and the Contractor shall be deemed to have expressly waived any claims it may otherwise have had with respect to such condition.

§ 3.4 Labor and Materials

§ 3.4.1 Unless otherwise provided in the Contract Documents, the Contractor shall provide and pay for labor, materials, equipment, tools, construction equipment and machinery, water, heat, utilities, transportation, and other facilities and services necessary for proper execution and completion of the Work, whether temporary or permanent and whether or not incorporated or to be incorporated in the Work.

§ 3.4.2 Except in the case of minor changes in the Work approved by the Architect in accordance with Section 3.12.8 or ordered by the Architect in accordance with Section 7.4, the Contractor may make substitutions only with the consent of the Owner, after evaluation by the Architect, in consultation with the Construction Manager, and in accordance with a Change Order or Construction Change Directive.

AIA Document A232 – 2019. Copyright © 1992, 2009, and 2019. All rights reserved. "The American Institute of Architects," "American Institute of Architects," "AIA," the AIA Logo, and "AIA Contract Documents" are trademarks of The American Institute of Architects. This draft was produced at 09:51:18 EDT on 06/27/2025 under Subscription No.20250121573 which expires on 04/23/2026, is not for resale, is licensed for one-time use only, and may only be used in accordance with the AIA Contract Documents® Terms of Service. To report copyright violations, e-mail docinfo@aiacontracts.com.
User Notes: (685c3d355a2b85e65d7f4843)

§ 3.4.3 The Contractor shall enforce strict discipline and good order among the Contractor's employees and other persons carrying out the Work. The Contractor shall not permit employment of unfit persons or persons not properly skilled in tasks assigned to them. The Contractor shall use its best efforts and judgment as an experienced contractor to adopt and implement policies and practices designed to avoid work stoppages, slowdowns, disputes or strikes where reasonably possible.

§ 3.4.4 The Contractor shall be responsible for all materials including, without limitation, materials which Owner has purchased, and which are or will be integrated into Contractor's Work and shall ensure that such materials are moved to a secure location so as to avoid damage or theft.

§ 3.5 Warranty

§ 3.5.1 In addition to any warranties implied by law or any special warranties with respect to particular equipment or systems, the Contractor warrants to the Owner, Construction Manager, and Architect that materials and equipment furnished under the Contract will be of good quality and new unless the Contract Documents require or permit otherwise. The Contractor further warrants that the Work will conform to the requirements of the Contract Documents and will be free from defects, except for those inherent in the quality of the Work the Contract Documents require or permit. Work, materials, or equipment not conforming to these requirements shall be considered defective. The Contractor's warranty excludes remedy for damage or defect caused by abuse, alterations to the Work not executed by the Contractor, improper or insufficient maintenance, improper operation, or normal wear and tear and normal usage. If required by the Owner, Construction Manager or Architect, the Contractor shall furnish satisfactory evidence as to the kind and quality of products, systems, materials and equipment provided by the Contractor and/or its subcontractors or suppliers.

§ 3.5.2 All material, equipment, or other special warranties required by the Contract Documents shall be issued in the name of the Owner, or shall be transferable to the Owner, and shall commence in accordance with Section 9.8.4. The Contractor shall perform the Work in such manner as to preserve all manufacturer's warranties.

§ 3.6 Taxes

The Contractor shall pay sales, consumer, use and similar taxes for the Work or portions thereof provided by the Contractor that are legally enacted when bids are received or negotiations concluded, whether or not yet effective or merely scheduled to go into effect.

§ 3.7 Permits, Fees, Notices, and Compliance with Laws

§ 3.7.1 Unless otherwise provided in the Contract Documents, the Owner, assisted by the Construction Manager, shall secure and pay for the building permit. The Contractor shall secure and pay for other permits, fees, licenses, and inspections by government agencies necessary for proper execution and completion of the Work.

§ 3.7.2 The Contractor shall comply with and give notices required by applicable laws, statutes, ordinances, codes, rules and regulations, and lawful orders of public authorities applicable to performance of the Work.

§ 3.7.3 If the Contractor performs Work knowing, or if a contractor of similar experience should have known, it to be contrary to applicable laws, statutes, ordinances, codes, rules and regulations, or lawful orders of public authorities, the Contractor shall assume appropriate responsibility for correction of such Work and shall bear the costs attributable to correction.

§ 3.7.4 Concealed or Unknown Conditions. If the Contractor encounters conditions at the site that are (1) subsurface or otherwise concealed physical conditions that differ materially from those indicated in the Contract Documents or (2) unknown physical conditions of an unusual nature that differ materially from those ordinarily found to exist and generally recognized as inherent in construction activities of the character provided for in the Contract Documents, the Contractor shall promptly provide written notice to the Owner, Construction Manager, and the Architect before conditions are disturbed and in no event later than 14 days after first observance of the conditions. The Architect and Construction Manager will promptly investigate such conditions and, if the Architect, in consultation with the Construction Manager, determines that they differ materially and cause an increase or decrease in the Contractor's cost of, or time required for, performance of any part of the Work, will recommend that an equitable adjustment be made in the Contract Sum or Contract Time, or both. If the Architect, in consultation with the Construction Manager, determines

AIA Document A232 – 2019. Copyright © 1992, 2009, and 2019. All rights reserved. "The American Institute of Architects," "American Institute of Architects," "AIA," the AIA Logo, and "AIA Contract Documents" are trademarks of The American Institute of Architects. This draft was produced at 09:51:18 EDT on 06/27/2025 under Subscription No.20250121573 which expires on 04/23/2026, is not for resale, is licensed for one-time use only, and may only be used in accordance with the AIA Contract Documents® Terms of Service. To report copyright violations, e-mail docinfo@aiacontracts.com.
User Notes: (685c3d355a2b85e65d7f4843)

that the conditions at the site are not materially different from those indicated in the Contract Documents and that no change in the terms of the Contract is justified, the Architect shall promptly notify the Owner, Construction Manager, and Contractor, stating the reasons. If the Owner or Contractor disputes the Architect's determination or recommendation, either party may submit a Claim as provided in Article 15.

§ 3.7.5 If, in the course of the Work, the Contractor encounters human remains or recognizes the existence of burial markers, archaeological sites or wetlands not indicated in the Contract Documents, the Contractor shall immediately suspend any operations that would affect them and shall immediately notify the Owner, Construction Manager, and Architect. Upon receipt of such notice, the Owner shall promptly take any action necessary to obtain governmental authorization required to resume the operations. The Contractor shall continue to suspend such operations until otherwise instructed by the Owner but shall continue with all other operations that do not affect those remains or features. Requests for adjustments in the Contract Sum and Contract Time arising from the existence of such remains or features may be made as provided in Article 15.

§ 3.8 Allowances

§ 3.8.1 The Contractor shall include in the Contract Sum all allowances stated in the Contract Documents. Items covered by allowances shall be supplied for such amounts and by such persons or entities as the Owner may direct, but the Contractor shall not be required to employ persons or entities to whom the Contractor has reasonable objection.

§ 3.8.2 Unless otherwise provided in the Contract Documents:

- **.1** allowances shall cover the cost to the Contractor of materials and equipment delivered at the site and all required taxes, less applicable trade discounts;
- **.2** Contractor's costs for unloading and handling at the site, labor, installation costs, overhead, profit, and other expenses contemplated for stated allowance amounts shall be included in the Contract Sum but not in the allowances; and
- **.3** whenever costs are more than or less than allowances, the Contract Sum shall be adjusted accordingly by Change Order. The amount of the Change Order shall reflect (1) the difference between actual costs and the allowances under Section 3.8.2.1 and (2) changes in Contractor's costs under Section 3.8.2.2. It is expressly agreed and understood however that the Contract Sum shall never be exceeded unless the Owner agrees in writing.

§ 3.8.3 Materials and equipment under an allowance shall be selected by the Owner with reasonable promptness.

§ 3.9 Superintendent

§ 3.9.1 The Contractor shall employ a competent superintendent and necessary assistants who shall be in attendance at the Project site during performance of the Work. The superintendent shall be satisfactory to the Owner so long as the superintendent remains employed by the Contractor or any related entity. The Superintendent shall not be replaced without the Owner's prior written consent. The superintendent shall represent the Contractor, and communications given to the superintendent shall be as binding as if given to the Contractor.

§ 3.9.2 The Contractor, as soon as practicable after award of the Contract, shall notify the Owner and Architect, through the Construction Manager, of the name and qualifications of a proposed superintendent. Within 14 days of receipt of the information, the Construction Manager may notify the Contractor, stating whether the Owner, the Construction Manager, or the Architect (1) has reasonable objection to the proposed superintendent or (2) require additional time for review. Failure of the Construction Manager to provide notice within the 14-day period shall constitute notice of no reasonable objection.

§ 3.9.3 The Contractor shall not employ a proposed superintendent to whom the Owner, Construction Manager, or Architect has made reasonable and timely objection. The Contractor shall not change the superintendent without the Owner's consent, which shall not unreasonably be withheld or delayed.

§ 3.10 Contractor's Construction and Submittal Schedules

§ 3.10.1 The Contractor, promptly after being awarded the Contract, shall submit for the Owner's and Architect's information, and the Construction Manager's use in developing the Project schedule, a Contractor's construction schedule for the Work. The schedule shall contain detail appropriate for the Project, including (1) the date of commencement of the Work, interim schedule milestone dates, and the date of Substantial Completion; (2) an

AIA Document A232 – 2019. Copyright © 1992, 2009, and 2019. All rights reserved. "The American Institute of Architects," "American Institute of Architects," "AIA," the AIA Logo, and "AIA Contract Documents" are trademarks of The American Institute of Architects. This draft was produced at 09:51:18 EDT on 06/27/2025 under Subscription No.20250121573 which expires on 04/23/2026, is not for resale, is licensed for one-time use only, and may only be used in accordance with the AIA Contract Documents® Terms of Service. To report copyright violations, e-mail docinfo@aiacontracts.com.
User Notes: (685c3d355a2b85e65d7f4843)

apportionment of the Work by construction activity; and (3) the time required for completion of each portion of the Work. The schedule shall provide for the orderly progression of the Work to completion and shall not exceed time limits current under the Contract Documents. The schedule shall be revised at appropriate intervals as required by the conditions of the Work and Project. The Contractor shall cooperate with the Construction Manager in scheduling and performing the Contractor's Work to avoid conflict with, and as to cause no delay in, the work or activities of other Contractors, or the construction or operations of the Owner's own forces or Separate Contractors.

.1 The Contractor's Construction Schedule shall utilize Critical Path Method analysis ("CPM") for all major elements and phases of construction of the Work if required by the Owner, Construction Manager or Architect. The Construction Schedule shall identify, consider and coordinate the purchase of materials and equipment requiring long lead time procurement. Construction schedules submitted to the Owner, Construction Manager and Architect shall be in format acceptable to the Owner, Construction Manager and Architect.

.2 The Contractor shall adhere strictly to its most recent Construction Schedule approved by Owner, Construction Manager and Architect for its Work and incorporated into the Project Schedule. Contractor shall prosecute its Work promptly and diligently in accordance with the Project Schedule approved by the Owner, Construction Manager and Architect, as said Project Schedule may be revised or modified from time to time by written approval of Owner.

§ 3.10.2 The Contractor, promptly after being awarded the Contract and thereafter as necessary to maintain a current submittal schedule, shall submit a submittal schedule for the Owner's, Construction Manager's and Architect's approval. The Owner, Architect and Construction Manager's approval shall not be unreasonably delayed or withheld. The submittal schedule shall (1) be coordinated with the Contractor's construction schedule, and (2) allow the Owner, Construction Manager and Architect reasonable time to review submittals. If the Contractor fails to submit a submittal schedule, or fails to provide submittals in accordance with the approved submittal schedule, the Contractor shall not be entitled to any increase in Contract Sum or extension of Contract Time based on the time required for review of submittals.

§ 3.10.3 The Contractor shall participate with other Contractors, the Construction Manager, and the Owner in reviewing and coordinating all schedules for incorporation into the Project schedule that is prepared by the Construction Manager. The Contractor shall make revisions to the construction schedule and submittal schedule as deemed necessary by the Construction Manager to conform to the Project schedule.

§ 3.10.4 The Contractor shall submit with each monthly payment application an updated Construction Schedule revised to reflect the current status of the Work, said updates being subject to the Owner, Construction Manager and Architect's review and approval. Receipt of these monthly updates shall be a condition precedent to any obligation of the Owner hereunder to make monthly progress payments to the Contractor. All updates to the Contractor's Construction Schedule shall conform to the Project Schedule. The Contractor shall perform the Work in accordance with the most recent schedules approved by the Owner, Construction Manager, and Architect, and incorporated into the approved Project schedule.

§ 3.11 Documents and Samples at the Site

The Contractor shall make available, at the Project site, the Contract Documents, including Change Orders, Construction Change Directives, and other Modifications, in good order and marked currently to indicate field changes and selections made during construction, and the approved Shop Drawings, Product Data, Samples, and similar required submittals. These shall be in electronic form or paper copy, available to the Construction Manager, Architect, and Owner, and delivered to the Construction Manager for submittal to the Owner upon completion of the Work as a record of the Work as constructed. The Contractor shall pay all costs incurred by the Architect, Construction Manager and Owner for attendant delay, interference, hindrance or disruption of the Project due to excessive re-submittals without fault of the Architect, Construction Manager, separate Contractors or the Owner. Unless otherwise provided in the Contract Documents, re-submittals in excess of two without fault of the Architect, Construction Manager or Owner shall be deemed excessive. If the Shop Drawings or other submittals show variations from the requirements of the Contract Documents, the Contractor shall specify such variations in the Contractor's letter of submittal to the Architect accompanying the submittal.

§ 3.12 Shop Drawings, Product Data, and Samples

§ 3.12.1 Shop Drawings are drawings, diagrams, schedules, and other data specially prepared for the Work by the Contractor or a Subcontractor, Sub-subcontractor, manufacturer, supplier, or distributor to illustrate some portion of the

AIA Document A232 – 2019. Copyright © 1992, 2009, and 2019. All rights reserved. "The American Institute of Architects," "American Institute of Architects," "AIA," the AIA Logo, and "AIA Contract Documents" are trademarks of The American Institute of Architects. This draft was produced at 09:51:18 EDT on 06/27/2025 under Subscription No.20250121573 which expires on 04/23/2026, is not for resale, is licensed for one-time use only, and may only be used in accordance with the AIA Contract Documents® Terms of Service. To report copyright violations, e-mail docinfo@aiacontracts.com.
User Notes: (685c3d355a2b85e65d7f4843)

Work.

§ 3.12.2 Product Data are illustrations, standard schedules, performance charts, instructions, brochures, diagrams, and other information furnished by the Contractor to illustrate materials or equipment for some portion of the Work.

§ 3.12.3 Samples are physical examples that illustrate materials, equipment, or workmanship, and establish standards by which the Work will be judged.

§ 3.12.4 Shop Drawings, Product Data, Samples, and similar submittals are not Contract Documents. Their purpose is to demonstrate how the Contractor proposes to conform to the information given and the design concept expressed in the Contract Documents for those portions of the Work for which the Contract Documents require submittals. Review by the Architect and Construction Manager is subject to the limitations of Sections 4.2.10 through 4.2.12. Informational submittals upon which the Construction Manager and Architect are not expected to take responsive action may be so identified in the Contract Documents. Submittals that are not required by the Contract Documents may be returned by the Construction Manager or Architect without action. All Shop Drawings (i) shall comply with applicable performance specifications and (ii) comply with all applicable laws and regulations. Shop Drawings shall be modified at no cost to the Owner as necessary to obtain any permits or approvals, and as required to comply with any applicable laws and regulations or requirement of the Contract Documents.

§ 3.12.5 The Contractor shall review for compliance with the Contract Documents, approve, and submit to the Construction Manager, Shop Drawings, Product Data, Samples, and similar submittals required by the Contract Documents, in accordance with the Project submittal schedule approved by the Owner, Construction Manager and Architect or, in the absence of an approved Project submittal schedule, with reasonable promptness and in such sequence as to cause no delay in the Work or in the activities of other Contractors, Separate Contractors, or the Owner's own forces. The Contractor shall cooperate with the Construction Manager in the coordination of the Contractor's Shop Drawings, Product Data, Samples, and similar submittals with related documents submitted by other Contractors.

§ 3.12.6 By submitting Shop Drawings, Product Data, Samples, and similar submittals, the Contractor represents to the Owner, Construction Manager, and Architect, that the Contractor has (1) reviewed and approved them, (2) determined and verified materials, field measurements and field construction criteria related thereto, or will do so, and (3) checked and coordinated the information contained within such submittals with the requirements of the Work and of the Contract Documents.

§ 3.12.7 The Contractor shall perform no portion of the Work for which the Contract Documents require submittal and review of Shop Drawings, Product Data, Samples, or similar submittals, until the respective submittal has been reviewed and approved by the Architect.

§ 3.12.8 The Work shall be in accordance with approved submittals except that the Contractor shall not be relieved of responsibility for deviations from the requirements of the Contract Documents by the Architect's approval of Shop Drawings, Product Data, Samples, or similar submittals, unless the Contractor has specifically notified the Construction Manager and Architect of such deviation at the time of submittal and (1) the Architect has given written approval to the specific deviation as a minor change in the Work, or (2) a Change Order or Construction Change Directive has been issued authorizing the deviation. The Contractor shall not be relieved of responsibility for errors or omissions in Shop Drawings, Product Data, Samples, or similar submittals, by the Architect's approval thereof. The issuance of any submittal by the Contractor constitutes a certification by the Contractor that each item has been reviewed in detail and is in full conformance with the Contract Documents unless expressly noted otherwise in writing by Contractor. Review or approval of submittals by the Owner, Construction Manager or Architect does not relieve the Contractor of responsibility for full compliance with all Contract Documents and other contract requirements, unless the Owner, Construction Manager and Architect have given separate written approval to any specific variation. Any variation from the Contract Documents shall be noted prominently and in sufficient detail on both the transmittal document and on the submittal itself. The Contractor shall set forth, in writing, the reason for and description of the variation. If no variations are noted, issuance of the submittal shall constitute a representation by the Contractor to the Owner, Construction Manager and Architect that the submittal complies in all respects with the Contract Documents. The purpose of submittals is to demonstrate, for those portions of the Work for which submittals are required, the way Contractor proposes to conform to the information given and the design concept expressed in the Contract Documents. Review of submittals by the Owner, Construction Manager or Architect is subject to the limitations of the Contract Documents. Architect, Construction Manager and Owner's review of submittals shall not relieve Contractor of its responsibility for

AIA Document A232 – 2019. Copyright © 1992, 2009, and 2019. All rights reserved. "The American Institute of Architects," "American Institute of Architects," "AIA," the AIA Logo, and "AIA Contract Documents" are trademarks of The American Institute of Architects. This draft was produced at 09:51:18 EDT on 06/27/2025 under Subscription No.20250121573 which expires on 04/23/2026, is not for resale, is licensed for one-time use only, and may only be used in accordance with the AIA Contract Documents® Terms of Service. To report copyright violations, e-mail docinfo@aiacontracts.com.
User Notes: (685c3d355a2b85e65d7f4843)

errors or omissions in Shop Drawings, Product Data or Samples.

§ 3.12.9 The Contractor shall direct specific attention, in writing or on resubmitted Shop Drawings, Product Data, Samples, or similar submittals, to revisions other than those requested by the Construction Manager and Architect on previous submittals. In the absence of such notice, the Architect's approval of a resubmission shall not apply to such revisions.

§ 3.12.10 The Contractor shall not be required to provide professional services that constitute the practice of architecture or engineering unless such services are specifically required by the Contract Documents for a portion of the Work or unless the Contractor needs to provide such services in order to carry out the Contractor's responsibilities for construction means, methods, techniques, sequences, and procedures. The Contractor shall not be required to provide professional services in violation of applicable law.

§ 3.12.10.1 If professional design services or certifications by a design professional related to systems, materials, or equipment are specifically required of the Contractor by the Contract Documents, the Owner and the Architect will specify all performance and design criteria that such services must satisfy. The Contractor shall be entitled to rely upon the adequacy and accuracy of the performance and design criteria provided in the Contract Documents. The Contractor shall cause such services or certifications to be provided by an appropriately licensed design professional, whose signature and seal shall appear on all drawings, calculations, specifications, certifications, Shop Drawings, and other submittals prepared by such professional. Shop Drawings, and other submittals related to the Work, designed or certified by such professional, if prepared by others, shall bear such professional's written approval when submitted to the Architect. The Owner, the Architect, and the Construction Manager shall be entitled to rely upon the adequacy and accuracy of the services, certifications, and approvals performed or provided by such design professionals, provided the Owner and Architect have specified to the Contractor the performance and design criteria that such services must satisfy. Pursuant to this Section 3.12.10, the Architect will review and approve or take other appropriate action on submittals only for the limited purpose of checking for conformance with information given and the design concept expressed in the Contract Documents. The Construction Manager shall review submittals for sequencing, constructability, and coordination impacts on other Contractors.

§ 3.12.10.2 If the Contract Documents require the Contractor's design professional to certify that the Work has been performed in accordance with the design criteria, the Contractor shall furnish such certifications to the Construction Manager and Architect at the time and in the form specified by the Architect.

§ 3.13 Use of Site

§ 3.13.1 The Contractor shall confine operations at the site to areas permitted by applicable laws, statutes, ordinances, codes, rules and regulations, lawful orders of public authorities, and the Contract Documents and shall not unreasonably encumber the site with materials or equipment.

§ 3.13.2 The Contractor shall coordinate the Contractor's operations with, and secure the approval of, the Construction Manager before using any portion of the site. The Contractor shall perform the Work so as not to unreasonably interrupt or interfere any operations of the Owner or its Separate Contractors on the site.

§ 3.14 Cutting and Patching

§ 3.14.1 The Contractor shall be responsible for cutting, fitting, or patching required to complete the Work or to make its parts fit together properly. All areas requiring cutting, fitting, or patching shall be restored to the condition existing prior to the cutting, fitting, or patching, unless otherwise required by the Contract Documents. Existing structures and facilities, including but not limited to buildings, utilities, topography, streets, curbs, walks, landscape materials, and other improvements that are damaged or removed due to required excavations or Contractor's Work, shall be patched, repaired or replaced by the Contractor to the satisfaction of the Architect, the owner of such structures and facilities, and authorities having jurisdiction as required by the Plans and Specifications. In the event that a local authority having jurisdiction requires that such repairing and patching be done with its own labor and/or materials, the Contractor shall abide by such regulations and pay for such work.

§ 3.14.2 The Contractor shall not damage or endanger a portion of the Work or fully or partially completed construction of the Owner, Separate Contractors, or of other Contractors by cutting, patching, or otherwise altering such construction, or by excavation. The Contractor shall not cut or otherwise alter construction by the Owner, Separate

AIA Document A232 – 2019. Copyright © 1992, 2009, and 2019. All rights reserved. "The American Institute of Architects," "American Institute of Architects," "AIA," the AIA Logo, and "AIA Contract Documents" are trademarks of The American Institute of Architects. This draft was produced at 09:51:18 EDT on 06/27/2025 under Subscription No.20250121573 which expires on 04/23/2026, is not for resale, is licensed for one-time use only, and may only be used in accordance with the AIA Contract Documents® Terms of Service. To report copyright violations, e-mail docinfo@aiacontracts.com.
User Notes: (685c3d355a2b85e65d7f4843)

Contractors, or by other Contractors except with written consent of the Construction Manager, Owner, and such other Contractors or Separate Contractors. Consent shall not be unreasonably withheld. The Contractor shall not unreasonably withhold, from the Separate Contractors, other Contractors, or the Owner, its consent to cutting or otherwise altering the Work.

§ 3.15 Cleaning Up

§ 3.15.1 The Contractor shall keep the premises and surrounding area free from accumulation of waste materials and rubbish caused by operations under the Contract. At completion of the Work, the Contractor shall remove waste materials, rubbish, the Contractor's tools, construction equipment, machinery, and surplus materials from and about the Project.

§ 3.15.2 The Contractor shall, at its own cost and expense, (1) keep its own work area within the Project Site reasonably free and clear of all waste materials and other rubbish accumulated in connection with the execution of its Work, (2) clean and remove from its own Work and from all contiguous work of others any soiling, staining, mortar, plaster, concrete or dirt caused by the execution of its Work and make good all defects resulting therefrom, (3) at the completion of its Work in each area, perform such cleaning as may be required to leave the area "broom clean", and (4) upon final completion of its Work, remove all of its tools, equipment, scaffolds, shanties and surplus materials. The Contractor's Work Site shall be kept reasonably neat and clean at all times to eliminate hazards, reduce hazard from fire, and to allow easy circulation for workers and materials. Any sidewalk, roadway, or temporary passageway used by the public must be kept clean and safely usable at all times. In the event Contractor fails to clean up as required, Owner, Construction Manager or Architect may give twenty-four (24) hours' notice, which shall be considered given when submitted in writing to the Contractor's field supervisor. After twenty-four (24) hours, if the deficiency has not been remedied to the Owner's satisfaction, the Owner may proceed with the required clean up and deduct the cost thereof, including the cost of additional services of the Owner's Representative, from any amounts due Contractor.

§ 3.16 Access to Work

The Contractor shall provide the Owner, Construction Manager, and Architect with access to the Work in preparation and progress wherever located.

§ 3.17 Royalties, Patents and Copyrights

The Contractor shall pay all royalties and license fees. The Contractor shall defend suits or claims for infringement of copyrights and patent rights and shall hold the Owner, Construction Manager, and Architect harmless from loss on account thereof, but shall not be responsible for defense or loss when a particular design, process, or product of a particular manufacturer or manufacturers is required by the Contract Documents, or where the copyright violations are contained in Drawings, Specifications, or other documents prepared by the Owner, Architect, or Construction Manager. However, if an infringement of a copyright or patent is discovered by, or made known to, the Contractor, the Contractor shall be responsible for the loss unless the information is promptly furnished to the Owner and Architect through the Construction Manager, specifically setting forth Contractor's reason for such belief. In the event of an infringement of any copyright or patent by Contractor, the Contractor shall use its best efforts, at its sole expense and option, to (i) obtain for Owner the right to continue using such materials, equipment or software; or (ii) modify the item(s) in question so that it is no longer infringing; or (iii) replace such item(s) with a non-infringing functional equivalent reasonably acceptable to Owner.

§ 3.18 Indemnification

§ 3.18.1 To the fullest extent permitted by law, the Contractor shall defend, indemnify and hold harmless the Owner, Cincinnati Bengals , Inc., Paul Brown Stadium LTD, Construction Manager, Architect, Construction Manager's and Architect's consultants, and their respective affiliates, officers, directors, shareholders, partners, successors-in-interest, agents and employees of any of them from and against claims, damages, agreed judgments, settlements, default judgments, other judgments, losses, and expenses, including but not limited to attorneys' fees, arising out of or resulting from performance of the Work or relating to or arising from this Agreement to the extent caused by the negligent and/or intentional acts or omissions or other fault of the Contractor, a Subcontractor, anyone directly or indirectly employed by them, or anyone for whose acts they may be liable, regardless of whether or not such claim, damage, loss, or expense is caused in part by a party indemnified hereunder. Such obligation shall not be construed to negate, abridge, or reduce other rights or obligations of indemnity that would otherwise exist as to a party or person described in this Section 3.18.

§ 3.18.2 In claims against any person or entity indemnified under this Section 3.18 by an employee of the Contractor, a Subcontractor, anyone directly or indirectly employed by them, or anyone for whose acts they may be liable, the

AIA Document A232 – 2019. Copyright © 1992, 2009, and 2019. All rights reserved. "The American Institute of Architects," "American Institute of Architects," "AIA," the AIA Logo, and "AIA Contract Documents" are trademarks of The American Institute of Architects. This draft was produced at 09:51:18 EDT on 06/27/2025 under Subscription No.20250121573 which expires on 04/23/2026, is not for resale, is licensed for one-time use only, and may only be used in accordance with the AIA Contract Documents® Terms of Service. To report copyright violations, e-mail docinfo@aiacontracts.com.
User Notes: (685c3d355a2b85e65d7f4843)

indemnification obligation under Section 3.18.1 shall not be limited by a limitation on amount or type of damages, compensation, or benefits payable by or for the Contractor or a Subcontractor under workers' compensation acts, disability benefit acts, or other employee benefit acts.

ARTICLE 4 ARCHITECT AND CONSTRUCTION MANAGER

§ 4.1 General

§ 4.1.1 The Architect is the person or entity retained by the Owner pursuant to Section 2.3.2 and identified as such in the Agreement.

§ 4.1.2 The Construction Manager is the person or entity retained by the Owner pursuant to Section 2.3.3 and identified as such in the Agreement.

§ 4.1.3 Duties, responsibilities, and limitations of authority of the Construction Manager and Architect as set forth in the Contract Documents shall not be restricted, modified, or extended without written consent of the Owner, Construction Manager, Architect, and Contractor. Consent shall not be unreasonably withheld.

§ 4.2 Administration of the Contract

§ 4.2.1 The Construction Manager and Architect will provide administration of the Contract as described in the Contract Documents and will be the Owner's representatives during construction until the date the Architect issues the final Certificate for Payment. The Construction Manager and Architect will have authority to act on behalf of the Owner only to the extent provided in the Contract Documents.

§ 4.2.2 The Architect will visit the site at intervals appropriate to the stage of construction, or as otherwise agreed with the Owner, to become generally familiar with the progress and quality of the portion of the Work completed, and to determine in general if the Work observed is being performed in a manner indicating that the Work, when fully completed, will be in accordance with the Contract Documents. However, the Architect will not be required to make exhaustive or continuous on-site inspections to check the quality or quantity of the Work. On the basis of the site visits, the Architect will keep the Owner and the Construction Manager reasonably informed about the progress and quality of the portion of the Work completed, and promptly report to the Owner and Construction Manager known deviations from the Contract Documents and defects and deficiencies observed in the Work.

§ 4.2.3 The Construction Manager shall provide one or more representatives who shall be in attendance at the Project site whenever the Work is being performed. The Construction Manager will determine in general if the Work observed is being performed in accordance with the Contract Documents, will keep the Owner and Architect reasonably informed of the progress of the Work, and will promptly report to the Owner and Architect known deviations from the Contract Documents and the most recent Project schedule, and defects and deficiencies observed in the Work.

§ 4.2.4 The Construction Manager will schedule and coordinate the activities of the Contractor and other Contractors in accordance with the latest approved Project schedule.

§ 4.2.5 The Construction Manager, except to the extent required by Section 4.2.4, and Architect will not have control over, charge of, or responsibility for, the construction means, methods, techniques, sequences or procedures, or for the safety precautions and programs in connection with the Work, since these are solely the Contractor's rights and responsibilities under the Contract Documents, and neither will be responsible for the Contractor's failure to perform the Work in accordance with the requirements of the Contract Documents. Neither the Construction Manager nor the Architect will have control over or charge of, or be responsible for acts or omissions of, the Contractor, Subcontractors, or their agents or employees, or of any other persons or entities performing portions of the Work.

§ 4.2.6 Communications. The Owner shall communicate with the Construction Manager's consultants through the Construction Manager about matters arising out of or relating to the Contract Documents. The Owner and Construction Manager shall include the Architect in all communications that relate to or affect the Architect's services or professional responsibilities. Communications by and with the Architect's consultants shall be through the Architect. Communications by and with Subcontractors and suppliers shall be through the Contractor. Communications by and with other Contractors shall be through the Construction Manager or Owner. Communications by and with the Owner's own forces and Separate Contractors shall be through the Owner. The Contract Documents may specify other communication protocols. The Contractor shall copy the Owner on all correspondence the Contractor sends to the

AIA Document A232 – 2019. Copyright © 1992, 2009, and 2019. All rights reserved. "The American Institute of Architects," "American Institute of Architects," "AIA," the AIA Logo, and "AIA Contract Documents" are trademarks of The American Institute of Architects. This draft was produced at 09:51:18 EDT on 06/27/2025 under Subscription No.20250121573 which expires on 04/23/2026, is not for resale, is licensed for one-time use only, and may only be used in accordance with the AIA Contract Documents® Terms of Service. To report copyright violations, e-mail docinfo@aiacontracts.com.
User Notes: (685c3d355a2b85e65d7f4843)

Architect. The Architect shall copy the Owner on all correspondence the Architect sends to the Contractor.

§ 4.2.7 The Construction Manager and Architect will review and certify all Applications for Payment by the Contractor, in accordance with the provisions of Article 9. The Construction Manager and/or Architect's certification for payment shall not be a representation that the Construction Manager or Architect has (1) made exhaustive or continuous on-site inspections to check the quality or quantity of the Work, (2) reviewed construction means, methods, techniques, sequences or procedures, (3) verified the requisitions received from Subcontractors and material suppliers and other data requested by the Owner to substantiate the Contractor's right to payment, or (4) ascertained how or for what purpose the Contractor has used money previously paid on account of the Contract Sum.

§ 4.2.8 The Architect, Owner and Construction Manager have authority to reject Work that does not conform to the Contract Documents, and will notify each other about the rejection. Whenever the Construction Manager considers it necessary or advisable, the Construction Manager will have authority to require inspection or testing of the Work in accordance with Sections 13.4.2 and 13.4.3, upon written authorization of the Owner, whether or not the Work is fabricated, installed or completed. The foregoing authority of the Construction Manager will be subject to the provisions of Sections 4.2.18 through 4.2.20 inclusive, with respect to interpretations and decisions of the Architect. However, neither the Architect's nor the Construction Manager's authority to act under this Section 4.2.8 nor a decision made by either of them in good faith either to exercise or not to exercise such authority shall give rise to a duty or responsibility of the Architect or the Construction Manager to the Contractor, Subcontractors, suppliers, their agents or employees, or other persons performing any of the Work.

§ 4.2.9 Utilizing the submittal schedule provided by the Contractor, the Construction Manager shall prepare, and revise as necessary, a Project submittal schedule incorporating information from other Contractors, the Owner, Owner's consultants, Owner's Separate Contractors and vendors, governmental agencies, and participants in the Project under the management of the Construction Manager. The Project submittal schedule and any revisions shall be submitted to the Architect for approval.

§ 4.2.10 The Construction Manager will receive and promptly review for conformance with the submittal requirements of the Contract Documents, all submittals from the Contractor such as Shop Drawings, Product Data, and Samples. Where there are other Contractors, the Construction Manager will also check and coordinate the information contained within each submittal received from the Contractor and other Contractors, and transmit to the Architect those recommended for approval. By submitting Shop Drawings, Product Data, Samples, and similar submittals, the Construction Manager represents to the Owner and Architect that the Construction Manager has reviewed and recommended them for approval. The Construction Manager's actions will be taken in accordance with the Project submittal schedule approved by the Architect or, in the absence of an approved Project submittal schedule, with reasonable promptness while allowing sufficient time to permit adequate review by the Architect.

§ 4.2.11 The Architect will review and approve, or take other appropriate action upon, the Contractor's submittals such as Shop Drawings, Product Data, and Samples, but only for the limited purpose of checking for conformance with information given and the design concept expressed in the Contract Documents. The Architect's action will be taken in accordance with the submittal schedule approved by the Architect or, in the absence of an approved submittal schedule, with reasonable promptness while allowing sufficient time in the Architect's professional judgment to permit adequate review. Upon the Architect's completed review, the Architect shall transmit its submittal review to the Construction Manager.

§ 4.2.12 Review of the Contractor's submittals by the Construction Manager and Architect is not conducted for the purpose of determining the accuracy and completeness of other details such as dimensions and quantities, or for substantiating instructions for installation or performance of equipment or systems, all of which remain the responsibility of the Contractor as required by the Contract Documents. The Construction Manager and Architect's review of the Contractor's submittals shall not relieve the Contractor of the obligations under Sections 3.3, 3.5, and 3.12. The Construction Manager and Architect's review shall not constitute approval of safety precautions or of any construction means, methods, techniques, sequences, or procedures. The Architect's approval of a specific item shall not indicate approval of an assembly of which the item is a component.

§ 4.2.13 The Construction Manager, Owner or Contractor will prepare Change Orders and Construction Change Directives.

AIA Document A232 – 2019. Copyright © 1992, 2009, and 2019. All rights reserved. "The American Institute of Architects," "American Institute of Architects," "AIA," the AIA Logo, and "AIA Contract Documents" are trademarks of The American Institute of Architects. This draft was produced at 09:51:18 EDT on 06/27/2025 under Subscription No.20250121573 which expires on 04/23/2026, is not for resale, is licensed for one-time use only, and may only be used in accordance with the AIA Contract Documents® Terms of Service. To report copyright violations, e-mail docinfo@aiacontracts.com.
User Notes: (685c3d355a2b85e65d7f4843)

§ 4.2.14 The Construction Manager and the Architect will take appropriate action on Change Orders or Construction Change Directives in accordance with Article 7, and the Architect will have authority to order minor changes in the Work as provided in Section 7.4. The Architect, in consultation with the Construction Manager, will investigate and make determinations and recommendations regarding concealed and unknown conditions as provided in Section 3.7.4.

§ 4.2.15 Utilizing the documents provided by the Contractor, the Construction Manager will maintain at the site for the Owner one copy of all Contract Documents, approved Shop Drawings, Product Data, Samples, and similar required submittals, in good order and marked currently to record all changes and selections made during construction. These will be available to the Architect and the Contractor, and will be delivered to the Owner upon completion of the Project.

§ 4.2.16 The Construction Manager will assist the Architect in conducting inspections to determine the date or dates of Substantial Completion and the date of Final Completion; issue Certificates of Substantial Completion in conjunction with the Architect pursuant to Section 9.8; and receive and forward to the Owner written warranties and related documents required by the Contract and assembled by the Contractor pursuant to Section 9.10. The Construction Manager will forward to the Architect a final Application and Certificate for Payment or final Project Application and Project Certificate for Payment upon the Contractor's compliance with the requirements of the Contract Documents.

§ 4.2.17 If the Owner and Architect agree, the Architect will provide one or more Project representatives to assist in carrying out the Architect's responsibilities at the site. The Owner shall notify the Construction Manager of any change in the duties, responsibilities and limitations of authority of the Project representatives.

§ 4.2.18 The Architect will interpret and decide matters concerning performance under, and requirements of, the Contract Documents on written request of the Construction Manager, Owner, or Contractor through the Construction Manager. The Architect's response to such requests will be made in writing within any time limits agreed upon or otherwise with reasonable promptness.

§ 4.2.19 Interpretations and decisions of the Architect will be consistent with the intent of, and reasonably inferable from, the Contract Documents and will be in writing or in the form of drawings. When making such interpretations and decisions, the Architect will endeavor to secure faithful performance by both Owner and Contractor, will not show partiality to either, and will not be liable for results of interpretations or decisions so rendered in good faith.

§ 4.2.20 The Owner's decisions, after consultation with the Architect, on matters relating to aesthetic effect will be final if consistent with the intent expressed in the Contract Documents.

§ 4.2.21 The Construction Manager will receive and review requests for information from the Contractor, and forward each request for information to the Architect, with the Construction Manager's recommendation. The Architect will review and respond in writing, through the Construction Manager, to requests for information about the Contract Documents. The Construction Manager's recommendation and the Architect's response to each request will be made in writing within any time limits agreed upon or otherwise with reasonable promptness. If appropriate, the Architect will prepare and issue supplemental Drawings and Specifications in response to the requests for information.

ARTICLE 5 SUBCONTRACTORS

§ 5.1 Definitions

§ 5.1.1 A Subcontractor is a person or entity who has a direct contract with the Contractor to perform a portion of the Work at the site. The term "Subcontractor" is referred to throughout the Contract Documents as if singular in number and means a Subcontractor or an authorized representative of the Subcontractor. The term "Subcontractor" does not include other Contractors or Separate Contractors or the subcontractors of other Contractors or Separate Contractors.

§ 5.1.2 A Sub-subcontractor is a person or entity who has a direct or indirect contract with a Subcontractor to perform a portion of the Work at the site. The term "Sub-subcontractor" is referred to throughout the Contract Documents as if singular in number and means a Sub-subcontractor or an authorized representative of the Sub-subcontractor.

§ 5.1.3 "Subcontractors of all tiers" shall mean collectively Subcontractors and Sub-subcontractors.

§ 5.2 Award of Subcontracts and Other Contracts for Portions of the Work

§ 5.2.1 Unless otherwise stated in the Contract Documents, the Contractor, as soon as practicable, but not later than five

AIA Document A232 – 2019. Copyright © 1992, 2009, and 2019. All rights reserved. "The American Institute of Architects," "American Institute of Architects," "AIA," the AIA Logo, and "AIA Contract Documents" are trademarks of The American Institute of Architects. This draft was produced at 09:51:18 EDT on 06/27/2025 under Subscription No.20250121573 which expires on 04/23/2026, is not for resale, is licensed for one-time use only, and may only be used in accordance with the AIA Contract Documents® Terms of Service. To report copyright violations, e-mail docinfo@aiacontracts.com.
User Notes: (685c3d355a2b85e65d7f4843)

(5) business days, after award of the Contract, shall notify the Construction Manager, for review by the Owner, Construction Manager and Architect, of the persons or entities proposed for each principal portion of the Work, including those who are to furnish materials or equipment fabricated to a special design. Within 14 days of receipt of the information, the Construction Manager or Owner may notify the Contractor whether the Owner, the Construction Manager or the Architect (1) has reasonable objection to any such proposed person or entity or, (2) requires additional time for review. Failure of the Construction Manager or Owner to provide notice within the 14-day period shall constitute notice of no reasonable objection.

§ 5.2.2 The Contractor shall not contract with a proposed person or entity to whom the Owner, Construction Manager or Architect has made reasonable and timely objection. The Contractor shall not be required to contract with anyone to whom the Contractor has made reasonable objection.

§ 5.2.3 If the Owner, Construction Manager or Architect has reasonable objection to a person or entity proposed by the Contractor, the Contractor shall propose another to whom the Owner, Construction Manager or Architect has no reasonable objection. If the proposed but rejected Subcontractor was reasonably capable of performing the Work and unreasonably objected, the Contract Sum and Contract Time shall be increased or decreased by the difference, if any, occasioned by such change, and an appropriate Change Order shall be issued before commencement of the substitute Subcontractor's Work. However, no increase in the Contract Sum or Contract Time shall be allowed for such change unless the Contractor has acted promptly and responsively in submitting names as required.

§ 5.2.4 The Contractor shall not substitute a Subcontractor, person, or entity for one previously selected if the Owner, Construction Manager or Architect makes reasonable objection to such substitution.

§ 5.2.5 The Contractor understands and agrees that the Contractor alone is responsible to the Owner for all of the Work under the Contract Documents and that any review of Subcontractors or Sub-subcontractors by the Owner, Construction Manager or Architect will not in any way make the Owner responsible to any Subcontractor or Sub-subcontractor or make the Owner responsible for the actions or omissions of any Subcontractor or Sub-subcontractors.

§ 5.3 Subcontractual Relations

§ 5.3.1 By appropriate written agreement, the Contractor shall require each Subcontractor, to the extent of the Work to be performed by the Subcontractor, to be bound to the Contractor by terms of the Contract Documents, and to assume toward the Contractor all the obligations and responsibilities, including the responsibility for safety of the Subcontractor's Work, that the Contractor, by these Contract Documents, assumes toward the Owner, Construction Manager and Architect. Each subcontract agreement shall preserve and protect the rights of the Owner, Construction Manager and Architect under the Contract Documents with respect to the Work to be performed by the Subcontractor so that subcontracting thereof will not prejudice such rights, and shall allow to the Subcontractor, unless specifically provided otherwise in the subcontract agreement, the benefit of all rights, remedies, and redress against the Contractor that the Contractor, by the Contract Documents, has against the Owner. Where appropriate, the Contractor shall require each Subcontractor to enter into similar agreements with Sub-subcontractors. The Contractor shall make available to each proposed Subcontractor, prior to the execution of the subcontract agreement, copies of the Contract Documents to which the Subcontractor will be bound, and, upon written request of the Subcontractor, identify to the Subcontractor terms and conditions of the proposed subcontract agreement that may be at variance with the Contract Documents. Subcontractors will similarly make copies of applicable portions of such documents available to their respective proposed Sub-subcontractors. All subcontracts between Contractor and Subcontractor shall be in writing and shall be made available to the Owner upon request.

§ 5.3.2 All subcontracts shall specifically provide that:

- **.1** the Owner is an intended third-party beneficiary of the subcontract;
- **.2** the Subcontractor maintain the insurance coverages as set forth in Article 11, herein;
- **.3** the Subcontractor submit waivers of liens for Work completed by it and by its Sub-subcontractors as a condition precedent to any payment for Work completed;
- **.4** the Subcontractor furnish to the Contractor in a timely fashion all information necessary for the preparation and submission of the reports required by the Contract Documents,
- **.5** the Subcontractor continue to perform under its subcontract in the event the Contractor is terminated and the Owner, at its option, may assume the subcontract;
- **.6** in the event the Subcontractor's performance of the Work is delayed or interfered with by acts of the Owner,

AIA Document A232 – 2019. Copyright © 1992, 2009, and 2019. All rights reserved. "The American Institute of Architects," "American Institute of Architects," "AIA," the AIA Logo, and "AIA Contract Documents" are trademarks of The American Institute of Architects. This draft was produced at 09:51:18 EDT on 06/27/2025 under Subscription No.20250121573 which expires on 04/23/2026, is not for resale, is licensed for one-time use only, and may only be used in accordance with the AIA Contract Documents® Terms of Service. To report copyright violations, e-mail docinfo@aiacontracts.com.
User Notes: (685c3d355a2b85e65d7f4843)

Contractor or other subcontractors, Subcontractor may request an extension of time for the performance of same, as herein provided, but shall not be entitled to any increase in the subcontract price or to damages or additional compensation as a consequence of such delays or interference, except to the extent the prime contract entitled the Contractor to compensation for such delays, and then only to the extent of any amounts that the Contractor may, on behalf of the Subcontractor, recover from the Owner for such delays;

.7 the dispute resolution provisions in Article 15 of this Agreement shall govern all disputes related to the Work; and

.8 no other agreement by Subcontractor in connection with the Work shall contain provisions inconsistent with any of the foregoing Sections (1) through (8) of this Section 5.3.2.

The Contractor shall defend, indemnify and hold harmless the Owner from and against all claims, damages, losses and expenses arising out of or resulting from the Contractor's failure to fulfill the requirements of this Section. In addition, the Owner will have the right to review all subcontracts and reject any which do not comply with the requirements of this Section.

§ 5.4 Contingent Assignment of Subcontracts

§ 5.4.1 Each subcontract agreement for a portion of the Work is assigned by the Contractor to the Owner, provided that

.1 assignment is effective only after termination of the Contract by the Owner and only for those subcontract agreements that the Owner accepts by notifying the Subcontractor and Contractor; and

.2 assignment is subject to the prior rights of the surety, if any, obligated under bond relating to the Contract.

When the Owner accepts the assignment of a subcontract agreement, the Owner assumes the Contractor's rights and obligations under the subcontract.

§ 5.4.2 Upon such assignment, if the Work has been suspended for more than 30 days, the Subcontractor's compensation shall be equitably adjusted for increases in cost resulting from the suspension. Notwithstanding the foregoing, the Subcontractor shall not be entitled to any equitable adjustment if the Subcontractor is solely, partially, or concurrently responsible for the suspension of the Work or any delay to the Project Schedule.

§ 5.4.3 Upon assignment to the Owner under this Section 5.4, the Owner may further assign the subcontract to a successor Contractor or other entity. If the Owner assigns the subcontract to a successor Contractor or other entity, the Owner shall nevertheless remain legally responsible for all of the successor Contractor's obligations under the subcontract.

ARTICLE 6 CONSTRUCTION BY OWNER OR BY SEPARATE CONTRACTORS

§ 6.1 Owner's Right to Perform Construction with Own Forces and to Award Other Contracts

§ 6.1.1 The Owner reserves the right to perform construction or operations related to the Project with the Owner's own forces, and with Separate Contractors retained under Conditions of the Contract substantially similar to those of this Contract, including those provisions of the Conditions of the Contract related to insurance and waiver of subrogation.

§ 6.1.2 When the Owner performs construction or operations with the Owner's own forces or Separate Contractors, the Owner shall provide for coordination of such forces and Separate Contractors with the Work of the Contractor, who shall cooperate with them.

§ 6.2 Mutual Responsibility

§ 6.2.1 The Contractor shall afford the Owner's own forces, Separate Contractors, Construction Manager and other Contractors reasonable opportunity for introduction and storage of their materials and equipment and performance of their activities, and shall connect and coordinate the Contractor's construction and operations with theirs as required by the Contract Documents.

§ 6.2.2 If part of the Contractor's Work depends for proper execution or results upon construction or operations by the Owner's own forces, Separate Contractors or other Contractors, the Contractor shall, prior to proceeding with that portion of the Work, promptly notify the Construction Manager and Architect of apparent discrepancies or defects in the construction or operations by the Owner or Separate Contractor or other Contractors that would render it unsuitable for proper execution and results of the Contractor's Work. Failure of the Contractor to notify the Construction Manager and the Architect of apparent discrepancies or defects prior to proceeding with the Work shall constitute an

AIA Document A232 – 2019. Copyright © 1992, 2009, and 2019. All rights reserved. "The American Institute of Architects," "American Institute of Architects," "AIA," the AIA Logo, and "AIA Contract Documents" are trademarks of The American Institute of Architects. This draft was produced at 09:51:18 EDT on 06/27/2025 under Subscription No.20250121573 which expires on 04/23/2026, is not for resale, is licensed for one-time use only, and may only be used in accordance with the AIA Contract Documents® Terms of Service. To report copyright violations, e-mail docinfo@aiacontracts.com.
User Notes: (685c3d355a2b85e65d7f4843)

DRAFT

acknowledgment that the Owner's or Separate Contractor's or other Contractors' completed or partially completed construction is fit and proper to receive the Contractor's Work. The Contractor shall not be responsible for discrepancies or defects in the construction or operations by the Owner or Separate Contractors or other Contractors that are not apparent.

§ 6.2.3 The Contractor shall reimburse the Owner for costs the Owner incurs, including costs that are payable to Separate Contractors, other Contractors, the Architect, the Construction Manager or any other party to which the Owner may be liable, because of the Contractor's delays, improperly timed activities or defective construction. The Owner shall be responsible to the Contractor for reasonable and actual costs the Contractor incurs because of delays, improperly timed activities, damage to the Work or defective construction by the Owner's own forces, Separate Contractors, or other Contractors.

§ 6.2.4 The Contractor shall promptly remedy damage that the Contractor wrongfully causes to completed or partially completed construction, or to property of the Owner, Separate Contractors, or other Contractors as provided in Section 10.2.5.

§ 6.2.5 The Owner, Separate Contractors, and other Contractors shall have the same responsibilities for cutting and patching as are described for the Contractor in Section 3.14.

§ 6.3 Owner's Right to Clean Up

If a dispute arises among the Contractor, Separate Contractors, other Contractors, and the Owner as to the responsibility under their respective contracts for maintaining the premises and surrounding area free from waste materials and rubbish, the Owner may clean up and allocate the cost among those responsible.

ARTICLE 7 CHANGES IN THE WORK

§ 7.1 General

§ 7.1.1 Changes in the Work may be accomplished after execution of the Contract, and without invalidating the Contract, by Change Order, Construction Change Directive or order for a minor change in the Work, subject to the limitations stated in this Article 7 and elsewhere in the Contract Documents. Owner may make changes in the Work by altering, adding to or deducting from the Work. The Contract Sum shall not be decreased or increased as a result of changes in the Work, except as expressly provided for in Section 7.3.3 or unless evidenced by a Change Order. All changes in the Work shall be requested and authorized before commencing such changes by use of written Change Order which shall not be deemed authorized and agreed upon until Change Orders have been signed and executed by Owner, Construction Manager, Architect and Contractor. Change Order procedures set forth herein shall be the exclusive means to effect a change in the Work including (without limitation) changes in the Work requiring an adjustment in the Contract Sum or the Contract Time. Refinements of the Drawings and Specifications shall not be considered changes in the Work. In no event shall the Contract Sum be adjusted in connection with any change resulting from any defect in the Work or a correction or replacement that is attributable (or needed as a result of) the fault of Contractor or any Subcontractor, supplier or materialmen.

§ 7.1.2 A Change Order shall be based upon agreement between the Owner and Contractor. A Construction Change Directive does not require agreement by the Contractor. An order for a minor change in the Work may be issued by the Architect as provided in Section 7.4.

§ 7.1.3 Changes in the Work shall be performed under applicable provisions of the Contract Documents. The Contractor shall proceed promptly with changes in the Work, unless otherwise provided in the Change Order, Construction Change Directive, or order for a minor change in the Work.

§ 7.1.4 Except as provided in Section 7.3 and Article 9, a change in the Contract Sum and the Contract Time shall be accomplished only by a Change Order. No course of conduct or dealings between the parties, nor express or implied acceptance of alterations or additions to the Work, and no claim that the Owner has been unjustly enriched by an alteration or addition to the Work, whether or not there is any unjust enrichment to the Work, shall be the basis of any claim for an increase in any amounts due under the Contract Documents or a change in any time period provided in the Contract Documents. The Contractor specifically agrees that if it proceeds on an oral order to change the Work, it shall waive any claim for additional compensation or additional time for such work and the Contractor shall not be excused from compliance with the Contract Documents.

AIA Document A232 – 2019. Copyright © 1992, 2009, and 2019. All rights reserved. "The American Institute of Architects," "American Institute of Architects," "AIA," the AIA Logo, and "AIA Contract Documents" are trademarks of The American Institute of Architects. This draft was produced at 09:51:18 EDT on 06/27/2025 under Subscription No.20250121573 which expires on 04/23/2026, is not for resale, is licensed for one-time use only, and may only be used in accordance with the AIA Contract Documents® Terms of Service. To report copyright violations, e-mail docinfo@aiacontracts.com.
User Notes: (685c3d355a2b85e65d7f4843)

§ 7.2 Change Orders

§ 7.2.1 A Change Order is a written instrument prepared by the Construction Manager and signed by the Owner, Construction Manager, Architect, and Contractor, stating their agreement upon all of the following:

- **.1** The change in the Work;
- **.2** The amount of the adjustment, if any, in the Contract Sum; and
- **.3** The extent of the adjustment, if any, in the Contract Time.

§ 7.2.2 Methods used in determining adjustments to the Contract Sum may include those listed in Section 7.3.3.

§ 7.2.3 Change Orders shall be executed on modified AIA Form G701/CMa.

§ 7.2.4 The Contractor's signature on a Change Order shall constitute a full, final, and complete waiver and settlement of any and all claims, demands, and causes of action that Contractor has, or may have in the future, arising out of or relating to the Change Order and the occurrences, acts, omissions, or events upon which the Change Order is based. No "reservation of rights" or other attempt by Contractor to preserve, notwithstanding Contractor's signature on the Change Order, present or future claims arising out of or relating to the Change Order (or arising out of or relating to the cumulative effect of the Change Order in combination with other change orders) shall be effective unless Owner and Contractor shall both agree, in a separate writing signed by both parties contemporaneously with Contractor's execution of the Change Order, to the specific terms, conditions, scope, and duration of such reservation of rights.

§ 7.3 Construction Change Directives

§ 7.3.1 A Construction Change Directive is a written order prepared by the Construction Manager or Owner and signed by the Owner, directing a change in the Work prior to agreement on adjustment, if any, in the Contract Sum or Contract Time, or both. The Owner may by Construction Change Directive, without invalidating the Contract, order changes in the Work within the general scope of the Contract consisting of additions, deletions, or other revisions, the Contract Sum and Contract Time being adjusted accordingly.

§ 7.3.2 A Construction Change Directive shall be used in the absence of total agreement on the terms of a Change Order.

§ 7.3.3 If the Construction Change Directive provides for an adjustment to the Contract Sum, the adjustment shall be based on one or a combination of the following methods:

- **.1** Mutual acceptance of a lump sum properly itemized and supported by sufficient substantiating data to permit evaluation;
- **.2** Unit prices stated in the Contract Documents or subsequently agreed upon;
- **.3** Cost to be determined in a manner agreed upon by the parties and a mutually acceptable fixed or percentage fee; or
- **.4** As provided in Section 7.3.4.

§ 7.3.4 If the Contractor does not respond promptly or disagrees with the method for adjustment in the Contract Sum, the Construction Manager shall determine the adjustment on the basis of reasonable expenditures and savings of those performing the Work attributable to the change, including, in case of an increase in the Contract Sum, an amount for overhead and profit as set forth in the Agreement, or if no such amount is set forth in the Agreement, a reasonable amount. In such case, and also under Section 7.3.3.3, the Contractor shall keep and present, in such form as the Construction Manager may prescribe, an itemized accounting together with appropriate supporting data. Unless otherwise provided in the Contract Documents, costs for the purposes of this Section 7.3.4 shall be limited to the following:

§ 7.3.4.1 The actual and reasonable costs incurred in the performance of the Work supported by invoices, including the following maximum allowances for overhead, supervision and profit. The actual costs shall be limited as follows:

- **.1** wages paid for labor in the direct employ of Contractor in the performance of the Work in the field or in the fabrication shop under applicable collective bargaining agreements or under a salary or wage schedule prevailing in the area plus a markup to cover all overhead items applicable to payroll, such as insurance, taxes, F.I.C.A., workers' compensation, unemployment taxes, and union benefits;

AIA Document A232 – 2019. Copyright © 1992, 2009, and 2019. All rights reserved. "The American Institute of Architects," "American Institute of Architects," "AIA," the AIA Logo, and "AIA Contract Documents" are trademarks of The American Institute of Architects. This draft was produced at 09:51:18 EDT on 06/27/2025 under Subscription No.20250121573 which expires on 04/23/2026, is not for resale, is licensed for one-time use only, and may only be used in accordance with the AIA Contract Documents® Terms of Service. To report copyright violations, e-mail docinfo@aiacontracts.com.
User Notes: (685c3d355a2b85e65d7f4843)

.2 cost of materials, supplies and equipment incorporated in the Work at Contractor's net cost and out of stock unit values and equipment at net cost FOB Project Site;

.3 cost, including maintenance, of all materials, supplies, equipment and temporary facilities, which are consumed in the performance of the changed Work, and cost less salvage value on such items used but not consumed which remain the property of the Contractor;

.4 third party rental charges of all necessary machinery and equipment, exclusive of hand tools, used in performing the changed Work, including installation, minor repairs and replacements, dismantling, removal, transportation and delivery costs thereof at rental charges consistent with those prevailing in the area. Total third-party rental charges on machinery or equipment rented under an agreement containing a purchase option clause shall not exceed seventy-five (75%) of the option purchase price. Contractor owned machinery and equipment used on the Project shall be charged at fifty percent (50%) AED Green Book rates. Rental shall only accrue to a maximum of the current market value of the equipment when brought on the Project Site. At that time, the equipment shall become the property of the Owner and rental charges cease. Upon completion of the Work, arrangements may be made to resell the equipment to the Contractor at salvage value;

.5 cost of additional premiums for all bonds and insurance which the Contractor is required by Owner or the Contract Documents to purchase and maintain and which is incurred as a result of performing the changed Work;

.6 permit fees, royalties, damages for infringement of patents and costs of defending suits therefore, and deposits lost for causes other than Contractor's negligence or fault;

.7 cost of "drayage", exclusive of any drayage between shop and Project Site, only when the Contractor must hire an independent trucking firm and driver to perform special drayage services in performance of the changed Work for which Contractor's skills, manpower and vehicles are inadequate. "Drayage" does not include transportation performed or which could have been performed by Contractor's driver or vehicles but for their use on another project;

.8 other costs incurred in the performance of the changed Work if and to the extent approved in writing in advance in writing by Owner; and

.9 reasonable costs of Subcontractors in performing the Changed Work.

§ 7.3.4.2 Actual costs of the changed Work shall exclude the following for the Contractor and any affected Subcontractors:

.1 salaries or other compensation for officers, executives, general managers, project managers, estimators, engineers, timekeepers, surveyors, mechanics, warehouse staff, auditors, accountants, purchasing and contracting agents, draft persons, stenographers, receptionists, and other staff employees, whether or not employed at Contractor's or Subcontractor's principal office, branch office or field office at Project Site;

.2 expenses of principal offices, branch offices, or Project Site field offices, including without limitation the expenses for pick-up trucks, office trailers, storage trailers, rental of office or storage space, telephone, heat, lights, etc. are considered part of overhead;

.3 ownership cost or maintenance expenses for owned and rented equipment, including without limitation all construction equipment, trucks and vehicles, machines and all other owned equipment, required for performance of the changed Work;

.4 cost for purchase and maintenance of tools and major repairs to rental equipment, materials, supplies and facilities not consumed during construction or incorporated in the changed Work;

.5 capital expense, including interest on capital employed for the changed Work;

.6 overhead or general expenses of any kind, including but not limited to office or fabrication shop overhead or drafting and printing costs;

.7 costs due to the negligence of Contractor, Subcontractors, anyone directly or indirectly employed by any of them, or for whose acts any of them may be liable, including but not limited to injury or damage to persons or property, the correction and/or removal of defective or nonconforming Work, disposal of materials and equipment wrongly supplied, or making good damage to property;

.8 cost of items not specifically and expressly included in Section 7.3.4.1; and

.9 cost of "additional supervision" at the Project Site, which is being conducted by the current Project Site staff.

§ 7.3.4.3 The allowance for the combined overhead and profit included in the total cost to the Owner shall be based on the following schedule:

AIA Document A232 – 2019. Copyright © 1992, 2009, and 2019. All rights reserved. "The American Institute of Architects," "American Institute of Architects," "AIA," the AIA Logo, and "AIA Contract Documents" are trademarks of The American Institute of Architects. This draft was produced at 09:51:18 EDT on 06/27/2025 under Subscription No.20250121573 which expires on 04/23/2026, is not for resale, is licensed for one-time use only, and may only be used in accordance with the AIA Contract Documents® Terms of Service. To report copyright violations, e-mail docinfo@aiacontracts.com.
User Notes: (685c3d355a2b85e65d7f4843)

.1 For the Contractor, for work performed by Contractor's own forces, ten percent (10%) of the cost.

.2 For the Contractor, for work performed by Contractor's Subcontractor, five percent (5%) of the amount due to the Subcontractor.

.3 For each Subcontractor or Sub-subcontractor involved, for work performed by the Subcontractor's or Sub-subcontractor's own forces, five percent (5%) of the cost.

.4 For each Subcontractor, for work performed by the Subcontractor's Sub-subcontractors, five percent (5%) of the amount due the Sub-subcontractor.

.5 Costs to which overhead and profit are to be applied shall be determined in accordance with Section 7.3.4.1.

.6 In order to facilitate checking quotations for extras or credits, all proposals, except where waived by the Owner, shall be accompanied by a complete itemization of costs including labor, materials and subcontracts. Labor and materials shall be itemized in the manner prescribed above. Where major cost items are subcontracts, they shall be itemized also.

§ 7.3.5 If the Contractor disagrees with the adjustment in the Contract Time, the Contractor may make a Claim in accordance with applicable provisions of Article 15.

§ 7.3.6 Upon receipt of a Construction Change Directive, the Contractor shall promptly proceed with the change in the Work involved and advise the Construction Manager and Owner of the Contractor's agreement or disagreement with the method, if any, provided in the Construction Change Directive for determining the proposed adjustment in the Contract Sum or Contract Time.

§ 7.3.7 A Construction Change Directive signed by the Contractor indicates the Contractor's agreement therewith, including adjustment in Contract Sum and Contract Time or the method for determining them. Such agreement shall be effective immediately and shall be recorded as a Change Order.

§ 7.3.8 The amount of credit to be allowed by the Contractor to the Owner for a deletion or change that results in a net decrease in the Contract Sum shall be actual net cost as confirmed by the Construction Manager and Architect. When both additions and credits covering related Work or substitutions are involved in a change, the allowance for overhead and profit shall be figured on the basis of net increase, if any, with respect to that change.

§ 7.3.9 Pending final determination of the total cost of a Construction Change Directive to the Owner, the Contractor may request payment for Work completed under the Construction Change Directive in Applications for Payment. The Construction Manager and Architect will make an interim determination for purposes of monthly certification for payment for those costs and certify for payment the amount that the Construction Manager and Architect determine to be reasonably justified. The interim determination of cost shall adjust the Contract Sum on the same basis as a Change Order, subject to the right of either party to disagree and assert a Claim in accordance with Article 15.

§ 7.3.10 When the Owner and Contractor agree with a determination made by the Construction Manager and Architect concerning the adjustments in the Contract Sum and Contract Time, or otherwise reach agreement upon the adjustments, such agreement shall be effective immediately and the Construction Manager shall prepare a Change Order. Change Orders may be issued for all or any part of a Construction Change Directive.

§ 7.3.11 The Owner, or its designees, shall have the right to examine, inspect, copy and audit the books and records of Contractor and any Subcontractor with respect to all changed Work to be compensated on a cost reimbursable basis in order to verify the accuracy, correctness, completeness and propriety of all costs and allowances allowed.

§ 7.4 Minor Changes in the Work

The Architect may order minor changes in the Work that are consistent with the intent of the Contract Documents and do not involve an adjustment in the Contract Sum or an extension of the Contract Time. The Architect's order for minor changes shall be in writing. If the Contractor believes that the proposed minor change in the Work will affect the Contract Sum or Contract Time, the Contractor shall notify the Construction Manager and shall not proceed to implement the change in the Work. If the Contractor performs the Work set forth in the Architect's order for a minor change without prior notice to the Construction Manager that such change will affect the Contract Sum or Contract Time, the Contractor waives any adjustment to the Contract Sum or extension of the Contract Time.

AIA Document A232 – 2019. Copyright © 1992, 2009, and 2019. All rights reserved. "The American Institute of Architects," "American Institute of Architects," "AIA," the AIA Logo, and "AIA Contract Documents" are trademarks of The American Institute of Architects. This draft was produced at 09:51:18 EDT on 06/27/2025 under Subscription No.20250121573 which expires on 04/23/2026, is not for resale, is licensed for one-time use only, and may only be used in accordance with the AIA Contract Documents® Terms of Service. To report copyright violations, e-mail docinfo@aiacontracts.com.
User Notes: (685c3d355a2b85e65d7f4843)

ARTICLE 8 TIME

§ 8.1 Definitions

§ 8.1.1 Unless otherwise provided, Contract Time is the period of time, including authorized adjustments, allotted in the Contract Documents for Substantial Completion of the Work.

§ 8.1.2 The date of commencement of the Work is the date established in the Agreement.

§ 8.1.3 The date of Substantial Completion is the date certified by the Architect in accordance with Section 9.8.

§ 8.1.4 The term "day" as used in the Contract Documents shall mean calendar day unless otherwise specifically defined.

§ 8.2 Progress and Completion

§ 8.2.1 Time limits stated in the Contract Documents are of the essence of the Contract. By executing the Agreement, the Contractor confirms that the Contract Time is a reasonable period for performing the Work.

§ 8.2.2 The Contractor shall not knowingly, except by agreement or instruction of the Owner in writing, commence the Work prior to the effective date of insurance required to be furnished by the Contractor and Owner.

§ 8.2.3 The Contractor shall proceed expeditiously with adequate forces and shall achieve Substantial Completion and Final Completion within the Contract Time.

§ 8.2.4 All Work shall be completed in sufficient time to allow for clean-up prior to the date of Substantial Completion of the Work.

§ 8.3 Delays and Extensions of Time

§ 8.3.1 If the Contractor is materially delayed at any time in the commencement or progress of the Work by (1) an act or neglect of the Owner, Architect, Construction Manager, or an employee of any of them, or of the Owner's own forces, Separate Contractors, or other Contractors; (2) by changes ordered in the Work; (3) by labor disputes, fire, unusual delay in deliveries, unavoidable casualties, adverse weather conditions documented in accordance with Section 15.1.6.2, or other causes beyond the Contractor's control; (4) by delay authorized by the Owner pending mediation and binding dispute resolution; or (5) by other causes that the Contractor asserts and the Architect, based on the recommendation of the Construction Manager, determines justify delay, then the Contract Time shall be extended for such reasonable time as the Architect may determine.

§ 8.3.2 Claims relating to time shall be made in accordance with applicable provisions of Article 15.

§ 8.3.3 If critical path operation or operations (as defined in .1 below) of the Contractor is delayed or accelerated by an Unavoidable Delay (as defined in .2 below), then subject to the conditions set forth in .1 through .7 below, the Contract Time shall be extended by the time determined by the Owner to be sufficient to compensate for the delay, after consultation with the Architect.

.1 "Critical path operation or operations" shall mean any element of the Work considered at the time by the Owner, after consultation with the Architect, as one which, if delayed, disrupted or accelerated will adversely affect the time of achievement of Substantial or Final Completion of the Project or otherwise impacts the critical path of the Project Schedule. Critical path operation or operations shall be determined from such factors as Contractor's Construction Schedule, the nature of the Work being performed, the Contract Documents, such other information as may be timely submitted by Contractor, and the Contract completion dates.

.2 "Unavoidable Delay" shall mean the act, neglect or default of Architect or Owner or any other contractor employed by Owner, force majeure, physical damage to the Project through no fault of the Contractor, unusually severe weather conditions that could not reasonably be anticipated and any other event or occurrence beyond the reasonable control of Contractor or its Subcontractors or suppliers at any tier. The determination of whether a claimed delay is an Unavoidable Delay, and if so, its effect on completion and the time extension to be granted, shall be made by the Owner after consultation with the Architect.

.3 "Non-Excusable Delay" shall mean delays caused by or attributable to Contractor, its Subcontractors, Sub-

AIA Document A232 – 2019. Copyright © 1992, 2009, and 2019. All rights reserved. "The American Institute of Architects," "American Institute of Architects," "AIA," the AIA Logo, and "AIA Contract Documents" are trademarks of The American Institute of Architects. This draft was produced at 09:51:18 EDT on 06/27/2025 under Subscription No.20250121573 which expires on 04/23/2026, is not for resale, is licensed for one-time use only, and may only be used in accordance with the AIA Contract Documents® Terms of Service. To report copyright violations, e-mail docinfo@aiacontracts.com.
User Notes: (685c3d355a2b85e65d7f4843)

subcontractors, or suppliers or caused by or attributable to Anticipated Conditions (as defined and further explained in Section 8.4 herein). No time extension shall be granted for a Non-Excusable Delay. Examples of such Non-Excusable Delays include but are not limited to Contractor's poor planning, slow mobilization, failure to provide sufficient workers or adequate equipment, failure to procure necessary materials, failure to coordinate or supervise the Work, poor workmanship, accidents, or inadequate financial or other resources.

.4 An extension of time shall not be granted for an Unavoidable Delay unless the Contractor gives written notice to the Owner, with a copy to the Architect, of the claimed delay within ten (10) business days of its commencement and requests, in the written notification, the extension of time that it seeks. Owner and Architect may require Contractor to document the impact and duration of an excusable event and to demonstrate that all reasonable means have been used to minimize the effect of the delay as a condition to the granting of an extension of time.

.5 If in the opinion of the Owner or Architect, the Contractor is not proceeding with the prosecution of the Work as scheduled, and such failure to proceed is due to the act, omission or negligence of Contractor, or Subcontractor, Sub-subcontractor or any materialman or supplier, or the employees or agents of any of the above, upon receipt of written notice and failure to remedy the delay within ten (10) business days, Contractor shall, immediately and at no additional cost, work such overtime, additional shifts, Sundays or holidays as may be required to correct said delays and to ensure no further delays to the completion of the Work.

.6 If the Work, Substantial Completion or Final Completion is delayed by Unavoidable Delays, the Contractor's sole remedy shall be an extension of time equal to the actual delay to Contractor's Work.

.7 If an Unavoidable Delay and Non-Excusable Delay are concurrent, the delay shall be treated as a Non-Excusable Delay.

§ 8.3.4 Nothing in the Contract Documents, including anything contained in this Section 8.3, shall preclude the Owner's recovery of damages for Non-Excusable Delays, including without limitation the cost of Architect and Owner's Representative's additional services that are incurred as a result thereof.

§ 8.4 Anticipated Conditions and Escalation

Notwithstanding anything contained in the Contract Documents to the contrary, Contractor acknowledges that (i) the Contract Sum and Contract Time were agreed upon based on its evaluation of the Work and Project, including any potential issues and conditions that may arise during the time that Contractor is performing the Work and (ii) the Contract Sum and Contract Time include amounts for delay, supply chain disruptions, material cost escalations and other effects directly or indirectly resulting from known or reasonably foreseeable conditions, including, but not limited to, current supply chain and market conditions whether existing as of the date of this Contract or reasonably foreseeable to a prudent general contractor as of the date of this Agreement (collectively, the "Anticipated Conditions"). Contractor agrees that it shall not be entitled to a change in the Contract Sum and/or Contract Time from the Owner arising from or in connection with any Anticipated Conditions unless Owner approves the same in accordance with the terms and conditions of the Contract Documents. Contractor acknowledges the Contract Sum anticipates all potential material cost escalations which may occur prior to Substantial Completion and, accordingly, Contractor agrees it is not entitled to any increase in Contract Sum for such price escalation but may be entitled to extension of the Contract Time if not the result of Anticipated Conditions.

ARTICLE 9 PAYMENTS AND COMPLETION

§ 9.1 Contract Sum

§ 9.1.1 The Contract Sum is stated in the Agreement and, including authorized adjustments, is the total amount payable by the Owner to the Contractor for performance of the Work under the Contract Documents.

§ 9.1.2 If unit prices are stated in the Contract Documents or subsequently agreed upon, and if quantities originally contemplated are materially changed so that application of such unit prices to the actual quantities causes substantial inequity to the Owner or Contractor, the applicable unit prices shall be equitably adjusted.

§ 9.2 Schedule of Values

Where the Contract is based on a stipulated sum or Guaranteed Maximum Price, the Contractor shall submit a schedule of values to the Construction Manager and Owner, before the first Application for Payment, allocating the entire Contract Sum to the various portions of the Work. The schedule of values shall be prepared in the form, and supported by the data to substantiate its accuracy, required by the Construction Manager and the Architect. This schedule, unless objected to by the Construction Manager or Architect, shall be used as a basis for reviewing the Contractor's

AIA Document A232 – 2019. Copyright © 1992, 2009, and 2019. All rights reserved. "The American Institute of Architects," "American Institute of Architects," "AIA," the AIA Logo, and "AIA Contract Documents" are trademarks of The American Institute of Architects. This draft was produced at 09:51:18 EDT on 06/27/2025 under Subscription No.20250121573 which expires on 04/23/2026, is not for resale, is licensed for one-time use only, and may only be used in accordance with the AIA Contract Documents® Terms of Service. To report copyright violations, e-mail docinfo@aiacontracts.com.
User Notes: (685c3d355a2b85e65d7f4843)

Applications for Payment. The Construction Manager shall forward to the Architect the Contractor's schedule of values. Any changes to the schedule of values shall be submitted to the Construction Manager and supported by such data to substantiate its accuracy as the Construction Manager and the Architect may require, and unless objected to by the Construction Manager or the Architect, shall be used as a basis for reviewing the Contractor's subsequent Applications for Payment. The Schedule of Values and the Application for Payment shall indicate labor and material for each line item with the Contractor's fee listed separately.

§ 9.3 Applications for Payment

§ 9.3.1 At least fifteen days before the date established for each progress payment, the Contractor shall submit to the Construction Manager an itemized Application for Payment prepared in accordance with the schedule of values, if required under Section 9.2, for completed portions of the Work. The application shall be notarized, if required, and supported by all data substantiating the Contractor's right to payment that the Owner, Construction Manager or Architect require, such as copies of requisitions, and releases of waivers of lien from Subcontractors and suppliers, and shall reflect retainage if provided for in the Contract Documents.

§ 9.3.1.1 As provided in Section 7.3.9, such applications may include requests for payment on account of changes in the Work that have been properly authorized by Construction Change Directives, or by interim determinations of the Construction Manager and Architect, but not yet included in Change Orders.

§ 9.3.1.2 Applications for Payment shall not include requests for payment for portions of the Work for which the Contractor does not intend to pay a Subcontractor or supplier, unless such Work has been performed by others whom the Contractor intends to pay.

§ 9.3.1.3 Neither final acceptance of the Work, nor payment therefore, nor any provision in the Contract Documents shall relieve Contractor of responsibility for defective or deficient materials or workmanship.

§ 9.3.2 Unless otherwise provided in the Contract Documents, payments shall be made on account of materials and equipment delivered and suitably stored at the Project site for subsequent incorporation in the Work. If approved in advance by the Owner, payment may similarly be made for materials and equipment suitably stored off the site at a location agreed upon in writing. Payment for materials and equipment stored on or off the site shall be conditioned upon compliance by the Contractor with procedures satisfactory to the Owner to establish the Owner's title to such materials and equipment or otherwise protect the Owner's interest, and shall include the costs of applicable insurance, storage, and transportation to the site, for such materials and equipment stored off the site. The Contractor shall notify the Owner and Construction Manager in writing of the location of any off-site storage. The Owner, Construction Manager and Architect shall have the right to visit the off-site storage location and to inspect the items stored there. The Contractor's insurance policies required hereunder shall include all equipment and materials stored off site. The Contractor shall provide the Owner and Construction Manager with written proof, reasonably satisfactory to the Owner, that title to the materials and equipment stored off site are vested in the Owner, that the materials are properly labeled as belonging to the Project, and the materials are segregated from other materials at the storage location.

§ 9.3.3 The Contractor warrants that title to all Work covered by an Application for Payment will pass to the Owner no later than the time of payment. The Contractor further warrants that upon submittal of an Application for Payment all Work for which Certificates for Payment have been previously issued and payments received from the Owner shall, to the best of the Contractor's knowledge, information, and belief, be free and clear of liens, claims, security interests, or encumbrances, in favor of the Contractor, Subcontractors, suppliers, or other persons or entities that provided labor, materials and equipment relating to the Work.

§ 9.3.4 Included with each monthly Application for Payment, Contractor shall submit statements and waivers of lien covering all portions of the Work for which disbursement is requested to a date specified therein and covering all Work to a reasonably current date, all in compliance with the Mechanic's Lien Laws of the State where the Project is located and with the requirements of Owner and any financing requirements of the Project, together with invoices and other supporting data, including but not limited to statements and waivers of lien from all lower tier subcontractors, sub-subcontractors and material suppliers invoicing an amount in excess of $10,000.00, as Owner or Architect or any Project lender or title insurance company may require to satisfy each that all monies due any person or party are known and paid, and that any lien or claim for the Work to such date is waived or released, and that the Project remains lien free and claim free.

AIA Document A232 – 2019. Copyright © 1992, 2009, and 2019. All rights reserved. "The American Institute of Architects," "American Institute of Architects," "AIA," the AIA Logo, and "AIA Contract Documents" are trademarks of The American Institute of Architects. This draft was produced at 09:51:18 EDT on 06/27/2025 under Subscription No.20250121573 which expires on 04/23/2026, is not for resale, is licensed for one-time use only, and may only be used in accordance with the AIA Contract Documents® Terms of Service. To report copyright violations, e-mail docinfo@aiacontracts.com.
User Notes: (685c3d355a2b85e65d7f4843)

§ 9.3.5 If the Owner has made all payments to the Contractor due in accordance with the Agreement, Contractor shall hold Owner harmless from and against all liens, claims of liens, and notices of personal liability for materials, equipment, labor, and other costs, or any of them, filed against the Work or the site of the Project, or any part thereof, and from and against all expenses and liability in connection therewith including, but not limited to, the court costs and attorneys' fees resulting or arising therefrom. Should any such liens or notices be received by Owner or filed of record, Contractor shall promptly, but no more than fourteen (14) days after Contractor acquires notice or knowledge of the lien, pay or discharge the same and cause the same to be released of record, or shall furnish Owner with appropriate bond in the form and amount satisfactory to Owner. Assuming the Owner is current in its payments to the Contractor, yet the Contractor fails to promptly pay or discharge such lien or notice, the Owner shall have the right to retain an additional amount from any payment then or thereafter due Contractor sufficient to satisfy and defend such lien or notice, including all attorneys' fees and expenses, and the Contract Sum shall be reduced by such amount. If the remaining portion of the Contract Sum not yet paid to the Contractor is insufficient to satisfy and defend such lien or notice, the Contractor shall be liable for and shall immediately reimburse the Owner for such amounts, including all attorneys' fees and expenses. The obligations of the Contractor and the rights of the Owner under this paragraph are subject to and conditioned upon the Owner having made payment to the Contractor as required under the Contract Documents.

§ 9.4 Certificates for Payment

§ 9.4.1 Where there is only one Contractor, the Construction Manager will, within seven days after the Construction Manager's receipt of the Contractor's Application for Payment, review the Application, certify the amount the Construction Manager determines is due the Contractor, and forward the Contractor's Application and Certificate for Payment to the Architect. Within seven days after the Architect receives the Contractor's Application for Payment from the Construction Manager, the Architect will either (1) issue to the Owner a Certificate for Payment, in the full amount of the Application for Payment, with a copy to the Construction Manager; or (2) issue to the Owner a Certificate for Payment for such amount as the Architect determines is properly due, and notify the Construction Manager and Owner of the Architect's reasons for withholding certification in part as provided in Section 9.5.1; or (3) withhold certification of the entire Application for Payment, and notify the Construction Manager and Owner of the Architect's reason for withholding certification in whole as provided in Section 9.5.1. The Construction Manager will promptly forward to the Contractor the Architect's notice of withholding certification.

§ 9.4.2 Where there is more than one Contractor performing portions of the Project, the Construction Manager will, within seven days after the Construction Manager receives all of the Contractors' Applications for Payment: (1) review the Applications and certify the amount the Construction Manager determines is due each of the Contractors; (2) prepare a Summary of Contractors' Applications for Payment by combining information from each Contractor's application with information from similar applications for progress payments from the other Contractors; (3) prepare a Project Application and Certificate for Payment; (4) certify the amount the Construction Manager determines is due all Contractors; and (5) forward the Summary of Contractors' Applications for Payment and Project Application and Certificate for Payment to the Architect.

§ 9.4.2.1 Within seven days after the Architect receives the Project Application and Project Certificate for Payment and the Summary of Contractors' Applications for Payment from the Construction Manager, the Architect will either (1) issue to the Owner a Project Certificate for Payment, with a copy to the Construction Manager; or (2) issue to the Owner a Project Certificate for Payment for such amount as the Architect determines is properly due, and notify the Construction Manager and Owner of the Architect's reasons for withholding certification in part as provided in Section 9.5.1; or (3) withhold certification of the entire Project Application for Payment, and notify the Construction Manager and Owner of the Architect's reason for withholding certification in whole as provided in Section 9.5.1. The Construction Manager will promptly forward the Architect's notice of withholding certification to the Contractors.

§ 9.4.3 The Construction Manager's certification of an Application for Payment or, in the case of more than one Contractor, a Project Application and Certificate for Payment, shall be based upon the Construction Manager's evaluation of the Work and the data in the Application or Applications for Payment. The Construction Manager's certification will constitute a representation that, to the best of the Construction Manager's knowledge, information, and belief, the Work has progressed to the point indicated, the quality of the Work is in accordance with the Contract Documents, and that the Contractor is, or Contractors are, entitled to payment in the amount certified.

§ 9.4.4 The Architect's issuance of a Certificate for Payment or, in the case of more than one Contractor, Project Application and Certificate for Payment, shall be based upon the Architect's evaluation of the Work, the

AIA Document A232 – 2019. Copyright © 1992, 2009, and 2019. All rights reserved. "The American Institute of Architects," "American Institute of Architects," "AIA," the AIA Logo, and "AIA Contract Documents" are trademarks of The American Institute of Architects. This draft was produced at 09:51:18 EDT on 06/27/2025 under Subscription No.20250121573 which expires on 04/23/2026, is not for resale, is licensed for one-time use only, and may only be used in accordance with the AIA Contract Documents® Terms of Service. To report copyright violations, e-mail docinfo@aiacontracts.com.
User Notes: (685c3d355a2b85e65d7f4843)

recommendation of the Construction Manager, and data in the Application for Payment or Project Application for Payment. The Architect's certification will constitute a representation that, to the best of the Architect's knowledge, information, and belief, the Work has progressed to the point indicated, the quality of the Work is in accordance with the Contract Documents, and that the Contractor is, or Contractors are, entitled to payment in the amount certified.

§ 9.4.5 The representations made pursuant to Sections 9.4.3 and 9.4.4 are subject to an evaluation of the Work for conformance with the Contract Documents upon Substantial Completion, to results of subsequent tests and inspections, to correction of minor deviations from the Contract Documents prior to completion, and to specific qualifications expressed by the Construction Manager or Architect.

§ 9.4.6 The issuance of a Certificate for Payment or a Project Certificate for Payment will not be a representation that the Construction Manager or Architect has (1) made exhaustive or continuous on-site inspections to check the quality or quantity of the Work; (2) reviewed construction means, methods, techniques, sequences, or procedures; (3) reviewed copies of requisitions received from Subcontractors and suppliers and other data requested by the Owner to substantiate the Contractor's right to payment; or (4) made examination to ascertain how or for what purpose the Contractor has used money previously paid on account of the Contract Sum.

§ 9.5 Decisions to Withhold Certification

§ 9.5.1 The Construction Manager or Architect may withhold a Certificate for Payment or Project Certificate for Payment in whole or in part, to the extent reasonably necessary to protect the Owner, if in the Construction Manager's or Architect's opinion the representations to the Owner required by Section 9.4.3 and 9.4.4 cannot be made. If the Construction Manager or Architect is unable to certify payment in the amount of the Application, the Construction Manager will notify the Contractor and Owner as provided in Section 9.4.1 and 9.4.2. If the Contractor, Construction Manager and Architect cannot agree on a revised amount, the Architect will promptly issue a Certificate for Payment or a Project Certificate for Payment for the amount for which the Architect is able to make such representations to the Owner. The Construction Manager or Architect may also withhold a Certificate for Payment or, because of subsequently discovered evidence, may nullify the whole or a part of a Certificate for Payment or Project Certificate for Payment previously issued, to such extent as may be necessary in the Construction Manager's or Architect's opinion to protect the Owner from loss for which the Contractor is responsible, including loss resulting from the acts and omissions described in Section 3.3.2 because of

- **.1** damaged or defective Work not remedied;
- **.2** third party claims filed or reasonable evidence indicating probable filing of such claims, unless security acceptable to the Owner is provided by the Contractor;
- **.3** failure of the Contractor to make payments properly to Subcontractors or suppliers for labor, materials or equipment;
- **.4** reasonable evidence that the Work cannot be completed for the unpaid balance of the Contract Sum or completed within the Contract Time;
- **.5** damage to the Owner or a Separate Contractor or other Contractor;
- **.6** reasonable evidence that the Work will not be completed within the Contract Time, and that the unpaid balance would not be adequate to cover actual damages for the anticipated delay;
- **.7** repeated failure to carry out the Work in accordance with the Contract Documents;
- **.8** failure of Contractor to submit a Schedule of Values in accordance with the Contract Documents;
- **.9** failure of Contractor to maintain a record of changes on drawings and documents;
- **.10** Contractor's neglect or unsatisfactory prosecution of the Work, including failure to clean up; or
- **.11** failure of Contractor to comply with any provision of the Contract Documents.

§ 9.5.2 The Owner shall not be deemed to be in default of the Contract by reason of withholding payment while any of the foregoing grounds remain uncured. When either party disputes the Architect's decision regarding a Certificate for Payment under Section 9.5.1, in whole or in part, that party may submit a Claim in accordance with Article 15.

§ 9.5.3 When the reasons for withholding certification are removed, certification will be made for amounts previously withheld.

§ 9.5.4 If the Architect or Construction Manager withholds certification for payment under Section 9.5.1, the Owner may, at its sole option, issue joint checks to the Contractor and to any Subcontractor or supplier to whom the Contractor failed to make payment for Work properly performed or material or equipment suitably delivered. If the Owner makes

AIA Document A232 – 2019. Copyright © 1992, 2009, and 2019. All rights reserved. "The American Institute of Architects," "American Institute of Architects," "AIA," the AIA Logo, and "AIA Contract Documents" are trademarks of The American Institute of Architects. This draft was produced at 09:51:18 EDT on 06/27/2025 under Subscription No.20250121573 which expires on 04/23/2026, is not for resale, is licensed for one-time use only, and may only be used in accordance with the AIA Contract Documents® Terms of Service. To report copyright violations, e-mail docinfo@aiacontracts.com.
User Notes: (685c3d355a2b85e65d7f4843)

payments by joint check, the Owner shall notify the Architect and the Construction Manager, and both will reflect such payment on the next Certificate for Payment.

§ 9.6 Progress Payments

§ 9.6.1 After the Architect has issued a Certificate for Payment or Project Certificate for Payment, the Owner shall make payment in the manner and within the time provided in the Contract Documents, and shall so notify the Construction Manager and Architect.

§ 9.6.2 The Contractor shall pay each Subcontractor, no later than seven days after receipt of payment from the Owner, the amount to which the Subcontractor is entitled, reflecting percentages actually retained from payments to the Contractor on account of the Subcontractor's portion of the Work. The Contractor shall, by appropriate agreement with each Subcontractor, require each Subcontractor to make payments to Sub-subcontractors in a similar manner. No Subcontract shall be paid at a rate lower than the rates set forth in Section 9.3.4 of the Agreement being paid to Contractor by the Owner.

§ 9.6.3 The Construction Manager will, on request, furnish to a Subcontractor, if practicable, information regarding percentages of completion or amounts applied for by the Contractor and action taken thereon by the Owner, Construction Manager and Architect on account of portions of the Work done by such Subcontractor.

§ 9.6.4 The Owner has the right to request written evidence from the Contractor that the Contractor has properly paid Subcontractors and suppliers amounts paid by the Owner to the Contractor for subcontracted Work. If the Contractor fails to furnish such evidence within seven days, the Owner shall have the right to contact Subcontractors and suppliers to ascertain whether they have been properly paid. Neither the Owner, Construction Manager nor Architect shall have an obligation to pay, or to see to the payment of money to, a Subcontractor or supplier, except as may otherwise be required by law.

§ 9.6.5 The Contractor's payments to suppliers shall be treated in a manner similar to that provided in Sections 9.6.2, 9.6.3 and 9.6.4.

§ 9.6.6 A Certificate for Payment, a progress payment, or partial or entire use or occupancy of the Project by the Owner shall not constitute acceptance of Work not in accordance with the Contract Documents.

§ 9.6.7 Unless the Contractor provides the Owner with a payment bond in the full penal sum of the Contract Sum, payments received by the Contractor for Work properly performed by Subcontractors or provided by suppliers shall be held by the Contractor for those Subcontractors or suppliers who performed Work or furnished materials, or both, under contract with the Contractor for which payment was made by the Owner. Nothing contained herein shall require money to be placed in a separate account and not commingled with money of the Contractor, create any fiduciary liability or tort liability on the part of the Contractor for breach of trust, or entitle any person or entity to an award of punitive damages against the Contractor for breach of the requirements of this provision.

§ 9.6.8 Provided the Owner has fulfilled its payment obligations under the Contract Documents, the Contractor shall defend and indemnify the Owner from all loss, liability, damage or expense, including reasonable attorney's fees and litigation expenses, arising out of any lien claim or other claim for payment by any Subcontractor or supplier of any tier. Upon receipt of notice of a lien claim or other claim for payment, the Owner shall notify the Contractor. If approved by the applicable court, when required, the Contractor may substitute a surety bond for the property against which the lien or other claim for payment has been asserted.

§ 9.6.9 Notwithstanding any other provision to the contrary, the Owner reserves the right to make payment directly to any Subcontractor of the Contractor (or jointly to the Contractor and Subcontractor) in such amounts as the Owner determines to protect the Owner's interest and the Owner's property from a lien or asserted lien or other claim, and the amount owed the Contractor shall be reduced by the amount of any such payment by the Owner. Exercise of this option shall not create any claims or rights by any Subcontractor or any other party against the Owner or the Owner's funds. This right may also be exercised through the Owner's title company or lender making any such payments.

§ 9.7 Failure of Payment

§ 9.7.1 If the Construction Manager and Architect do not issue a Certificate for Payment or a Project Certificate for

AIA Document A232 – 2019. Copyright © 1992, 2009, and 2019. All rights reserved. "The American Institute of Architects," "American Institute of Architects," "AIA," the AIA Logo, and "AIA Contract Documents" are trademarks of The American Institute of Architects. This draft was produced at 09:51:18 EDT on 06/27/2025 under Subscription No.20250121573 which expires on 04/23/2026, is not for resale, is licensed for one-time use only, and may only be used in accordance with the AIA Contract Documents® Terms of Service. To report copyright violations, e-mail docinfo@aiacontracts.com.
User Notes: (685c3d355a2b85e65d7f4843)

Payment, through no fault of the Contractor, within fourteen days after the Construction Manager's receipt of the Contractor's Application for Payment, or if the Owner does not pay amounts properly due and owing to the Contractor within seven days after the date established in the Contract Documents, the amount certified by the Construction Manager and Architect or awarded by binding dispute resolution, then the Contractor may, upon seven additional days' notice to the Owner, Construction Manager and Architect, stop the Work until payment of the amount owing has been received. The Contract Time shall be extended appropriately.

§ 9.7.2 If the Owner is entitled to reimbursement or payment from the Contractor pursuant to the Contract Documents, the payment shall be made promptly upon demand by the Owner. Notwithstanding anything contained in the Contract Documents to the contrary, if the Contractor fails to promptly make any payment due the Owner, or if the Owner incurs any costs and expenses to cure any default of the Contractor or to correct defective work, the Owner shall have an absolute right to offset such amount against the Contract Sum and may, in the Owner's sole discretion, elect either to (1) deduct an amount equal to that which the Owner is entitled from any payment then or thereafter due the Contractor from the Owner, or (2) issue a written notice to the Contractor reducing the Contract Sum by an amount equal to that which the Owner is entitled.

§ 9.8 Substantial Completion

§ 9.8.1 Substantial Completion is the stage in the progress of the Work when (i) the Work or designated portion thereof is sufficiently complete in accordance with the Contract Documents so the Owner can occupy or utilize the Work for its intended use; (ii) the Punchlist has been prepared pursuant to standard industry practice; (iii) the Architect and Owner have determined that the Work has been substantially completed in accordance with this Contract; and (iv) the Contractor has obtained approval from the local governmental authority permitting occupancy, if applicable.

§ 9.8.2 When the Contractor considers that the Work, or a portion thereof which the Owner agrees to accept separately, is substantially complete, the Contractor shall notify the Construction Manager, and the Contractor and Construction Manager shall jointly prepare and submit to the Architect a comprehensive list of items to be completed or corrected prior to final payment. Failure to include an item on such list does not alter the responsibility of the Contractor to complete all Work in accordance with the Contract Documents.

§ 9.8.3 Upon receipt of the list, the Architect and Owner, assisted by the Construction Manager, will make an inspection to determine whether the Work or designated portion thereof is substantially complete. If the Architect's or Owner's inspection discloses any item, whether or not included on the list, which is not sufficiently complete in accordance with the Contract Documents so that the Owner can occupy or utilize the Work or designated portion thereof for its intended use, the Contractor shall, before issuance of the Certificate of Substantial Completion, complete or correct such item upon notification by the Architect. In such case, the Contractor shall then submit a request for another inspection by the Architect and Owner, assisted by the Construction Manager, to determine Substantial Completion. If after notification by the Contractor that all items of the Substantial Completion list have been completed it becomes necessary for the Architect, Construction Manager or their consultants to make additional trips, due to the Contractor's failure to fully complete or correct the Work, the cost to the Owner for these additional trips will be deducted from the final payment due the Contractor.

§ 9.8.4 When the Architect, assisted by the Construction Manager, determines that the Work of all of the Contractors, or designated portion thereof, is substantially complete, the Construction Manager will prepare, and the Construction Manager and Architect shall execute, a Certificate of Substantial Completion that shall establish the date of Substantial Completion; establish responsibilities of the Owner and Contractor for security, maintenance, heat, utilities, damage to the Work and insurance; and fix the time within which the Contractor shall finish all items on the list accompanying the Certificate. Warranties required by the Contract Documents shall commence on the date of Substantial Completion of the Work or designated portion thereof unless otherwise provided in the Certificate of Substantial Completion.

§ 9.8.5 The Certificate of Substantial Completion shall be submitted to the Owner and Contractor for their written acceptance of responsibilities assigned to them in the Certificate. Upon such acceptance, and consent of surety if any, and if there exists no other reason to withhold retainage, the Owner shall make payment of retainage applying to the Work or designated portion thereof and accrued interest thereon within thirty (30) days of the date of Substantial Completion. Owner may withhold from the retainage payment that amount reasonably necessary to assure final completion of the Work in accordance with the Contract Document requirements. Any retained funds withheld after the date of Substantial Completion and pending final completion of the Work, and interest thereon accrued, shall be paid to Contractor not later than thirty (30) days after the issuance of the Architect's final Certificate for Payment.

AIA Document A232 – 2019. Copyright © 1992, 2009, and 2019. All rights reserved. "The American Institute of Architects," "American Institute of Architects," "AIA," the AIA Logo, and "AIA Contract Documents" are trademarks of The American Institute of Architects. This draft was produced at 09:51:18 EDT on 06/27/2025 under Subscription No.20250121573 which expires on 04/23/2026, is not for resale, is licensed for one-time use only, and may only be used in accordance with the AIA Contract Documents® Terms of Service. To report copyright violations, e-mail docinfo@aiacontracts.com.
User Notes: (685c3d355a2b85e65d7f4843)

§ 9.9 Partial Occupancy or Use

§ 9.9.1 The Owner may occupy or use any completed or partially completed portion of the Work at any stage when such portion is designated by separate agreement with the Contractor, provided such occupancy or use is consented to by the insurer and authorized by public authorities having jurisdiction over the Project. Such partial occupancy or use may commence whether or not the portion is substantially complete, provided the Owner and Contractor have accepted in writing the responsibilities assigned to each of them for payments, retainage if any, security, maintenance, heat, utilities, damage to the Work and insurance, and have agreed in writing concerning the period for correction of the Work and commencement of warranties required by the Contract Documents. When the Contractor considers a portion substantially complete, the Contractor and Construction Manager shall jointly prepare and submit a list to the Architect as provided under Section 9.8.2. Consent of the Contractor to partial occupancy or use shall not be unreasonably withheld. The stage of the progress of the Work shall be determined by written agreement between the Owner and Contractor or, if no agreement is reached, by decision of the Architect after consultation with the Construction Manager.

§ 9.9.2 Immediately prior to such partial occupancy or use, the Owner, Construction Manager, Contractor, and Architect shall jointly inspect the area to be occupied or portion of the Work to be used in order to determine and record the condition of the Work.

§ 9.9.3 Unless otherwise agreed upon, partial occupancy or use of a portion or portions of the Work shall not constitute acceptance of Work not complying with the requirements of the Contract Documents.

§ 9.10 Final Completion and Final Payment

§ 9.10.1 Upon completion of the Work, the Contractor shall forward to the Construction Manager a notice that the Work is ready for final inspection and acceptance, and shall also forward to the Construction Manager a final Contractor's Application for Payment. Upon receipt, the Construction Manager shall perform an inspection to confirm the completion of Work of the Contractor. The Construction Manager shall make recommendations to the Architect when the Work of all of the Contractors is ready for final inspection, and shall then forward the Contractors' notices and Application for Payment or Project Application for Payment, to the Architect, who will promptly make such inspection. When the Architect finds the Work acceptable under the Contract Documents and the Contract fully performed, the Construction Manager and Architect will promptly issue a final Certificate for Payment or Project Certificate for Payment stating that to the best of their knowledge, information and belief, and on the basis of their on-site visits and inspections, the Work has been completed in accordance with the Contract Documents and that the entire balance found to be due the Contractor and noted in the final Certificate is due and payable ("Final Completion"). The Construction Manager's and Architect's final Certificate for Payment or Project Certificate for Payment will constitute a further representation that conditions listed in Section 9.10.2 as precedent to the Contractor's being entitled to final payment have been fulfilled.

§ 9.10.2 Neither final payment nor any remaining retained percentage shall become due until the Contractor submits to the Architect through the Construction Manager and Owner in form and substance reasonably satisfactory to the Owner (1) an affidavit that payrolls, bills for materials and equipment, and other indebtedness connected with the Work for which the Owner or the Owner's property might be responsible or encumbered (less amounts withheld by Owner) have been paid or otherwise satisfied, (2) a certificate evidencing that insurance required by the Contract Documents to remain in force after final payment is currently in effect, (3) a written statement that the Contractor knows of no reason that the insurance will not be renewable to cover the period required by the Contract Documents, (4) consent of surety, if any, to final payment (5) documentation of any special warranties, such as manufacturers' warranties or specific Subcontractor warranties, and (6), if required by the Owner, other data establishing payment or satisfaction of obligations, such as receipts and releases and waivers of liens, claims, security interests, or encumbrances arising out of the Contract, to the extent and in such form as may be designated by the Owner. If a Subcontractor refuses to furnish a release or waiver required by the Owner, the Contractor may furnish a bond satisfactory to the Owner to indemnify the Owner against such lien, claim, security interest, or encumbrance. If a lien, claim, security interest, or encumbrance remains unsatisfied after payments are made, the Contractor shall refund to the Owner all money that the Owner may be compelled to pay in discharging the lien, claim, security interest, or encumbrance, including all costs and reasonable attorneys' fees. In addition, as a condition to final payment, Contractor will submit to Owner (a) all maintenance and operating manuals, (b) a complete set of the as-built drawings, (c) copies of all warranties and guarantees from Subcontractors, suppliers and equipment manufacturers and (d) a complete list of the names, addresses and phone numbers of all Subcontractors and any company providing a warranty or guarantee. Contractor will provide final

AIA Document A232 – 2019. Copyright © 1992, 2009, and 2019. All rights reserved. "The American Institute of Architects," "American Institute of Architects," "AIA," the AIA Logo, and "AIA Contract Documents" are trademarks of The American Institute of Architects. This draft was produced at 09:51:18 EDT on 06/27/2025 under Subscription No.20250121573 which expires on 04/23/2026, is not for resale, is licensed for one-time use only, and may only be used in accordance with the AIA Contract Documents® Terms of Service. To report copyright violations, e-mail docinfo@aiacontracts.com.
User Notes: (685c3d355a2b85e65d7f4843)

unconditional lien waivers from such subcontractors, sub-subcontractors and material suppliers within 21 days of receipt of payment from Owner following final completion of the Project.

§ 9.10.3 If, after Substantial Completion of the Work, final completion thereof is materially delayed through no fault of the Contractor or by issuance of Change Orders affecting final completion, and the Construction Manager and Architect so confirm, the Owner shall, upon application by the Contractor and certification by the Construction Manager and Architect, and without terminating the Contract, make payment of the balance due for that portion of the Work fully completed, corrected, and accepted. If the remaining balance for Work not fully completed or corrected is less than retainage stipulated in the Contract Documents, and if bonds have been furnished, the written consent of the surety to payment of the balance due for that portion of the Work fully completed and accepted shall be submitted by the Contractor to the Architect through the Construction Manager prior to certification of such payment. Such payment shall be made under terms and conditions governing final payment, except that it shall not constitute a waiver of Claims.

§ 9.10.4 Omitted.

§ 9.10.5 Acceptance of final payment by the Contractor, a Subcontractor, or a supplier, shall constitute a waiver of claims by that payee except those previously made in writing and identified by that payee as unsettled at the time of final Application for Payment.

ARTICLE 10 PROTECTION OF PERSONS AND PROPERTY

§ 10.1 Safety Precautions and Programs

The Contractor shall be responsible for initiating, maintaining, and supervising all safety precautions and programs in connection with the performance of the Contract. The Contractor shall submit the Contractor's safety program to the Construction Manager for review and coordination with the safety programs of other Contractors. The Construction Manager's responsibilities for review and coordination of safety programs shall not extend to direct control over or charge of the acts or omissions of the Contractors, Subcontractors, agents or employees of the Contractors or Subcontractors, or any other persons performing portions of the Work and not directly employed by the Construction Manager.

§ 10.2 Safety of Persons and Property

§ 10.2.1 The Contractor shall take reasonable precautions for safety of, and shall provide reasonable protection to prevent damage, injury, or loss to

- **.1** employees on the Work and other persons who may be affected thereby;
- **.2** the Work and materials and equipment to be incorporated therein, whether in storage on or off the site, under care, custody, or control of the Contractor, a Subcontractor, or a Sub-subcontractor;
- **.3** other property at the site or adjacent thereto, such as trees, shrubs, lawns, walks, pavements, roadways, structures, and utilities not designated for removal, relocation, or replacement in the course of construction; and
- **.4** construction or operations by the Owner, Separate Contractors, or other Contractors.

§ 10.2.2 The Contractor shall comply with, and give notices required by applicable laws, statutes, ordinances, codes, rules and regulations, and lawful orders of public authorities, bearing on safety of persons or property or their protection from damage, injury, or loss.

§ 10.2.3 The Contractor shall implement, erect, and maintain, as required by existing conditions and performance of the Contract, reasonable safeguards for safety and protection, including posting danger signs and other warnings against hazards; promulgating safety regulations; and notifying the owners and users of adjacent sites and utilities of the safeguards.

§ 10.2.4 When use or storage of explosives or other hazardous materials or equipment or unusual methods are necessary for execution of the Work, the Contractor shall exercise utmost care and carry on such activities under supervision of properly qualified personnel and give the Owner reasonable advance notice, and shall not commence, use, or store until authorized in writing by the Owner.

§ 10.2.5 The Contractor shall promptly remedy damage and loss (other than damage or loss insured under property

AIA Document A232 – 2019. Copyright © 1992, 2009, and 2019. All rights reserved. "The American Institute of Architects," "American Institute of Architects," "AIA," the AIA Logo, and "AIA Contract Documents" are trademarks of The American Institute of Architects. This draft was produced at 09:51:18 EDT on 06/27/2025 under Subscription No.20250121573 which expires on 04/23/2026, is not for resale, is licensed for one-time use only, and may only be used in accordance with the AIA Contract Documents® Terms of Service. To report copyright violations, e-mail docinfo@aiacontracts.com.
User Notes: (685c3d355a2b85e65d7f4843)

insurance required by the Contract Documents) to property referred to in Sections 10.2.1.2, 10.2.1.3 and 10.2.1.4 caused in whole or in part by the Contractor, a Subcontractor, a Sub-subcontractor, or anyone directly or indirectly employed by any of them, or by anyone for whose acts they may be liable and for which the Contractor is responsible under Sections 10.2.1.2, 10.2.1.3 and 10.2.1.4. The Contractor may make a Claim for the cost to remedy the damage or loss to the extent such damage or loss is attributable to acts or omissions of the Owner, Construction Manager or Architect or anyone directly or indirectly employed by any of them, or by anyone for whose acts any of them may be liable, and not attributable to the fault or negligence of the Contractor. The foregoing obligations of the Contractor are in addition to the Contractor's obligations under Section 3.18.

§ 10.2.6 The Contractor shall designate a responsible member of the Contractor's organization at the site whose duty shall be the prevention of accidents. This person shall be the Contractor's superintendent unless otherwise designated by the Contractor in writing to the Owner, Construction Manager and Architect.

§ 10.2.7 The Contractor shall not permit any part of the construction or site to be loaded so as to cause damage or create an unsafe condition.

§ 10.2.8 Injury or Damage to Person or Property

If either party suffers injury or damage to person or property because of an act or omission of the other party, or of others for whose acts such party is legally responsible, notice of the injury or damage, whether or not insured, shall be given to the other party within a reasonable time not exceeding 21 days after discovery. The notice shall provide sufficient detail to enable the other party to investigate the matter.

§ 10.3 Hazardous Materials

§ 10.3.1 The Contractor is responsible for compliance with any requirements included in the Contract Documents regarding hazardous materials or substances. If the Contractor encounters a hazardous material or substance not addressed in the Contract Documents and if reasonable precautions will be inadequate to prevent foreseeable bodily injury or death to persons resulting from a material or substance, including but not limited to asbestos or polychlorinated biphenyl (PCB), encountered on the site by the Contractor, the Contractor shall, upon recognizing the condition, immediately stop Work in the affected area and notify the Owner, Construction Manager and Architect of the condition.

§ 10.3.2 Upon receipt of the Contractor's notice, the Owner shall obtain the services of a licensed laboratory to verify the presence or absence of the material or substance reported by the Contractor and, in the event such material or substance is found to be present, to cause it to be rendered harmless. Unless otherwise required by the Contract Documents, the Owner shall furnish in writing to the Contractor, Construction Manager and Architect the names and qualifications of persons or entities who are to perform tests verifying the presence or absence of the material or substance or who are to perform the task of removal or safe containment of the material or substance. The Contractor, the Construction Manager and the Architect will promptly reply to the Owner in writing stating whether or not any of them has reasonable objection to the persons or entities proposed by the Owner. If the Contractor, Construction Manager or Architect has an objection to a person or entity proposed by the Owner, the Owner shall propose another to whom the Contractor, the Construction Manager and the Architect have no reasonable objection. When the material or substance has been rendered harmless, Work in the affected area shall resume upon written agreement of the Owner and Contractor. By Change Order, the Contract Time shall be extended appropriately and the Contract Sum shall be increased by the amount of the Contractor's reasonable additional costs of shutdown, delay, and start-up.

§ 10.3.3 Omitted.

§ 10.3.4 The Owner shall not be responsible under this Section 10.3 for hazardous materials or substances the Contractor brings to the site unless such materials or substances are required by the Contract Documents. The Owner shall be responsible for hazardous materials or substances required by the Contract Documents, except to the extent of the Contractor's fault or negligence in the use and handling of such materials or substances.

§ 10.3.5 The Contractor shall reimburse the Owner for the cost and expense the Owner incurs (1) for remediation of hazardous materials or substances the Contractor brings to the site and negligently handles, or (2) where the Contractor fails to perform its obligations under Section 10.3.1, except to the extent that the cost and expense are due to the Owner's fault or negligence.

AIA Document A232 – 2019. Copyright © 1992, 2009, and 2019. All rights reserved. "The American Institute of Architects," "American Institute of Architects," "AIA," the AIA Logo, and "AIA Contract Documents" are trademarks of The American Institute of Architects. This draft was produced at 09:51:18 EDT on 06/27/2025 under Subscription No.20250121573 which expires on 04/23/2026, is not for resale, is licensed for one-time use only, and may only be used in accordance with the AIA Contract Documents® Terms of Service. To report copyright violations, e-mail docinfo@aiacontracts.com.
User Notes: (685c3d355a2b85e65d7f4843)

§ 10.3.6 If, without negligence on the part of the Contractor, the Contractor is held liable by a government agency for the cost of remediation of a hazardous material or substance solely by reason of performing Work as required by the Contract Documents, the Owner shall reimburse the Contractor for all cost and expense thereby incurred. Notwithstanding the foregoing, advance prior written notice from Owner to commence such remediation shall be a condition precedent to Contractor's entitlement to such remediation costs and expenses.

§ 10.4 Emergencies

In an emergency affecting safety of persons or property, the Contractor shall act, at the Contractor's discretion, to prevent threatened damage, injury, or loss. Additional compensation or extension of time claimed by the Contractor on account of an emergency shall be determined as provided in Article 15 and Article 7. Nothing in this Section shall be construed as relieving the Contractor from the cost and responsibility for emergencies covered hereby, which with normal diligence, planning, and the close supervision of the Work as required under the Contract, could have been foreseen or prevented.

ARTICLE 11 INSURANCE AND BONDS

§ 11.1 Contractor's Insurance and Bonds and Owner-Controlled Insurance Program

§ 11.1.1 The Contractor shall purchase and maintain insurance of the types and limits of liability described below, containing the endorsements, and subject to the terms and conditions, as described in the Agreement or elsewhere in the Contract Documents. The Contractor shall purchase and maintain the required insurance from an insurance company or insurance companies lawfully authorized to issue insurance in the State of Ohio. **The Owner will provide an Owner-Controlled Insurance Program ("OCIP") for the Project, as further described in the OCIP Manual, Version 2, dated March 18, 2026 (and as may be revised by Owner) and included as a part of the Contract Documents. The coverages listed below in Section .1, *Commercial General Liability Insurance* and Section .3 *Umbrella and Excess Liability Insurance* shall be included in the OCIP for "Enrolled" Contractors and "Enrolled" Subcontractors of all tiers performing Work "On-Site". Contractor shall be responsible for ensuring that its Subcontractors of all tiers comply with the requirements set forth herein in order to be approved by the OCIP administrator for "On-Site" Work.**

Enrolled Contractor and Enrolled Subcontractors of all tiers shall provide evidence of coverage for all "Off-Site" Work as listed below in Section .1, *Commercial General Liability Insurance* and Section .3, *Umbrella and Excess Liability Insurance*.

If Contractor and/or Subcontractors are "Enrolled" under the OCIP, each shall provide evidence of coverage for all remaining provisions under Section § 11.1.1, including: Commercial Automobile Liability Insurance; Workers' Compensation and Employer's Liability; Contractor's Equipment/Installation Floater Insurance (Inland Marine); Contractors' Pollution Liability Insurance; Contractors Professional Liability Coverage; and the General Insurance Requirements.

Finally, Contractors and Subcontractors of all tiers that are "Excluded" from the OCIP must comply with <u>all</u> provisions of Section § 11.1.1.

No Contractor or Subcontractor will be permitted "On-Site" until approved by the OCIP administrator.

.1 Commercial General Liability Insurance

(a) Contractor shall maintain Comprehensive/Commercial General Liability insurance on an occurrence basis written on Insurance Service Office (ISO) form CG 0001 or its equivalent with limits not less than those indicated below covering all operations by or on behalf of Contractor providing insurance for bodily injury liability and property damage liability including coverage for:

1. Premises operations
2. Products and completed operations - must be maintained through the applicable Statute of Repose after Substantial Completion of the Project for Contractor and all Additional Named Insureds listed below. For Contractors and Subcontractors of all tiers that are "Excluded" from OCIP, the products and completed

AIA Document A232 – 2019. Copyright © 1992, 2009, and 2019. All rights reserved. "The American Institute of Architects," "American Institute of Architects," "AIA," the AIA Logo, and "AIA Contract Documents" are trademarks of The American Institute of Architects. This draft was produced at 09:51:18 EDT on 06/27/2025 under Subscription No.20250121573 which expires on 04/23/2026, is not for resale, is licensed for one-time use only, and may only be used in accordance with the AIA Contract Documents® Terms of Service. To report copyright violations, e-mail docinfo@aiacontracts.com.
User Notes: (685c3d355a2b85e65d7f4843)

operations coverage shall define an occurrence and expressly cover damages caused by defective work of a Subcontractor. The term "occurrence" shall be specifically defined in such endorsement to include acts, errors, or omissions that cause: (A) "bodily injury" and/or "property damage" resulting from "your work," whether or not included within the "products-completed operations hazard;" or (B) "property damage" included within the "products-completed operations hazard" to "your work," but only if the work out of which the damage arises or arose was performed on Contractor's behalf by a Subcontractor. An acceptable endorsement would be (i) Zurich Insurance's "Resulting Damage to Your Work" endorsement (U-BL-1344-C CW), (ii) Cincinnati Insurance Agency's "Injury or Damage to or Resulting from Your Work and Injury or Damage Resulting from Your Product" endorsement (GA 4315 03 12), or (iii) a substantially similar endorsement approved in writing by the Owner prior to the commencement of the Work.

3. Blanket contractual liability

4. Broad form property damage (including completed operations)

5. Personal and advertising injury liability

6. Explosion, collapse, underground and subsidence hazards (no XCU exclusions are acceptable)

7. Independent contractor liability

8. Exterior Insulation and Finish Systems (EIFS) (applicable only if Contractor is providing this scope of work)

9. Incidental Medical Malpractice (applicable only if Contractor is providing incidental healthcare services)

10. Severability of interests

11. Waiver of subrogation (CG 24 04 (or equivalent))

12. Additional insured – Ongoing Operations (CG 20 10 (04/13) or equivalent)

13. Additional insured – Completed Operations (CG 20 37 (04/13) or equivalent)

14. Primary and Noncontributory (CG 20 01 (or equivalent))

15. No residential exclusion/no communicable disease conclusion if it would materially restrict coverage for the Project

(b) The limits of liability shall not be less than these amounts:

1. $2,000,000 Each Occurrence (combined single limit for bodily injury and property damage)

2. $1,000,000 Personal Injury

3. $2,000,000 Products-Completed Operations Aggregate

4. $4,000,000 General Aggregate - shall apply on a per project basis to Contractor's Work under the Contract Documents per CG 25 03 or equivalent

5. $100,000 Fire Damage (any one fire)

.2 Commercial Automobile Liability Insurance

(a) Contractor shall maintain Commercial Automobile Liability insurance written on ISO form CA 00 01 or its equivalent covering liability arising out of any auto (whether owned, hired, borrowed, scheduled or non-owned) and providing insurance for bodily injury liability and property damage liability including coverage for:

1. Contractual liability insuring the obligations assumed by Contractor in the Contract Documents

2. Waiver of subrogation

DRAFT

AIA Document A232 – 2019. Copyright © 1992, 2009, and 2019. All rights reserved. "The American Institute of Architects," "American Institute of Architects," "AIA," the AIA Logo, and "AIA Contract Documents" are trademarks of The American Institute of Architects. This draft was produced at 09:51:18 EDT on 06/27/2025 under Subscription No.20250121573 which expires on 04/23/2026, is not for resale, is licensed for one-time use only, and may only be used in accordance with the AIA Contract Documents® Terms of Service. To report copyright violations, e-mail docinfo@aiacontracts.com.
User Notes: (685c3d355a2b85e65d7f4843)

3. If the Work requires the removal and transportation of hazardous materials from the Project Site, Automobile liability coverage must include pollution liability coverage applicable to all hazardous waste hauling vehicles including the MCS90 endorsement

(b) The limits of liability of not less than $1,000,000 combined single limit for bodily injury and property damage – each accident

.3 Umbrella and Excess Liability Insurance

(a) Contractor shall maintain Umbrella and Excess Liability insurance on an occurrence basis in excess of the Commercial Liability insurance and Business Automobile Liability insurance, which is at least as broad as each of the underlying policies. The Umbrella and Excess Liability insurance shall contain coverage for:

1. Pay on behalf of wording

2. Concurrency of effective dates with primary policies

3. Blanket contractual liability

4. Punitive damages coverage (where not prohibited by law)

5. Aggregates; apply where applicable in primary

6. Care, custody and control

7. Follow form primary

8. Drop down feature

9. Waiver of subrogation

(b) The limits of liability shall not be less than:

1. $3,000,000 Each Occurrence

2. $3,000,000 Aggregate

.4 Workers' Compensation and Employer's Liability

(a) Workers' Compensation -State of Ohio Statutory Limits and requirements as defined in Ohio Revised Code 4123

(b) This Work is performed in Ohio and is a State of Ohio project, therefore an Ohio Bureau of Workers' Compensation (OBWC) approved Drug Free Workplace policy is required.

(c) Ohio Employer's Liability (Ohio Stop Gap) – In addition to the above requirements, carry Ohio Employer's Liability (Ohio Stop Gap) coverage with limits of not less than $1,000,000 per accident, $1,000,000 per disease and $1,000,000 policy limits on diseases. Such coverage must not contain any exclusionary language that removes coverage for "substantially certain to occur" claims.

(d) If the Work involves ANY employment on or adjacent to navigable waterways, then the workers' compensation policy must be endorsed to include U.S. Longshore and Harborworkers (USL&H) and Jones Act coverages as applicable.

(e) Contractor shall provide Owner with copy of current OBWC Certificate of Premium Payment prior to commencement of Work and upon each renewal date.

.5 Contractor's Equipment/Installation Floater Insurance (Inland Marine)

DRAFT

AIA Document A232 – 2019. Copyright © 1992, 2009, and 2019. All rights reserved. "The American Institute of Architects," "American Institute of Architects," "AIA," the AIA Logo, and "AIA Contract Documents" are trademarks of The American Institute of Architects. This draft was produced at 09:51:18 EDT on 06/27/2025 under Subscription No.20250121573 which expires on 04/23/2026, is not for resale, is licensed for one-time use only, and may only be used in accordance with the AIA Contract Documents® Terms of Service. To report copyright violations, e-mail docinfo@aiacontracts.com.
User Notes: (685c3d355a2b85e65d7f4843)

(a) Contractor shall maintain Contractor's Equipment/Installation Floater Insurance (Inland Marine) for replacement cost for tools, equipment and materials in transit/temporary storage with limits not less than the full value of equipment to be installed/stored on-site. Coverage must include theft coverage.

.6 Contractors' Pollution Liability Insurance

(a) If Contractor's and/or its Subcontractor's Work involves removal or treatment of hazardous materials Contractor is required to provide and maintain Contractors Pollution Liability Insurance that will be primary and non-contributory to any Pollution Coverage provided by the OCIP. Such coverage will specifically schedule the type of Work in the Contract. Owner will determine limits based on the nature of the Work and the risk involved.

.7 Contractors Professional Liability Insurance

(a) If Contractor is required by the Contract Documents to furnish engineered drawings and calculations stamped by a qualified and licensed design professional, Contractor shall maintain Contractors Professional Liability Insurance with a retroactive date that shall be no later than the date of first service from Contractor on the Project. Contractor is required to maintain coverage for a term extending through the full Statute of Repose.

(b) The limits of liability shall not be less than:

1. $2,000,000 Each Occurrence

2. $2,000,000 Annual Aggregate

3. $25,000 Maximum Deductible Permissible

(c) Subcontractor shall provide proof of Professional Liability coverage for Design Errors and Omissions with limits of not less than $1,000,000 per claim and $1,000,000 annual aggregate, or limits carried, whichever are greater. The Professional Liability coverages shall be maintained continuously in effect during the Term of this Agreement through the applicable Statute of Repose.

.8 General Insurance Requirements

(a) Certificate Holder shall be Board of County Commissioners of Hamilton County Ohio and certificate of insurance is to be mailed to Hamilton County, Risk Manager, Room 707, 138 East Court Street, Cincinnati, OH 45202. The name of the Project shall be placed on the certificate. Copies of the certificate and supporting forms showing compliance with the insurance requirements must be provided prior to execution of the Agreement. Certificate shall be reissued when any insurance coverage contained therein is renewed.

(b) The Board of County Commissioners, Hamilton County, Ohio, the Cincinnati Bengals, Inc. ("Team"), Paul Brown Stadium Ltd. ("Manager"), the Architect and the Architect's consultants, the Construction Manager and the Construction Manager's consultants and each of their respective officials, members, employees, agents and volunteers (collectively, the "Additional Named Insureds") shall be named as additional insureds under the Contractor's CGL/Umbrella, Automobile, and Contractors' Pollution Liability Insurance policies for any liability arising out of the performance of the Work. Coverage under the CGL for all required Additional Insureds shall be provided by a policy provision or by an endorsement providing coverage at least as broad as Additional Named Insured endorsement form GC 20 10 (Form B) as published by ISO. A copy of the endorsement form must accompany the certificate furnished to Owner's Risk Manager. Forms deemed by Owner's Risk Manager as equivalent will be accepted but must include additional insured status for ongoing operations and completed operations. Certificates of insurance will reflect the Additional Named Insureds as additional insured and will indicate a waiver of subrogation in favor of the Owner, Team and Manager.

(c) Contractor's policies shall be endorsed to provide that there will be no cancellation or reduction in coverage without thirty (30) days prior written notice to Owner's Risk Manager.

(d) Contractor shall ensure that all tiers of their Subcontractors shall procure and maintain insurance in like form and adequate amounts including Additional Named Insured requirements, all as set forth in this Article 11.

AIA Document A232 – 2019. Copyright © 1992, 2009, and 2019. All rights reserved. "The American Institute of Architects," "American Institute of Architects," "AIA," the AIA Logo, and "AIA Contract Documents" are trademarks of The American Institute of Architects. This draft was produced at 09:51:18 EDT on 06/27/2025 under Subscription No.20250121573 which expires on 04/23/2026, is not for resale, is licensed for one-time use only, and may only be used in accordance with the AIA Contract Documents® Terms of Service. To report copyright violations, e-mail docinfo@aiacontracts.com.
User Notes: (685c3d355a2b85e65d7f4843)

(e) Contractor's insurance shall be primary insurance with respect to any insurance or self-insurance programs carried by Owner or any of the Additional Named Insureds.

(f) Umbrella Excess Liability in combination with primary liability coverages and limits as outlined above to satisfy the required limits of liability is acceptable.

(g) Umbrella / Excess liability coverage used in conjunction with primary policies shall have concurrency of effective dates with underlying policies; drop down feature, and; "Pay on behalf of" wording.

(h) All insurance coverage procured by the Contractor shall be provided by insurance companies rated A minus VII or better by the current Best's Key Rating Guide, latest edition in effect as of the date of the Agreement, and subsequently in effect at the time of renewal of any policies required by the Contract Documents.

(i) If the Owner is damaged by the failure of the Contractor to purchase or maintain insurance required under Section 11.1, then the Contractor shall bear all reasonable costs (including attorneys' fees and court and settlement expenses) properly attributable thereto.

§ 11.1.2 The Contractor shall purchase from and maintain in a company or companies lawfully authorized to do business in Ohio such insurance as will protect the Contractor from claims set forth below which may arise out of or result from the Contractor's operations under the Contract Documents and for which the Contractor may be legally liable, whether such operations be by the Contractor or by a Subcontractor or by anyone directly or indirectly employed by any of them, or by anyone for whose acts any of them may be liable:

.1 claims under workers compensation, disability benefit and other similar employee benefit acts which are applicable to the Work to be performed;

.2 claims for damages because of bodily injury, occupational sickness or disease, or death of the Contractor's employees;

.3 claims for damages because of bodily injury, sickness or disease, or death of any person other than the Contractor's employees;

.4 claims for damages insured by usual personal injury liability coverage which are sustained (1) by a person because of an offense directly or indirectly related to employment of such person by the Contractor, or (2) by another person;

.5 claims for damages, other than to the Work itself, because of injury to or destruction of tangible property, including loss of use resulting therefrom;

.6 claims for damages because of bodily injury, death of a person or property damage arising out of ownership, maintenance or use of a motor vehicle; and

.7 claims involving contractual liability insurance applicable to the Contractor's obligations under Section 3.18.

§ 11.1.3 The insurance required by Section 11.1 shall be written for not less than limits of liability specified herein or required by law, whichever coverage is greater. Coverages, whether written on an occurrence or claims-made basis, shall be maintained without interruption from date of commencement of the Work until date of final payment and termination of any coverage required to be maintained after final payment. If any insurance required herein is to be issued or renewed on a claims-made form as opposed to the occurrence form, the retroactive date for coverage shall be no later than the commencement date of the Project. Further, the policy shall state that in the event of cancellation or non-renewal, claim discovery period or "tail coverage" shall be 1 year beyond the cancellation or non-renewal date.

§ 11.1.4 Certificates of insurance required by this Section 11.1 shall contain a provision that coverages afforded under the policies will not be canceled or allowed to expire until at least thirty (30) days' prior written notice has been given to the Owner's Risk Manager. If any of the foregoing insurance coverages are required to remain in force after final payment and are reasonably available, an additional certificate evidencing continuation of such coverage shall be submitted with the final Application for Payment as required by Section 9.10.2.

§ 11.2 Property Insurance

(Check one of the following boxes)

☒ **The Owner intends to purchase and maintain the property insurance set forth in this Section 11.2.1.**

AIA Document A232 – 2019. Copyright © 1992, 2009, and 2019. All rights reserved. "The American Institute of Architects," "American Institute of Architects," "AIA," the AIA Logo, and "AIA Contract Documents" are trademarks of The American Institute of Architects. This draft was produced at 09:51:18 EDT on 06/27/2025 under Subscription No.20250121573 which expires on 04/23/2026, is not for resale, is licensed for one-time use only, and may only be used in accordance with the AIA Contract Documents® Terms of Service. To report copyright violations, e-mail docinfo@aiacontracts.com.
User Notes: (685c3d355a2b85e65d7f4843)

☐ **The Owner does not intend to purchase and maintain the property insurance set forth in this Section 11.2.1**

§ 11.2.1 Unless otherwise provided, the Owner, at the Owner's option, may purchase and maintain, in a company or companies lawfully authorized to do business in Ohio, property insurance written on a builder's risk policy or on a property policy form that provides equal or greater coverage than a builder's risk policy form, on a replacement cost basis in at least the amount of the initial Contract Sum, plus value of subsequent Contract modifications and cost of materials. Such property insurance shall be maintained, unless otherwise provided in the Contract Documents or otherwise agreed in writing by all persons and entities who are beneficiaries of such insurance, until final payment has been made as provided in Section 9.10 or until no person or entity other than the Owner has an insurable interest in the property required by this Section 11.2 to be covered, whichever is earlier. This insurance shall include interests of the Owner, Contractor, Subcontractors of all tiers in the Work.

§ 11.2.1.1 Property insurance shall be on an "all-risk" policy form and shall insure against the perils of fire and extended coverage and physical loss or damage including, without duplication of coverage, theft, vandalism, malicious mischief, collapse, falsework, temporary buildings and debris removal including demolition occasioned by enforcement of any applicable legal requirements, and shall cover reasonable compensation for Architect's services and expenses required as a result of such insured loss. Coverage for other perils shall not be required unless otherwise provided in the Contract Documents. Property insurance provided by the Owner shall not cover any tools, apparatus, machinery, scaffolding, hoists, forms, staging, shoring and other similar items commonly referred to as construction equipment, which may be on the site and the capital value of which is not included in the Work. The Contractor shall make its own arrangements for any insurance it may require on such construction equipment. Any such policy obtained by the Contractor under this Section 11.2.1 shall include a waiver of subrogation in accordance with the requirements of Section 11.2.6.

§ 11.2.1.2 If the Owner does not intend to purchase such property insurance required by the Contract Documents and with all of the coverages in the amount described above, the Contractor may then effect such insurance which will protect the interests of the Contractor, Subcontractors and Sub-subcontractors in the Work, and by appropriate Change Order the cost thereof shall be charged to the Owner.

§ 11.2.1.3 If the property insurance requires minimum deductibles and such deductibles are identified in the Contract Documents, the Contractor shall pay costs not covered because of such deductibles. If the Owner or insurer increases the required minimum deductibles above the amounts so identified or if the Owner elects to purchase this insurance with voluntary deductible amounts, the Owner shall be responsible for payment of the additional costs not covered because of such increased or voluntary deductibles.

§ 11.2.1.4 Unless otherwise provided in the Contract Documents, this property insurance shall cover portions of the Work stored off the site after written approval of the Owner at the value established in the approval and also portions of the Work in transit.

§ 11.2.2 Boiler and Machinery Insurance. If applicable, the Owner shall purchase and maintain boiler and machinery insurance required by the Contract Documents or by law, which shall specifically cover such insured objects during installation and until final acceptance by the Owner; this insurance shall include interests of the Owner, Contractor, Subcontractors and Sub-subcontractors in the Work, and the Owner and Contractor shall be named insureds.

§ 11.2.3 Loss of Use Insurance. The Owner, at the Owner's option and for the Owner's benefit, may purchase and maintain such insurance as will insure the Owner against loss of use of the Owner's property due to fire or other hazards, however caused. The Owner waives all rights of action against the Contractor for loss of use of the Owner's property, including consequential losses due to fire or other hazards however caused, to the extent (1) of actual recovery of any insurance proceeds under the policies obtained pursuant to Section 11.2.3 and (2) permitted by applicable policies of insurance.

§ 11.2.4 If the Contractor requests in writing that insurance for risks other than those described herein or for other special hazards be included in the property insurance policy, the Owner shall, if possible, include such insurance, and the cost thereof shall be charged to the Contractor by appropriate Change Order.

§ 11.2.5 Before an exposure to loss may occur, the Owner shall file with the Contractor a copy of the certificate of insurance that evidences each such insurance coverages required by this Section 11.2. Each policy shall contain all generally applicable conditions, definitions, exclusions and endorsements related to this Project. Each policy shall contain a provision that the policy will not be canceled or allowed to expire until at least thirty (30) days' prior written notice has

AIA Document A232 – 2019. Copyright © 1992, 2009, and 2019. All rights reserved. "The American Institute of Architects," "American Institute of Architects," "AIA," the AIA Logo, and "AIA Contract Documents" are trademarks of The American Institute of Architects. This draft was produced at 09:51:18 EDT on 06/27/2025 under Subscription No.20250121573 which expires on 04/23/2026, is not for resale, is licensed for one-time use only, and may only be used in accordance with the AIA Contract Documents® Terms of Service. To report copyright violations, e-mail docinfo@aiacontracts.com.
User Notes: (685c3d355a2b85e65d7f4843)

been given to the Contractor.

§ 11.2.6 Waivers of Subrogation. The Owner and the Contractor waive all rights against (1) each other and any of their subcontractors, sub-subcontractors, agents and employees, each of the other; (2) the Construction Manager and Construction Manager's consultants; (3) the Architect and Architect's consultants; (4) other Contractors; and (5) Separate Contractors, if any, and any of their respective subcontractors, sub-subcontractors, agents and employees, for damages caused by fire or other perils to the extent those losses are covered by property insurance required by Section 11.2 or other property insurance applicable to the Work, except such rights as they have to proceeds of such insurance held by the Owner in good faith. The Owner or Contractor, as appropriate, shall require of the Architect, Architect's consultants, Construction Manager, Construction Manager's consultants, Separate Contractors and other Contractors, if any, and the subcontractors, sub-subcontractors, agents and employees of any of them, by appropriate agreements, written where legally required for validity, similar waivers each in favor of other parties enumerated herein. The policies of insurance purchased and maintained by each party pursuant to Article 11 shall not prohibit waivers of subrogation but provide such waivers of subrogation by endorsement or otherwise. A waiver of subrogation shall be effective as to a person or entity even though that person or entity would otherwise have a duty of indemnification, contractual or otherwise, did not pay the insurance premium directly or indirectly, and whether or not the person or entity had an insurable interest in the property damaged.

§ 11.2.7 A loss insured under Owner's property insurance shall be adjusted by the Owner in good faith and made payable to the Owner in good faith for the insureds, as their interests may appear, subject to requirements of any applicable mortgagee clause and of Section 11.2.10. The Contractor shall pay Subcontractors their just shares of insurance proceeds received by the Contractor, and by appropriate agreements, written where legally required for validity, shall require Subcontractors to make payments to their Sub-subcontractors in similar manner.

§ 11.2.8 If required in writing by a party in interest, the Owner in good faith shall, upon occurrence of an insured loss, give bond for proper performance of the Owner's duties. The cost of required bonds shall be charged against proceeds received in good faith. The Owner shall deposit in a separate account proceeds so received, which the Owner shall distribute in accordance with such agreement as the parties in interest may reach. If after such loss no other special agreement is made, replacement of damaged property shall be covered by appropriate Change Order.

§ 11.2.9 The Owner in good faith shall have power to adjust and settle a loss with insurers unless one of the parties in interest shall object in writing within five (5) days after occurrence of loss to the Owner's exercise of this power; if such objection be made, an arbitrator mutually acceptable to the parties in interest and the Owner shall be promptly chosen. The Owner, as trustee, shall in such case make settlement with the insurers in accordance with the directions of such arbitrator. If distribution of the insurance proceeds by arbitration is required, the arbitrators shall direct such distribution.

§ 11.2.10 Partial occupancy or use in accordance with Section 9.9 shall not commence until the insurance company or companies providing property insurance have consented to such partial occupancy or use by endorsement or otherwise. The Owner and the Contractor shall take reasonable steps to obtain consent of the insurance company or companies and shall, without mutual written consent, take no action with respect to partial occupancy or use that would cause cancellation, lapse or reduction of insurance.

§ 11.3 Bid Guaranty and Contract Bond

§ 11.3.1 The Owner shall require the Contractor to furnish either a Bid Guaranty and Contract Bond in accordance with Section 153.571 of the Ohio Revised Code or a Performance Bond in accordance with Section 153.57 of the Ohio Revised Code covering faithful performance of the Contract and payment of obligations arising thereunder as set forth in the Contract Documents. Including specifically:

.1 Except as otherwise required by statute, the form and substance of such bonds shall be satisfactory to the Owner in the Owner's sole judgment;

.2 Bonds shall be executed by a responsible surety licensed in Ohio, with a Best's rating of no less than A/XII and shall remain in effect for a period not less than two (2) years following the Date of Substantial Completion or the time required to resolve any items of incomplete Work and the payment of any disputed amounts, whichever time period is longer;

.3 The Bond shall be in an amount equal to the Contract Sum;

.4 The Contractor shall require the attorney in fact who executes the required bonds on behalf of the surety to affix thereto a certified and current copy of his power of attorney indicating the monetary limit of such power;

.5 Every Bond under this Section 11.3.1 must display the Surety's Bond Number; and

AIA Document A232 – 2019. Copyright © 1992, 2009, and 2019. All rights reserved. "The American Institute of Architects," "American Institute of Architects," "AIA," the AIA Logo, and "AIA Contract Documents" are trademarks of The American Institute of Architects. This draft was produced at 09:51:18 EDT on 06/27/2025 under Subscription No.20250121573 which expires on 04/23/2026, is not for resale, is licensed for one-time use only, and may only be used in accordance with the AIA Contract Documents® Terms of Service. To report copyright violations, e-mail docinfo@aiacontracts.com.
User Notes: (685c3d355a2b85e65d7f4843)

.6 The Board of County Commissioners, Hamilton County, Ohio and Messer Construction Co. shall be named as Obligees on the Bid Guaranty and Contract Bond.

§ 11.3.2 Upon the request of any person or entity appearing to be a potential beneficiary of bonds covering payment of obligations arising under the Contract, the Contractor shall promptly furnish a copy of the bonds or shall permit a copy to be made.

§ 11.3.3 The Contractor shall keep the surety informed of the progress of the Work, and, where necessary, obtain the surety's consent to, or waiver of: (1) notice of changes in the Work; (2) request for reduction or release of retention; (3) request for final payment; and (4) any other material required by the surety. The Owner shall be notified by the Contractor, in writing, of all communications with the surety. The Owner may, in the Owner's sole discretion, inform surety of the progress of the Work and obtain consent as necessary to protect the Owner's rights, interest, privileges and benefits under and pursuant to any bond issued in connection with the Work.

§ 11.3.4 If the Surety on any bond furnished by Contractor is declared bankrupt or becomes insolvent or its right to do business is terminated in the State of Ohio or it ceases to meet the requirements of the preceding paragraph, Contractor shall within ten (10) days thereafter, substitute another bond and surety, both of which must conform to the requirements of the Project Manual and be otherwise acceptable to Owner.

ARTICLE 12 UNCOVERING AND CORRECTION OF WORK

§ 12.1 Uncovering of Work

§ 12.1.1 If a portion of the Work is covered contrary to the Owner's, Construction Manager's or Architect's request or to requirements specifically expressed in the Contract Documents, it must, if requested in writing by either, be uncovered for their examination and be replaced at the Contractor's expense without change in the Contract Time or Contract Sum.

§ 12.1.2 If a portion of the Work has been covered that the Owner, Construction Manager or Architect has not specifically requested to examine prior to its being covered, the Owner, Construction Manager or Architect may request to see such Work and it shall be uncovered by the Contractor. If such Work is in accordance with the Contract Documents, the Contractor shall be entitled to an equitable adjustment to the Contract Sum and Contract Time as may be appropriate. If such Work is not in accordance with the Contract Documents, the costs of uncovering the Work, and the cost of correction, shall be at the Contractor's expense.

§ 12.2 Correction of Work

§ 12.2.1 Before Substantial Completion

The Contractor shall promptly correct Work rejected by the Construction Manager or Architect or failing to conform to the requirements of the Contract Documents, discovered before Substantial Completion, and whether or not fabricated, installed or completed. Costs of correcting such rejected Work, including additional testing and inspections, the cost of uncovering and replacement, and compensation for the Construction Manager's and Architect's services and expenses made necessary thereby, shall be at the Contractor's expense, without change in the Contract Time.

§ 12.2.2 After Substantial Completion

§ 12.2.2.1 In addition to the Contractor's obligations under Section 3.5, if, within one year after the date of Substantial Completion of the Work or designated portion thereof, or after the date for commencement of warranties established under Section 9.9.1, or by terms of any applicable special warranty required by the Contract Documents, any of the Work is found to be not in accordance with the requirements of the Contract Documents, the Contractor shall begin to correct it promptly (but not later than five (5) business days) after receipt of notice from the Owner to do so, and proceed with prompt diligence, at Contractor's expense, unless the Owner has previously given the Contractor a written acceptance of such condition. The Owner shall give such notice promptly after discovery of the condition. If the Contractor fails to correct such nonconforming Work as provided above, the Owner, without prejudice to any of its rights or remedies and without further notice, may correct it. The Contractor, upon written notice from the Owner, shall pay the Owner, within ten (10) days after the date of such notice, all of the Owner's costs and expenses incurred in connection with such correction, including without limitation the Owner's administrative, legal and consulting expenses.

§ 12.2.2.2 The one-year period for correction of Work shall be extended with respect to portions of Work first performed after Substantial Completion by the period of time between Substantial Completion and the actual completion of that portion of the Work.

AIA Document A232 – 2019. Copyright © 1992, 2009, and 2019. All rights reserved. "The American Institute of Architects," "American Institute of Architects," "AIA," the AIA Logo, and "AIA Contract Documents" are trademarks of The American Institute of Architects. This draft was produced at 09:51:18 EDT on 06/27/2025 under Subscription No.20250121573 which expires on 04/23/2026, is not for resale, is licensed for one-time use only, and may only be used in accordance with the AIA Contract Documents® Terms of Service. To report copyright violations, e-mail docinfo@aiacontracts.com.
User Notes: (685c3d355a2b85e65d7f4843)

§ 12.2.2.3 The Contractor's warranties shall not be affected, diminished, or restricted by the limitations, restrictions or conditions of a manufacturer, supplier or installer's warranty, including the expiration of any Uniform Commercial Code statute of limitations. Inability or refusal of a Subcontractor, supplier or installer responsible for defective Work to correct or warrant such Work shall not relieve Contractor from performing under the warranty.

§ 12.2.3 The Contractor shall remove from the site portions of the Work that are not in accordance with the requirements of the Contract Documents and are neither corrected by the Contractor nor accepted by the Owner.

§ 12.2.4 The Contractor shall bear the cost of correcting destroyed or damaged construction of the Owner, Separate Contractors, or other Contractors, whether completed or partially completed, caused by the Contractor's correction or removal of Work that is not in accordance with the requirements of the Contract Documents.

§ 12.2.5 Nothing contained in this Section 12.2 shall be construed to establish a period of limitation with respect to other obligations the Contractor has under the Contract Documents. Establishment of the one-year period for correction of Work as described in Section 12.2.2 relates only to the specific obligation of the Contractor to correct the Work, and has no relationship to the time within which the obligation to comply with the Contract Documents may be sought to be enforced, nor to the time within which proceedings may be commenced to establish the Contractor's liability with respect to the Contractor's obligations other than specifically to correct the Work.

§ 12.3 Acceptance of Nonconforming Work

If the Owner prefers to accept Work that is not in accordance with the requirements of the Contract Documents, the Owner may do so instead of requiring its removal and correction, in which case the Contract Sum will be reduced as appropriate and equitable. Such adjustment shall be effected whether or not final payment has been made.

§ 12.4 If the Contractor, a Subcontractor, or anyone for whom either is responsible damages any portion of the Work, including, without limitation, mechanical, electrical, plumbing and other building systems, machinery, equipment or other mechanical device, the Contractor shall cause such damage to be repaired at no expense to the Owner.

ARTICLE 13 MISCELLANEOUS PROVISIONS

§ 13.1 Governing Law

The Contract shall be governed by the law of the place where the Project is located excluding that jurisdiction's choice of law rules, and the venue for any dispute shall be the County where the Project is located.

§ 13.2 Successors and Assigns

§ 13.2.1 The Owner and Contractor respectively bind themselves, their partners, successors, assigns, and legal representatives to the other party hereto and to partners, successors, assigns and legal representatives for such other party in respect to the covenants, agreements, and obligations contained in the Contract Documents. Except as provided in Section 13.2.2, neither party to the Contract shall assign the Contract as a whole without written consent of the other. If either party attempts to make an assignment without such consent, that party shall nevertheless remain legally responsible for all obligations under the Contract.

§ 13.2.2 The Owner may, without consent of the Contractor, assign the Contract to a lender providing construction financing for the Project, if the lender assumes the Owner's rights and obligations under the Contract Documents. The Contractor shall execute all consents reasonably required to facilitate the assignment.

§ 13.3 Rights and Remedies

§ 13.3.1 Duties and obligations imposed by the Contract Documents and rights and remedies available thereunder shall be in addition to and not a limitation of duties, obligations, rights, and remedies otherwise imposed or available by law.

§ 13.3.2 No action or failure to act by the Owner, Construction Manager, Architect, or Contractor shall constitute a waiver of a right or duty afforded them under the Contract, nor shall such action or failure to act constitute approval of or acquiescence in a breach thereunder, except as may be specifically agreed upon in writing. A waiver of any provision on one occasion shall not be deemed a waiver of that provision on any subsequent occasion, unless specifically stated in writing.

AIA Document A232 – 2019. Copyright © 1992, 2009, and 2019. All rights reserved. "The American Institute of Architects," "American Institute of Architects," "AIA," the AIA Logo, and "AIA Contract Documents" are trademarks of The American Institute of Architects. This draft was produced at 09:51:18 EDT on 06/27/2025 under Subscription No.20250121573 which expires on 04/23/2026, is not for resale, is licensed for one-time use only, and may only be used in accordance with the AIA Contract Documents® Terms of Service. To report copyright violations, e-mail docinfo@aiacontracts.com.
User Notes: (685c3d355a2b85e65d7f4843)

§ 13.4 Tests and Inspections

§ 13.4.1 Tests, inspections, and approvals of portions of the Work shall be made as required by the Contract Documents and by applicable laws, statutes, ordinances, codes, rules, and regulations or lawful orders of public authorities. Unless otherwise provided, the Contractor shall make arrangements for such tests, inspections, and approvals with an independent testing laboratory or entity acceptable to the Owner, or with the appropriate public authority, and shall bear all related costs of tests, inspections, and approvals. The Contractor shall give the Owner, Construction Manager and Architect timely notice of when and where tests and inspections are to be made so that the Owner, Construction Manager and Architect may be present for such procedures. The Owner shall bear costs of tests, inspections, or approvals that do not become requirements until after bids are received or negotiations concluded. The Owner shall directly arrange and pay for tests, inspections, or approvals where building codes or applicable laws or regulations so require.

§ 13.4.2 If the Construction Manager, Architect, Owner, or public authorities having jurisdiction determine that portions of the Work require additional testing, inspection, or approval not included under Section 13.4.1, the Construction Manager and Architect will, upon written authorization from the Owner, instruct the Contractor to make arrangements for such additional testing, inspection, or approval, by an entity acceptable to the Owner, and the Contractor shall give timely notice to the Owner, Construction Manager and Architect of when and where tests and inspections are to be made so that the Owner, Construction Manager and Architect may be present for such procedures. Such costs, except as provided in Section 13.4.3, shall be at the Owner's expense.

§ 13.4.3 If procedures for testing, inspection, or approval under Sections 13.4.1 and 13.4.2 reveal failure of the portions of the Work to comply with requirements established by the Contract Documents, all costs made necessary by such failure, including those of repeated procedures and compensation for the Owner's, Construction Manager's and Architect's services and expenses, shall be at the Contractor's expense, without change to the Contract Time.

§ 13.4.4 Required certificates of testing, inspection, or approval shall, unless otherwise required by the Contract Documents, be secured by the Contractor and promptly delivered to the Construction Manager for transmittal to the Architect.

§ 13.4.5 If the Construction Manager or Architect is to observe tests, inspections, or approvals required by the Contract Documents, the Construction Manager or Architect will do so promptly and, where practicable, at the normal place of testing.

§ 13.4.6 Tests or inspections conducted pursuant to the Contract Documents shall be made promptly to avoid unreasonable delay in the Work.

§ 13.4.7 If substitute materials or equipment are proposed by the Contractor, it shall pay the cost of all tests which may be necessary to satisfy the Architect and Owner that specification requirements are met.

§ 13.5 Interest

Payments due and unpaid under the Contract Documents shall bear interest from the date payment is due at the rate the parties agree in the Agreement between Owner and Contractor.

ARTICLE 14 TERMINATION OR SUSPENSION OF THE CONTRACT

§ 14.1 Termination by the Contractor

§ 14.1.1 The Contractor may terminate the Contract if the Work is stopped for a period of 30 consecutive days through no act or fault of the Contractor, a Subcontractor, a Sub-subcontractor, their agents or employees, or any other persons or entities performing portions of the Work, for any of the following reasons:

.1 Issuance of an order of a court or other public authority having jurisdiction that requires all Work to be stopped;

.2 An act of government, such as a declaration of national emergency, that requires all Work to be stopped; or

.3 Because the Construction Manager has not certified or the Architect has not issued a Certificate for Payment and has not notified the Contractor of the reason for withholding certification as provided in Section 9.4, or because the Owner has not made payment on a Certificate for Payment within the time stated in the Contract Documents.

AIA Document A232 – 2019. Copyright © 1992, 2009, and 2019. All rights reserved. "The American Institute of Architects," "American Institute of Architects," "AIA," the AIA Logo, and "AIA Contract Documents" are trademarks of The American Institute of Architects. This draft was produced at 09:51:18 EDT on 06/27/2025 under Subscription No.20250121573 which expires on 04/23/2026, is not for resale, is licensed for one-time use only, and may only be used in accordance with the AIA Contract Documents® Terms of Service. To report copyright violations, e-mail docinfo@aiacontracts.com.
User Notes: (685c3d355a2b85e65d7f4843)

§ 14.1.2 The Contractor may terminate the Contract if, through no act or fault of the Contractor, a Subcontractor, a Sub-subcontractor, their agents or employees, or any other persons or entities performing portions of the Work, repeated suspensions, delays, or interruptions of the entire Work by the Owner as described in Section 14.3, constitute in the aggregate more than 100 percent of the total number of days scheduled for completion, or 120 days in any 365-day period, whichever is less.

§ 14.1.3 If one of the reasons described in Section 14.1.1 or 14.1.2 exists, the Contractor may, upon seven days' written notice to the Owner, Construction Manager and Architect, and failure of the Owner to begin to cure the condition during the seven (7) day period, terminate the Contract and recover from the Owner payment for Work properly executed, as well as reasonable overhead and profit on Work executed, and costs incurred by reason of such termination, but not to exceed the Contract Sum.

§ 14.1.4 If the Work is stopped for a period of 60 consecutive days through no act or fault of the Contractor, a Subcontractor, a Sub-subcontractor, or their agents or employees, or any other persons performing portions of the Work because the Owner has repeatedly failed to fulfill the Owner's obligations under the Contract Documents with respect to matters important to the progress of the Work, the Contractor may, upon seven additional days' notice to the Owner, Construction Manager and Architect, terminate the Contract and recover from the Owner as provided in Section 14.1.3.

§ 14.2 Termination by the Owner for Cause

§ 14.2.1 The Owner may terminate the Contract if the Contractor

- **.1** refuses or fails to supply enough properly skilled workers or proper materials;
- **.2** fails to make payment to Subcontractors or suppliers in accordance with the respective agreements between the Contractor and the Subcontractors or suppliers;
- **.3** disregards applicable laws, statutes, ordinances, codes, rules and regulations, or lawful orders of a public authority;
- **.4** otherwise is guilty of substantial breach of a provision of the Contract Documents;
- **.5** is adjudged bankrupt, or if Contractor made a general assignment for the benefit of creditors or if a receiver is appointed on account of such insolvency;
- **.6** fails to furnish the Owner with reasonable assurances satisfactory to the Owner evidencing the Contractor's ability to complete the Work in compliance with all the requirements of the Contract Documents; or
- **.7** fails after commencement of the Work to proceed continuously with the construction and completion of the Work for more than ten (10) days, except as permitted under the Contract Documents.

§ 14.2.2 When any of the reasons described in Section 14.2.1 exist, the Owner may, without prejudice to any other rights or remedies of the Owner and after giving the Contractor and the Contractor's surety, if any, seven days' written notice, terminate employment of the Contractor and may, subject to any prior rights of the surety:

- **.1** Exclude the Contractor from the site and take possession of all materials, equipment, tools, and construction equipment and machinery thereon owned by the Contractor;
- **.2** Accept assignment of subcontracts pursuant to Section 5.4; and
- **.3** Finish the Work by whatever reasonable method the Owner may deem expedient. Upon written request of the Contractor, the Owner shall furnish to the Contractor a detailed accounting of the costs incurred by the Owner in finishing the Work.

§ 14.2.3 When the Owner terminates the Contract for one of the reasons stated in Section 14.2.1, the Contractor shall not be entitled to receive further payment until the Work is finished and shall otherwise remain liable to the Owner for all damages incurred as a result of the breach, if any, of this Agreement.

§ 14.2.4 If the unpaid balance of the Contract Sum exceeds costs of finishing the Work, including compensation for the Construction Manager's and Architect's services and expenses made necessary thereby, and other damages incurred by the Owner, including attorneys' fees, and not expressly waived, such excess shall be paid to the Contractor. If such costs and damages exceed the unpaid balance, the Contractor shall pay the difference to the Owner within ten (10) days of written notice by the Owner. The amount to be paid to the Contractor or Owner, as the case may be, shall, upon application, be certified by the Initial Decision Maker after consultation with the Construction Manager, and this obligation for payment shall survive termination of the Contract.

§ 14.3 Suspension by the Owner for Convenience

AIA Document A232 – 2019. Copyright © 1992, 2009, and 2019. All rights reserved. "The American Institute of Architects," "American Institute of Architects," "AIA," the AIA Logo, and "AIA Contract Documents" are trademarks of The American Institute of Architects. This draft was produced at 09:51:18 EDT on 06/27/2025 under Subscription No.20250121573 which expires on 04/23/2026, is not for resale, is licensed for one-time use only, and may only be used in accordance with the AIA Contract Documents® Terms of Service. To report copyright violations, e-mail docinfo@aiacontracts.com.
User Notes: (685c3d355a2b85e65d7f4843)

§ 14.3.1 The Owner may, without cause, order the Contractor in writing to suspend, delay or interrupt the Work, in whole or in part for such period of time as the Owner may determine.

§ 14.3.2 The Contract Sum and the Contract Time shall be adjusted for increases in the cost and time caused by suspension, delay, or interruption under Section 14.3.1. Adjustment of the Contract Sum shall include profit. No adjustment shall be made to the extent:

- **.1** that performance is, was, or would have been, so suspended, delayed, or interrupted, by another cause for which the Contractor is responsible; or
- **.2** that an equitable adjustment is made or denied under another provision of this Contract.

§ 14.4 Termination by the Owner for Convenience

§ 14.4.1 The Owner may, at any time, terminate, in whole or in part, the Contract for the Owner's convenience and without cause.

§ 14.4.2 Upon receipt of notice from the Owner of such termination for the Owner's convenience, the Contractor shall

- **.1** cease operations as directed by the Owner in the notice;
- **.2** take actions necessary, or that the Owner may direct, for the protection and preservation of the Work;
- **.3** except for Work directed to be performed prior to the effective date of termination stated in the notice, terminate all existing subcontracts and purchase orders (except those subcontracts or purchase orders subject to assignment pursuant to Section 5.4) and enter into no further subcontracts and purchase orders;
- **.4** where directed by Owner, immediately transfer to Owner all materials, supplies and work in progress acquired by Contractor in connection with the performance of the Work; and
- **.5** immediately deliver all plans, drawings, specifications and other necessary information to the Owner.

§ 14.4.3 In case of such termination for the Owner's convenience, the Owner shall pay the Contractor for the direct costs of the Work properly executed; direct and actual reasonable costs incurred by reason of the termination, including direct costs attributable to termination of Subcontracts.

§ 14.4.4 Upon a determination that a termination of this Contract by Owner other than a termination for convenience under this Section 14.4 was wrongful or improper for any reason, such termination shall automatically be deemed converted to a convenience termination under this Section 14.4, and the Contractor's remedy for such wrongful termination shall be limited to the recoveries specified under Section 14.4.3.

§ 14.4.5 All obligations of the Contractor under the Agreement with respect to completed Work, including but not limited to all warranties, guarantees, and indemnitees, shall apply to all Work completed or substantially completed by the Contractor prior to a convenience termination by the Owner. Notwithstanding the foregoing, any convenience termination by the Owner or payments to the Contractor shall be without prejudice to any claims or legal remedies that the Owner may have against the Contractor for any cause.

ARTICLE 15 CLAIMS AND DISPUTES

§ 15.1 Claims

§ 15.1.1 Definition. A Claim is a demand or assertion by one of the parties seeking, as a matter of right, payment of money, a change in the Contract Time, or other relief with respect to the terms of the Contract. The term "Claim" also includes other disputes and matters in question between the Owner and Contractor arising out of or relating to the Contract. The responsibility to substantiate Claims shall rest with the party making the Claim.

§ 15.1.2 Time Limits on Claims

The Owner and Contractor shall commence all Claims and causes of action against the other and arising out of or related to the Contract, whether in contract, tort, breach of warranty or otherwise, in accordance with the requirements of the dispute resolution method selected in the Agreement and within the period specified by applicable law. The Owner and Contractor waive all Claims and causes of action not commenced in accordance with this Section 15.1.2.

§ 15.1.3 Notice of Claims

§ 15.1.3.1 Claims by either the Owner or Contractor, where the condition giving rise to the Claim is first discovered prior to expiration of the period for correction of the Work set forth in Section 12.2.2, shall be initiated by notice to the

AIA Document A232 – 2019. Copyright © 1992, 2009, and 2019. All rights reserved. "The American Institute of Architects," "American Institute of Architects," "AIA," the AIA Logo, and "AIA Contract Documents" are trademarks of The American Institute of Architects. This draft was produced at 09:51:18 EDT on 06/27/2025 under Subscription No.20250121573 which expires on 04/23/2026, is not for resale, is licensed for one-time use only, and may only be used in accordance with the AIA Contract Documents® Terms of Service. To report copyright violations, e-mail docinfo@aiacontracts.com.
User Notes: (685c3d355a2b85e65d7f4843)

other party and to the Initial Decision Maker with a copy sent to the Construction Manager and Architect, if the Architect is not serving as the Initial Decision Maker. Claims by either party under this Section 15.1.3.1 shall be initiated within 21 days after occurrence of the event giving rise to such Claim or within 21 days after the claimant first recognizes the condition giving rise to the Claim, whichever is later.

§ 15.1.3.2 Claims by either the Owner or Contractor, where the condition giving rise to the Claim is first discovered after expiration of the period for correction of the Work set forth in Section 12.2.2, shall be initiated by notice to the other party. In such event, no decision by the Initial Decision Maker is required.

§ 15.1.4 Continuing Contract Performance

§ 15.1.4.1 Pending final resolution of a Claim, except as otherwise agreed in writing or as provided in Section 9.7 and Article 14, the Contractor shall proceed diligently with performance of the Contract and the Owner shall continue to make payments in accordance with the Contract Documents (other than any payment for Work which may be in dispute).

§ 15.1.4.2 The Contract Sum and Contract Time shall be adjusted in accordance with the Initial Decision Maker's decision, subject to the right of either party to proceed in accordance with this Article 15. The Architect will issue Certificates for Payment in accordance with the decision of the Initial Decision Maker.

§ 15.1.5 Claims for Additional Cost. If the Contractor wishes to make a Claim for an increase in the Contract Sum, notice as provided in Section 15.1.3 shall be given before proceeding to execute the portion of the Work that is the subject of the Claim. Prior notice is not required for Claims relating to an emergency endangering life or property arising under Section 10.4. Such notice shall include, to the extent then known by Contractor, full details and substantiating data to permit evaluation by the Owner, Architect and Construction Manager. If further, or other, information subsequently becomes known to the Contractor, it shall be promptly furnished to the Owner in writing. No Claims for increased costs, charges, expenses or damages of any kind shall be made by the Contractor against the Owner for any delays or hindrances from any cause whatsoever; provided that the Owner, in the Owner's discretion, may compensate the Contractor for any said delays by extending the time for completion of the Work as specified hereunder. Should the Contractor sustain any damage through any act or omission of any other contractor having a contract with the Owner or through any act or omission of any Subcontractor of said other contractor, the Contractor shall have no claim against the Owner for said damage.

§ 15.1.6 Claims for Additional Time

§ 15.1.6.1 If the Contractor wishes to make a Claim for an increase in the Contract Time, notice as provided in Section 15.1.3 shall be given. The Contractor's Claim shall include an estimate of cost and of probable effect of delay on progress of the Work. In the case of a continuing delay only one Claim is necessary.

§ 15.1.6.2 If adverse weather conditions are the basis for a Claim for additional time, such Claim shall be documented by data substantiating that weather conditions were abnormal for the period of time, could not have been reasonably anticipated and had an adverse effect on the scheduled construction.

§ 15.1.7 Waiver of Claims for Consequential Damages. The Contractor waives its Claims against the Owner for consequential damages arising out of or relating to this Contract. This waiver includes, but is not limited to, damages incurred by the Contractor for principal office expenses including the compensation of personnel stationed there, for losses of financing, business and reputation, and for loss of profit.

§ 15.2 Initial Decision

§ 15.2.1 Claims, excluding those where the condition giving rise to the Claim is first discovered after expiration of the period for correction of the Work set forth in Section 12.2.2 or arising under Sections 10.3, 10.4, and 11.5, shall be referred to the Initial Decision Maker for initial decision. The Architect will serve as the Initial Decision Maker, unless otherwise indicated in the Agreement. Except for those Claims excluded by this Section 15.2.1, an initial decision shall be required as a condition precedent to mediation of any Claim. Unless the Initial Decision Maker and all affected parties agree, the Initial Decision Maker will not decide disputes between the Contractor and persons or entities other than the Owner.

§ 15.2.2 The Initial Decision Maker will review Claims and within ten (10) days of the receipt of a Claim take one or

AIA Document A232 – 2019. Copyright © 1992, 2009, and 2019. All rights reserved. "The American Institute of Architects," "American Institute of Architects," "AIA," the AIA Logo, and "AIA Contract Documents" are trademarks of The American Institute of Architects. This draft was produced at 09:51:18 EDT on 06/27/2025 under Subscription No.20250121573 which expires on 04/23/2026, is not for resale, is licensed for one-time use only, and may only be used in accordance with the AIA Contract Documents® Terms of Service. To report copyright violations, e-mail docinfo@aiacontracts.com.
User Notes: (685c3d355a2b85e65d7f4843)

more of the following actions: (1) request additional supporting data from the claimant or a response with supporting data from the other party, (2) submit a schedule to the parties indicating when the Initial Decision Maker expects to take action, (3) reject the Claim in whole or in part, stating reasons for rejection, (4) recommend approval of the Claim by the other party, or (5) suggest a compromise. The Initial Decision Maker may also, but is not obligated to, notify the Contractor's surety, if any, of the nature and amount of the Claim.

§ 15.2.3 Omitted.

§ 15.2.4 If the Initial Decision Maker requests a party to provide a response to a Claim or to furnish additional supporting data, such party shall respond, within ten (10) days after receipt of the request, and shall either (1) provide a response on the requested supporting data, (2) advise the Initial Decision Maker when the response or supporting data will be furnished, or (3) advise the Initial Decision Maker that no supporting data will be furnished. Upon receipt of the response or supporting data, if any, the Initial Decision Maker will either reject the Claim in whole or in part or recommend approval of the Claim by the other party.

§ 15.2.5 If a Claim has been resolved, the Initial Decision Maker will prepare or obtain appropriate documentation.

§ 15.2.6 If a Claim has not been resolved, the party making the Claim shall, within ten (10) days after the Initial Decision Maker's preliminary response, take one or more of the following actions: (1) submit additional supporting data requested by the Initial Decision Maker, (2) modify the initial Claim or (3) notify the Initial Decision Maker that the initial Claim stands.

§ 15.2.7 If a Claim has not been resolved after consideration of the foregoing and of further evidence presented by the parties or requested by the Initial Decision Maker, the Initial Decision Maker, will notify the parties in writing that the Initial Decision Maker's decision will be made within seven (7) days. Prior to expiration of such time period, the Initial Decision Maker will render to the parties the Initial Decision Maker's written decision relative to the Claim, including any change in the Contract Sum or Contract Time or both. If there is a surety and there appears to be a possibility of a Contractor default, the Initial Decision Maker may, but is not obligated to, notify the surety and request the surety's assistance in resolving the controversy.

15.2.8 Omitted.

§ 15.2.9 In the event of a Claim against the Contractor, the Owner may, but is not obligated to, notify the surety, if any, of the nature and amount of the Claim. If the Claim relates to a possibility of a Contractor's default, the Owner may, but is not obligated to, notify the surety and request the surety's assistance in resolving the controversy.

§ 15.2.10 If a Claim relates to or is the subject of a mechanic's lien, the party asserting such Claim may proceed in accordance with applicable law to comply with the lien notice or filing deadlines.

§ 15.3 Alternative Dispute Resolution

§ 15.3.1 All Claims, disputes and other issues in question between (a) Contractor and (b) Owner and/or Construction Manager shall, except as otherwise expressly provided herein, as a condition precedent to litigation, first be subject to alternative dispute resolution ("ADR Procedures") as provided in this Section 15.3 regardless of (i) whether such matters relate to execution and progress of Work, or (ii) the extent to which the Work has been completed. Following receipt of a claim regarding a Dispute (as defined in Subparagraph 15.3.3.1 herein), Architect may comment on, and suggest a solution for, the Dispute. To assist Architect in this role, Owner and Construction Manager shall furnish information relating to the claim to the Architect, if requested by Architect, within ten (10) days of notification of the Dispute.

§ 15.3.2 ADR Procedures. Contractor, Owner and Construction Manager agree to exercise good faith efforts to resolve Disputes amicably and in a timely matter in accordance with a cooperative approach to problem-solving and, if mutual agreement is not achieved, by using negotiations and Mediation prior to submitting a Dispute to litigation, subject to the limitations described herein. If a Dispute is resolved by the cooperative process or an ADR Procedure, Architect will prepare or obtain appropriate documentation.

§ 15.3.3 Initial ADR Procedures. The parties agree to proceed with dispute resolution as provided herein:

AIA Document A232 – 2019. Copyright © 1992, 2009, and 2019. All rights reserved. "The American Institute of Architects," "American Institute of Architects," "AIA," the AIA Logo, and "AIA Contract Documents" are trademarks of The American Institute of Architects. This draft was produced at 09:51:18 EDT on 06/27/2025 under Subscription No.20250121573 which expires on 04/23/2026, is not for resale, is licensed for one-time use only, and may only be used in accordance with the AIA Contract Documents® Terms of Service. To report copyright violations, e-mail docinfo@aiacontracts.com.
User Notes: (685c3d355a2b85e65d7f4843)

.1 Definitions; Disputes Governed by this Paragraph 15.3; Priorities. A "Dispute" is a written demand that seeks relief in any form arising out of or relating to this Agreement, the Contract Documents or the Work, including, without limitation, all contract Disputes, statutory Disputes, equitable Disputes, and Disputes for extension of time.

.2 Procedure for Submitting a Dispute for Resolution; Time Limits. The Contractor, Owner or Construction Manager (as appropriate, the "Initiating Party") shall follow the procedure provided below in submitting a Dispute for resolution against the other party or parties (the "Responding Party"):

.1 The Initiating Party shall give written notice to the Responding Party of the basis for the Dispute within thirty (30) days after the Initiating Party first recognizes the condition giving rise to the Dispute, provided, however, that the Initiating Party shall use its best efforts to furnish the Responding Party and the other parties, as expeditiously as possible, with notice of any Dispute including, without limitation, those in connection with concealed or unknown conditions, once such Dispute is recognized, and shall cooperate with the Responding Party in an effort to mitigate the alleged or potential damages, delay or other adverse consequences arising out of the condition which is the cause of such a Dispute.

.2 The Initiating Party shall, within thirty (30) days after giving written notice to the Responding Party of the basis for the Dispute, prepare and provide the Responding Party with a written, detailed summary of the basis for the Dispute, together with all facts, documents, backup data, and other information supporting the Dispute.

.3 The Initiating Party shall designate and make any of its employees or agents having knowledge of the Dispute available to the Responding Party for questions, if and to the extent that the Initiating Party has control over such employees or agents.

.4 Within fourteen (14) days after receipt of the notice of Dispute, executives of the Initiating Party and the Responding Party who have authority to settle the Dispute and are senior to those persons who have direct responsibility for the matter outlined in the Dispute, along with other parties having knowledge of or an interest in the Dispute, shall meet at a mutually acceptable time and place in Cincinnati, Ohio, in a good faith effort to compromise and settle the Dispute.

.5 Failure or refusal of a party to follow the procedure for submitting a Dispute for resolution constitutes a waiver of the right to make a claim for the Dispute.

.3 Mediation. Unless delay in initiating or prosecuting a claim in litigation would irrevocably prejudice the Initiating Party or the Responding Party, any Dispute which is not resolved by direct discussions and negotiations as provided in Subsection 15.3.3.2 shall be submitted to Mediation under the Construction Industry Mediation Rules of the American Arbitration Association or such other rules as the parties may promptly agree to utilize. If the Initiating Party and the Responding Party cannot agree on the selection of a mediator within ten (10) days of the request for mediation, either party may immediately request the appointment of a mediator in accordance with the governing mediation rules. Mediation shall occur at any location to which the parties and mediator agree or, in the absence of agreement, at the location of the Project. Each party shall be responsible for an equal share of the mediation expenses.

.4 Timely Resolution. The parties agree to conduct and conclude Mediation proceedings under this Section 15.3 within sixty (60) days from the designation of the mediator. In the event that mediation proceedings do not resolve the claim within such period, either party may initiate other means of dispute resolution with respect to the Claim or Dispute. Notwithstanding any other provision herein, no Dispute shall be subject to any form of arbitration.

§ 15.3.4 No Prejudice to Rights or Remedies. Provided the parties have complied with the requirements for giving notice of the existence of a Dispute, no delay in disposing of such Dispute while the parties pursue resolution as provided by this Section shall prejudice the rights of either party; however, nothing contained in this Section shall be deemed to relax any requirement contained elsewhere in the Agreement for the giving of notice between the parties.

AIA Document A232 – 2019. Copyright © 1992, 2009, and 2019. All rights reserved. "The American Institute of Architects," "American Institute of Architects," "AIA," the AIA Logo, and "AIA Contract Documents" are trademarks of The American Institute of Architects. This draft was produced at 09:51:18 EDT on 06/27/2025 under Subscription No.20250121573 which expires on 04/23/2026, is not for resale, is licensed for one-time use only, and may only be used in accordance with the AIA Contract Documents® Terms of Service. To report copyright violations, e-mail docinfo@aiacontracts.com.
User Notes: (685c3d355a2b85e65d7f4843)

§ 15.3.5 Jurisdiction and Venue. Owner and Contractor agree that, subject to those claims, counterclaims, disputes and other matters in question between the parties that are resolved pursuant to Sections 15.3.1 thru 15.3.5, all other actions or proceedings arising in connection with this Agreement shall be tried and litigated only in state courts located in the County of Hamilton, State of Ohio having subject matter jurisdiction over the matter in controversy. The parties further agree that this choice of venue is to be considered mandatory, and not permissive in nature, thereby precluding the possibility of litigation in any venue or jurisdiction other than that specified in this Section 15.3.5. The parties agree that any final judgment rendered in any such action or such proceeding as provided herein shall be conclusive as to the subject matter of such final judgment, subject only to any right of appeal provided by the laws of the State of Ohio, and that once any such right of appeal has been exhausted or waived, such final judgment may be enforced in other jurisdictions in any manner provided by law.

ARTICLE 16 SUPREMACY OF APPLICABLE LAW; REFORMATION OF CONTRACT DOCUMENTS

§ 16.1 It is the intent of Owner and Contractor that the Contract Documents comply, in all manners of form and substance, with the requirements of Chapter 153 of the Ohio Revised Code and other applicable law with respect to contracts for public improvements. In the event of any ambiguity, inconsistency or conflict between the any provision contained herein or in the Contract Documents and the requirements of applicable governing law, the requirements of applicable governing law shall control in all respects, and any such offending provision contained in the Contract Documents shall be deemed redrafted and reformed to the extent necessary to comply with applicable governing law.

DRAFT

AIA Document A232 – 2019. Copyright © 1992, 2009, and 2019. All rights reserved. "The American Institute of Architects," "American Institute of Architects," "AIA," the AIA Logo, and "AIA Contract Documents" are trademarks of The American Institute of Architects. This draft was produced at 09:51:18 EDT on 06/27/2025 under Subscription No.20250121573 which expires on 04/23/2026, is not for resale, is licensed for one-time use only, and may only be used in accordance with the AIA Contract Documents® Terms of Service. To report copyright violations, e-mail docinfo@aiacontracts.com.
User Notes: (685c3d355a2b85e65d7f4843)

General Liability

OCIP Manual

Stadium Renovations for Paycor Stadium

1 Paycor Stadium

Cincinnati, Ohio 45202

V2. March 18, 2026

Table of Contents

1.0 INTRODUCTION 3

1.1 About this Manual 4

2.0 DIRECTORY 5

3.0 DEFINITIONS 6

4.0 OCIP INSURANCE COVERAGE 8

4.1 Description of OCIP Coverages 8

4.2 Evidence of OCIP Coverages 8

4.3 OCIP Termination or Modification 8

4.4 OCIP Insurance Premiums 9

5.0 ENROLLED & EXCLUDED PARTIES REQUIRED COVERAGE 10

6.0 ENROLLED & EXCLUDED PARTIES RESPONSIBILITIES 10

6.1 Alliant WrapX 12

6.2 Enrollment 12

6.3 Change Order Procedures 12

6.4 Closeout Procedures 13

7.0 CLAIMS PROCEDURES 14

7.1 Liability Claims 14

7.2 Workers Compensation Claims 14

7.3 Property and Builder's Risk Claims 14

7.4 Automobile Claims 15

7.5 Pollution Claims 15

8.0 APPENDIX/FORMS 16

SECTION 1

1.0 INTRODUCTION

The Board of County Commissioners, Hamilton County, Ohio, has arranged for the Stadium Renovations on the Paycor Stadium ("Project") to be insured under its Owner Controlled Insurance Program (OCIP). An OCIP is an insurance program that insures:

- The Board of County Commissioners, Hamilton County, Ohio, Cincinnati Bengals, Inc. (Team), Paul Brown Stadium Ltd., (Manager) Messer Construction Company (Construction Manager), Jostin Construction, Inc,. M.B.J. Consultants, Inc., and Warm Construction LLC (Construction Manager), (collectively the "OCIP Parties") and
- Any individual, firm, or corporation undertaking construction or other services under a Contract with OCIP Parties or their Construction Manager, Contractor or Subcontractor (collectively the "Contractor Parties") of any tier to furnish labor, services, materials and/or equipment, and/or perform operations at the Project Site that has been Enrolled in the OCIP .

Certain Contractor Parties are excluded from this program and are identified in Section 3 of this OCIP Manual.

Participation in the program is mandatory but not automatic.

The OCIP provides the following insurance coverages for all Enrolled Parties:

- General Liability
- Excess Liability
- **There is no Workers Compensation under the OCIP.**

OCIP Parties will pay insurance premiums for the OCIP coverage described in this Manual. You should notify your insurance broker/insurer(s) of the coverages provided under this Program for "On-Site" activities to avoid the duplication of coverage and the related costs.

The OCIP Parties have elected to implement a Bid Net Program. Each bidder is required to exclude from its bid price its normal cost for insurance coverage.

This OCIP Manual will be a part of the bid specifications and bidders are expected to be familiar with the requirements prior to submitting their bid. In addition, this OCIP Manual will be incorporated by reference into the successful bidders awarding Contract and accordingly, all provisions require mandatory compliance.

Contractor Parties shall not commence work at the Project Site until:

a) If enrolled under this OCIP, having received a certificate of insurance issued by Alliant Insurance Services (OCIP Administrator), or
b) If excluded under this OCIP, having provided a certificate of insurance as required in this OCIP Manual.

NOTE: Insurance coverages and limits provided under the OCIP Insurance Policies are limited in scope and are specific to work performed after the inception date of your enrollment into this program. Your insurance representative should review this information. Any additional coverage you may wish to purchase will be at your option and expense.

1.1 About this Manual

This OCIP Manual was prepared by Alliant Insurance Services (Alliant) and OCIP Parties. Alliant is the insurance broker and OCIP Administrator for this program.

This OCIP Manual:	This OCIP Manual does not:
Generally describes the OCIP	Provide coverage interpretations
Identifies responsibilities of the various parties involved in the Project with regards to the OCIP	Provide complete information about coverage
Provides a *basic* description of OCIP coverage	Supersede the terms of the OCIP Insurance policies
Describes audit and administration procedures for the OCIP	Provide answers to specific claims questions
Provides answers to basic questions about the OCIP	

Specific questions about the OCIP, its administration, or the coverage provided should be referred to the OCIP Program Manager identified in the Project Directory section immediately following this introduction.

NOTE: The information in this OCIP Manual is intended to outline the OCIP Program. If any conflict exists between this OCIP Manual and the provisions of the Contract between the Program OCIP Parties and the Contractor Parties and/or the OCIP Insurance Policies, the Contract and the Policies will govern. This OCIP Manual may be updated and distributed (via the online WrapX Portal) during the course of the Project. Any revised versions shall replace and supersede any previously issued versions.

SECTION 2

2.0 DIRECTORY

OCIP Parties	Board of County Commissioners, Hamilton County, Ohio Cincinnati Bengals, Inc. Paul Brown Stadium LTD. Messer Construction Company Jostin Construction, Inc. M. B. J. Consultants, Inc. Warm Construction, LLC
Project Address	1 Paycor Stadium Cincinnati, Ohio 45202
Hamilton County BOCC Construction Manager	Messer Construction Company
Hamilton County Contracts	Kerry Dowling Phone: 513.946.3015 Email: kerry.dowling@hcpros.org
Cincinnati Bengals Construction Manager	Warm Construction LLC
OCIP Administrator	Alliant Insurance Services, Inc. Construction Services Group
Program Manager	Lois Nettles Phone: 561.273.2317 Email: Lois.Nettles@alliant.com
Program Administrator	Jennifer Clarke Phone: 561.214.6378 Email: Jennifer.Clarke @alliant.com
Claims Advocate Lead	Marc Reyes Phone: 470.433.1233 Email: Marc.Reyes@alliant.com
Claims Advocate	MaryBeth Roache Phone: 727.415.6367 Email: MaryBeth.Roache@alliant.com
OCIP Portal	Alliant WrapX
OCIP Document Submission	**(SEE SECTION 8 FOR DETAILS)** Email: alliantwrapx@alliant.com
Online Enrollment Payroll Reporting Document Mgmt	**ONLINE ENROLLMENT, PAYROLL REPORTING & DOCUMENT MGMT** Website: http://alliantwrapx.alliantinsurance.com/contractorportal *Contact [Program Admin] for User Access

3.0 DEFINITIONS

OCIP Parties	Board of County Commissioners, Hamilton County, Ohio Cincinnati Bengals Paul Brown Stadium LTD, LLC Messer Construction Company Jostin Construction, Inc. M. B. J. Consultants, Inc. Warm Construction, LLC
Additional Insureds	The following OCIP Parties, and each of their respective parents, members, affiliates, lenders, directors, officers, representatives, agents, and employees, and all other parties reasonably requested by the OCIP Parties. • Board of County Commissioners, Hamilton County, Ohio • Cincinnati Bengals • Paul Brown Stadium LTD, LLC • Messer Construction Co. • Jostin Construction, Inc. • M. B. J. Consultants, Inc. • Warm Construction, LLC • KZF Design, Inc.
Bid Net Program	Contractor Parties who ultimately will be enrolled in the OCIP are required to exclude their General Liability and Excess Umbrella insurance cost from their bid price, Contract value and change orders.
OCIP Insurance Policies	Shall mean the General Liability and Excess Liability insurance procured by the OCIP Parties in connection with the OCIP.
OCIP Insurance Manual	Shall mean this OCIP Manual.
Contract	The written agreement between the OCIP Parties and the Contractor Parties including all lower tier subcontractors.
Contractor Party(ies)	Any individual, firm, or corporation undertaking construction or other services under a Contract with OCIP Parties or their Construction Manager, Contractor or Subcontractor (Contractor Parties) of any tier to furnish labor, services, materials and/or equipment, and/or perform operations at the Project Site. Unless otherwise noted, anywhere in this manual where “Contractor Parties” is used shall also apply to Contractors, Trade Contractors, and Subcontractors of every tier..
Owner Controlled Insurance Program (OCIP)	An insurance program under which General Liability and Excess Liability insurance are procured by the OCIP Parties to cover the OCIP Parties, and all Enrolled Parties while performing work at the Project Site.
Enrolled Parties	Contractor Parties who been awarded work and met the requirements to become enrolled in the OCIP as evidenced by a Certificate of Insurance issued by the OCIP Administrator. OCIP Parties may, at its discretion, include a Contractor Party who, otherwise by definition, would be an Excluded Party.
Excluded Parties	Excluded Parties are not covered by the OCIP and are described as those performing the following activities: • Any Contractor Party performing environmental or pollution related activities for the purpose of remediation, testing, removing, or storing any known or unknown pollutant;

	• Professional service providers not engaged in construction work including but not limited to, architects, engineers, geotechnical professionals, surveyors, attorneys and real estate brokers • Any person or entity that solely fabricates and/or manufactures any products, materials and/or supplies away from the Project Site. • Manufacturers, fabricators, suppliers, or distributors of materials that performs no work at the Project Site; • Vendors, Suppliers, Fabricators, Material Dealers, Truckers, Haulers, Owner/Operators (Independent Contractors), Drivers and others whose operation(s) and/or employee(s) is/are engaged solely in the loading, hauling and/or unloading of material, supplies and/or equipment to or from the Project Site; • Contractor Parties who do not perform any actual labor on the Project Site; • Any Contractor Party that is contracted with solely for the purpose of erection, operation of or dismantling a crane of any kind unless such operation is specifically scheduled to the policies; • Any other parties with which the OCIP Parties at its sole discretion, or through the OCIP Administrator, elects to exclude from the OCIP, even if otherwise eligible.
Insured	OCIP Parties and all Enrolled Contractor Parties named as an Insured on the OCIP Certificates of Insurance.
Insurer(s)	Insurance companies that provide coverage for the OCIP:
Off-Site	Shall mean away from the Project Site. If locations are used solely in connection with performing work at the Project Site like storage yards, staging areas, Off-Site parking, field offices, etc., they can be added with the approval of the OCIP Parties and Insurer(s).
On-Site	Shall mean at the Project Site.
Project Site	Paycor Stadium Project located at 1 Paycor Stadium Cincinnati, Ohio 45202. Coverage will also apply to all work or operations within 2000 feet of the designated project that arise out of or necessary and incidental thereto. This shall not include operations at the Enrolled Parties regularly established workplace, plant, factory, office, shop, warehouse, yard or other property, even if such operations are for fabrication of materials to be used at the Project Site.
Substantial or Final Completion	Shall be defined by the Contract.
Unenrolled Parties	Excluded parties or parties eligible for enrollment who (a) OCIP Parties has elected not to enroll or (b) have not properly completed the enrollment process. References in this manual to “Unenrolled Parties” shall also mean “Excluded Parties”

SECTION 4

4.0 OCIP INSURANCE COVERAGE

OCIP Parties intend to maintain General Liability and Excess Liability coverages until Substantial Completion; however, but in no event beyond the expiration date of the OCIP policies. Products/Completed Operations Extension is for the lesser of ten (10) years or the applicable Statute of Repose per policy terms and conditions. In addition, this program includes an Extension of Coverage in the event Enrolled Parties return to the Project Site to perform repair work, as defined by the policy.

The descriptions on these pages provide a summary only, please refer to the policies for actual terms & conditions. Copies of policies are available upon request.

4.1 Description of OCIP Coverages

The OCIP provides No Workers Compensation Coverage

COMMERCIAL GENERAL LIABILITY

	Limits of Liability Shared by All Insureds
General Aggregate (Reinstates one time at 30 months)	$4,000,000
Products/Completed Operations Aggregate	$4,000,000
Personal/Advertising Injury	$2,000,000
Each Occurrence Limit	$2,000,000
Damage to Premises Rented – Each Loss	$100,000
Negligent Contractor Party's Financial Responsibility - Each Occurrence See Section 7 for Details	$ 25,000

- A single General Liability policy, written on an occurrence basis, will be issued covering all insureds; limits shared by all Insureds
- Products/Completed Operations Aggregate is a single limit for the entire policy term, including the Products/Completed Operations Extension period
- Defense Cost is in addition to the limits
- Cross Suits Exclusion with Owner/General Contractor exception

EXCESS LIABILITY

	Limits of Liability Shared by All Insureds
Each Occurrence Limit	$ 100,000,000
General Aggregate Limit	$ 100,000,000

A single aggregate applies during the entire Completed Operations Period.

4.2 Evidence of OCIP Coverages

The OCIP Administrator will provide a Certificate of Insurance evidencing General Liability and Excess Liability insurance to each Enrolled Party, each of whom will be a named insured on the policy.

4.3 OCIP Termination or Modification

Notwithstanding any other provision of this OCIP Manual, it is the OCIP Parties' intent to keep the OCIP in force throughout the term of the Project. However, the OCIP Parties reserve the right to cancel, terminate or modify the OCIP. To exercise this option prior to program expiration, the OCIP Parties will provide 15 calendar days advance, written notice to all Insureds covered under the OCIP.

Enrolled Parties will be required to immediately effect replacement insurance coverage, equivalent to what is currently required for Unenrolled Parties. Written evidence of such insurance must be provided to the OCIP Parties prior to the actual cancellation or termination date of the OCIP.

4.4 OCIP Insurance Premiums

The OCIP Parties is responsible for the payment of the OCIP Premium. All return insurance premiums, insurance dividends, or monies due to or to become due in connection with the OCIP shall be to the benefit of the OCIP Parties and are hereby assigned to the OCIP Parties.

5.0 ENROLLED & UNENROLLED PARTIES REQUIRED COVERAGE

Enrolled parties and Unenrolled parties of every tier are required to maintain insurance as dictated by the Contract including the OCIP Exhibit.

Please submit proof of insurance to the OCIP Administrator to comply with the contract's insurance requirements.

Specific language and limits should match the requirements set forth in the Contract. Copies of all required additional insured, primary and non-contributory, waiver of subrogation, and notice of cancellation endorsements shall be attached to the certificate. Renewal certificates shall be provided 30 days prior to the expiration date of each policy.

If and to the extent an Unenrolled Party or Excluded Party's commercial general liability policy contains, or is endorsed with, an exclusion relating to wrap-up or controlled insurance programs, such exclusion shall be limited to projects or locations where the insured is an enrolled party in a wrap-up or controlled insurance program. ISO endorsements CG 21 31 05 09 and CG 21 54 01 96, which purport to remove coverage at all projects or locations where the insured is 'involved' in a project with a wrap-up or controlled insurance program in place, are not acceptable.

Contractor Parties' policies may not contain any exclusions related to the scope of work performed of the project type (i.e., residential exclusions, height restrictions, etc.)

All Contractor Parties are responsible for monitoring their lower tier Contractor Parties' (Enrolled, Unenrolled, Excluded Parties') Certificates. The OCIP Parties reserves the right to disapprove the use of Contractor Parties unable to meet the insurance requirements.

6.0 ENROLLED & UNENROLLED PARTIES RESPONSIBILITIES

The Contractor Party is required to cooperate with OCIP Parties and OCIP Administrator in all aspects of OCIP operation and administration.

RESPONSIBILITIES OF CONTRACTOR PARTIES INCLUDE BUT ARE NOT LIMITED TO:

- **Notifying the OCIP Administrator of all Subcontracts awarded**
- Enrollment in the OCIP, if eligible
- Providing each lower-tiered Contractor Party with a copy of the OCIP Manual during the Bid Process and as part of the Subcontracts.
- Upon award, completion of all OCIP Enrollment forms and back up documents
- Ensuring that all lower-tiered Contractor Parties are Enrolled in the OCIP, with the exception of those lower-tiered Contractor Parties that are Excluded or identified by the OCIP Parties to be Unenrolled
- Reviewing and understanding coverages, exclusions, and limitations of OCIP policies
- Including OCIP provisions in all Subcontracts
- Providing timely evidence of insurance to the OCIP Administrator
- Cooperating with the OCIP Administrator's requests for information
- Complying with insurance, claim and safety procedures
- Notifying the Safety Manager and OCIP Parties' Representative of all On-Site incidents immediately
- Paying any Financial Responsibilities promptly as required
- Notifying the OCIP Administrator of completed Subcontracts prior to Contract closeout.
- Notifying the OCIP Administrator immediately of any insurance renewal, cancellation, or non-renewal (Enrolled & Unenrolled Parties Required Coverage)
- Assisting with lower-tiered Contractor Parties' compliance with all OCIP requirements
- Monitoring its lower-tiered Contractor Parties' Certificates of Insurance
- Safety - Each Contractor Party of every tier is required to establish a written Safety Program which meets or exceeds the OCIP Parties' Project Safety Standards.
- OCIP Parties or its loss control representatives have the right to "Stop Work" when serious defective conditions, unsafe work activities, or life-threatening hazards are identified. If deemed necessary, OCIP Parties may remove any Contractor Party or lower-tiered Contractor Party employees that violate these requirements.

NOTE: Contractor Parties of every tier acknowledge that OCIP Parties and the OCIP Administrator are not agents, partners, or guarantors of the insurance companies providing the OCIP Policies, that OCIP Parties or OCIP Administrator is not responsible for any claims or disputes between or among OCIP Parties and the Contractor Parties and any OCIP Insurer(s), nor do they guarantee the solvency, or the availability of limits, of any OCIP Insurer(s).

6.1 Alliant WrapX

Alliant WrapX (WrapX) is a proprietary Risk Management Information System (RMIS). All relevant OCIP information will be captured and stored online in a "paperless" format through WrapX. Information to be stored includes Notice of Subcontract Award, Enrollment information, Certificates of Insurance, OCIP payroll, and Notice of Work Completion for all Contractor Parties on a per Contract basis. Alliant will provide all OCIP Enrolled Parties with an email detailing instruction for utilizing the WrapX Contractor Portal upon receipt of a Notice of Subcontract Award for the Awarded Contractor Party.

Submission of all OCIP related documents should be sent by e-mail to:

alliantwrapx@alliantinsurance.com

If you should have any questions or require additional information about this process or other matters related to the OCIP, please contact your OCIP Administrator identified in Section 2 of this OCIP Manual.

6.2 Enrollment

Enrollment into the OCIP is required but not automatic. Contractor Parties must complete the Enrollment online (see instructions in Section 8) and participate in the enrollment process for the OCIP coverage to apply. Access to the Project Site will ***not*** be permitted until the Enrollment is completed and approved by the OCIP Administrator.

Each Contractor Party shall provide details about its lower-tiered Contractor Parties to the OCIP Administrator so that they may facilitate enrollment of all lower-tiered Contractor Parties as well. Each lower-tiered Contractor Party is responsible to complete a separate Notice of Subcontract Award to obtain coverage under the OCIP.

A separate Online Enrollment is required for each Contract for which you are performing Work.

Each Contractor Party who is enrolled into the OCIP will receive a Certificate of Insurance from Alliant Insurance Services, Inc. and a Project Welcome Letter acknowledging that they have been enrolled into the OCIP.

Contractor Party Bids

Contractor Parties are required to exclude from their bid price for original scope of work and subsequent change orders, the costs for insurance that OCIP Parties will provide to all Enrolled Parties under the OCIP for work performed at the Project Site. The OCIP Administrator can help with your estimate, as well as provide assistance to your own insurance representative to ensure your insurance carriers do not charge for coverage provided under the OCIP.

Notice of Subcontract Award

The enrollment process begins with the Notice of Subcontract Award. Each hiring Contractor Party must complete a Notice of Subcontract Award form (see form in Section 8) for all lower tiered Contractor Parties hired**.** A separate form is required for each Contract awarded for which Contractor Party is performing work. This form must be completed and submitted to the OCIP Administrator prior to mobilization.

Once the Notice of Subcontract Award has been processed by OCIP Administrator, Contractor Party will receive an email providing access to the WrapX system and instructions on how to complete the online enrollment process.

Notice of Work Completion

When Enrolled Parties have completed their work On-Site and/or no longer have employees performing work at the Project Site, then Enrolled Parties shall complete a Notice of Work Completion Form (which must include any final project related payroll and/or receipts, as applicable) and submit it via the Alliant WrapX portal (see form in Section 8) or directly to OCIP Administrator. It is the Contractor Parties' responsibility to assure that each of their lower-tiered Contractor Parties complete this form. This form must be completed separately for each Contract.

6.3 Change Order Procedures

Change orders will also be priced by the Contractor Party to exclude from their change order bid, the Cost of Insurance for the coverages that are provided by OCIP Parties.

6.4 Closeout Procedures

The closeout process is triggered by receipt of a completed Notice of Work Completion Form, which must be submitted to the OCIP Administrator along with a current Certificate of Insurance.

Final payment will not be released by OCIP Parties until all necessary forms have been submitted to and approved by the OCIP Administrator. Any unpaid penalties for which the Contractor Party or lower-tiered Contractor Party is responsible, will be considered at the time of closeout.

7.0 CLAIMS PROCEDURES

All Enrolled Parties are to report all injuries, occupational-related illnesses or property damage to the Project Safety Manager immediately. All Parties will instruct employees and other personnel to report, in writing, by the end of the business day, all Accidents and Occurrences of any type to the Project Safety Manager or Project Superintendent.

7.1 Liability Claims

Incidents at or around the Project Site resulting in damage to Property of others (other than your own Work product, i.e., the public, tenants, and visitors), or personal injury or death to a member of the public, must be reported immediately to the Project Safety Manager, Alliant Claims Advocate and the OCIP Administrator. Complete and deliver an Incident Report to the OCIP Administrator within 24 hours of the Incident.

Do not voluntarily admit liability. Cooperate with the OCIP Parties or the Alliant Claims Advocate in the incident investigation.

In the event Enrolled Parties receive a lawsuit involving construction defect or related allegations that relates to the construction Project with which they are enrolled, the original document along with any service of suit documents shall be sent to:

ALLIANT CLAIMS ADVOCATE LEAD: MARC REYES
EMAIL: MARC.REYES@ALLIANT.COM
PHONE: 470.433.1223

ALLIANT CLAIMS ADVOCATE: MARYBETH ROACHE
EMAIL: MARYBETH.ROACHE@ALLIANT.COM
PHONE: 727.415.6367

NEGLIGENT CONTRACTOR PARTIES' FINANCIAL RESPONSIBILITY

In the event of an occurrence that causes Property Damage, arising out of the performance of an Enrolled Parties work, the Enrolled Party shall promptly, upon request, pay its share of the cost $25,000 per occurrence. In the event that a loss arises due to an occurrence with multiple Contractor Parties or lower-tiered Contractor Parties, the amount shall be paid per capita by the involved Contractor Parties or lower-tiered Contractor Parties. The OCIP Parties may collect such amount via a deductive change order and/or check.

If a lower-tiered Contractor Party is found negligent, the hiring Contractor Party shall be solely responsible for obtaining reimbursement for the cost of such financial responsibility from the lower-tiered Contractor Party(s) attributable to their acts of omissions.

7.2 Workers Compensation Claims

No coverage is provided for Workers Compensation incidents under the OCIP. It is the sole responsibility of each Contractor Party to report incidents/claims involving injury to their employees to their own insurers.

However, all incidents occurring in or around the Project Site must be reported to the Project Safety Manager and your Workers Compensation insurer.

7.3 Property and Builder's Risk Claims

Per Section 5, there is no coverage provided for Contractor Party's property. It is the sole responsibility of each Contractor Party to insure and report incidents/claims involving their property to their own insurers.

Where the OCIP Parties or Project Owner provides Builders' Risk for the project, Contractor Parties of every tier shall be responsible for deductibles for losses relating to/resulting from their negligent acts. If a lower-tiered

Contractor Party is found negligent, the hiring Contractor Party shall be solely responsible for obtaining such deductible from the lower-tiered Contractor Party(s) attributable to their acts of omissions.

However, all incidents occurring in or around the Project Site must be reported to the Project Safety Manager.

7.4 Automobile Claims

No coverage is provided for automobile incidents under the OCIP. It is the sole responsibility of each Contractor Party to report incidents/claims involving their automobiles to their own insurers.

HOWEVER, all incidents occurring in or around the Project Site must be reported to the Project Safety Manager. Incident investigations will occur and focus on liability arising out of the Project Construction activities that could result in future claims (i.e. due to the conditions of the roads, etc.). Each Contractor Party shall cooperate in the investigation of all automobile incidents.

7.5 Pollution Claims

Contractor Parties performing environmental remediation work are required to carry Contractor's Pollution Liability insurance that is primary and non-contributory to any coverage under the OCIP Parties' OCIP. All Parties shall report claims by immediately notifying the Project Safety Manager of any known or suspected pollution incidents.

All Incidents occurring in or around the Project Site MUST be reported

SECTION
8

8.0 APPENDIX/FORMS

- Notice of Subcontract Award – **ONLINE SUBMISSION**

  To be completed by All Awarding Contractor Parties for their lower-tiered Contractor Parties

- Certificate of Insurance and Endorsements – **ONLINE SUBMISSION**
- Notice of Work Completion – **ONLINE SUBMISSION**
- Contractor Parties Incident Report
- **SAMPLE** Certificate of Insurance

For assistance in getting access to the online system or with completing these forms, please contact:

Program Administrator
Alliant Insurance Services
Phone: 561.214.6378
Email: Jennifer.Clarke@alliant.com

Alliant WrapX Enrollment Process

- **Enrollment into the Project will be online via the Contractor Portal**
- **Initial Certificate of Insurance uploaded into the Contractor Portal**
- **Upon completion of enrollment, a confirmation of enrollment and OCIP Certificate of Insurance will be issued by the OCIP administrator.**
- **You will receive access to the online system: Alliant WrapX, within three business days of Alliant being notified of your awarded Contract**
- **Please contact the OCIP Administrator if you have not been given a login ID and Password**
- **Link to the Contractor Portal: https://alliantwrapx.alliantinsurance.com/ContractorPortal**
- **Renewal certificates of insurance may be uploaded by Contractor Party or sent to alliantwrapx@alliantinsurance.com**

Alliant WrapX Enrollment Process

Access Contractor Portal

An account will be created for all users upon submittal of Notice of Award (NOA). *If you are already registered, log in and proceed to Completing Enrollments on the next page.* Open the Alliant WrapX Contractor Portal URL in a web browserhttps://alliantwrapx.alliantinsurance.com/ContractorPortal/ The Alliant WrapX Contractor Portal login screen will be displayed.

How to Log In

Once at the WrapX home page:

- Contact the CIP Administrator to obtain a **User Name**.
- Enter your unique **User Name** and enter your **Password**.
- Click on the LOGIN button to gain access to the secure WrapX Contractor Portal.
- Please note that the first time you log on you will be requested to change your password.
- If you forgot your password, click on "Forgot Password" and a temporary password will be emailed to you.

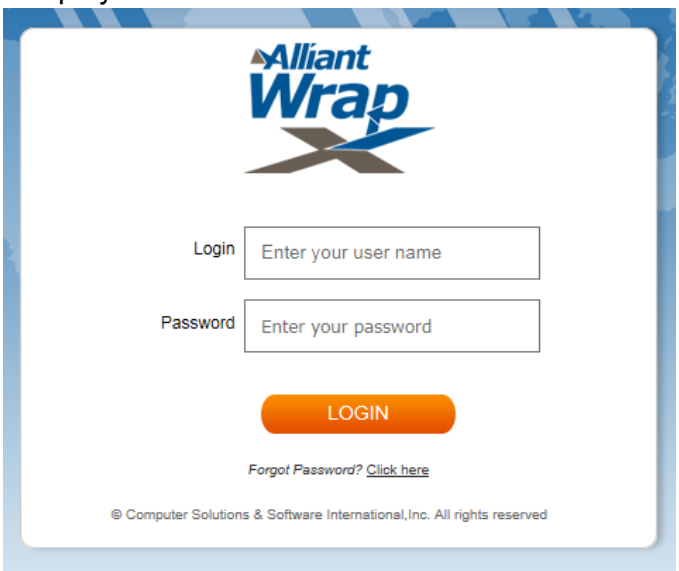

Forgot User Name or Reset Password Screen:

If you have forgotten your user name or you need to change your password because you have been sent a temporary password, because you have forgotten your password, or your password has expired, you can change your password by using the following instructions. After signing in to the Contractor Portal, click Password in the upper right of the screen and complete the required fields: Previous or Old password, new password, confirmation of new password.

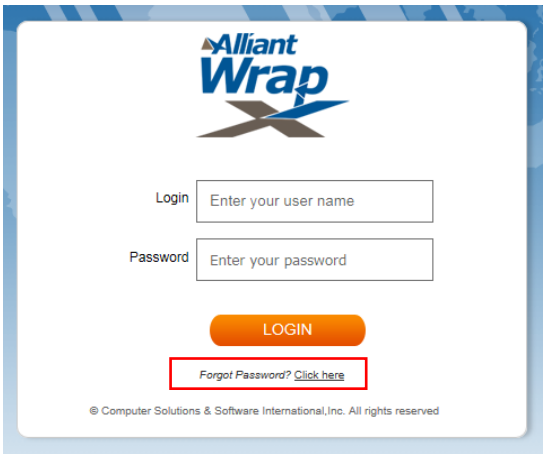

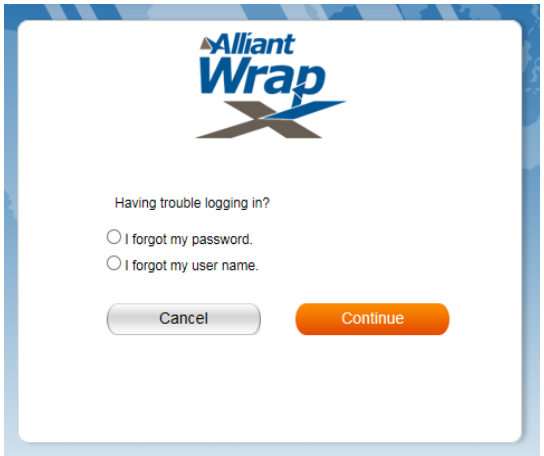

Once all required information has been submitted (ex: email address and/or user name), temporary credentials will be directly sent to contractor. If a temporary password is not received within a few minutes, please check your spam folder or reach out to CIP Administrator.

Completing Enrollments

- To review your newly tracked contracts and enroll, from the Welcome Page use the **Awarded Contracts** section.
- To review your previously enrolled contracts, from the Welcome Page use the **Enrolled Contracts** section.

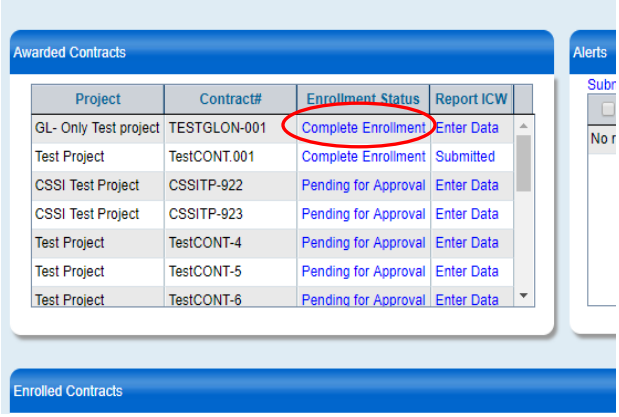

Click on **Complete Enrollment** to begin the process. The enrollment wizard will start on the Review page. Any section that is not compliant will be listed in **RED**.

Click "Edit" to begin updating that section, and continue through the enrollment wizard by clicking "Next"

Required Information for Enrollment		
Item		**Help**
1	**Contractor name**	May include type of company: Corporation, LLC, etc.…
2	**Parent contractor name**	Name of company you are contracted with
3	**Contractor Federal ID Number**	Check Alliant data and update
4	**Start Date at project site**	Day physical work starts at jobsite
5	**Contract Value**	
6	**Contract Description**	Scope of work
7	**Contractor Address**	Physical address of office. Any P.O. Box should be entered under Mailing address
8	**Contractor Main Phone and Fax numbers**	
9	**Contractor Primary Contact Name**	
10	**Contact position**	
11	**Contact phone and fax numbers, and email address**	Email is preferred method for communication
12	**Contractor Payroll Contact Name**	Applicable only If Payroll is required – N/A for GL only CIP
13	**Payroll Contact phone and fax numbers, and email address**	Applicable only If Payroll is required – N/A for GL only CIP

- To submit your Signature and Signature Date:
  - Go to the **Review** page under the **Enrollment Wizard**
  - Check the **Verification box**
  - Click **Submit**

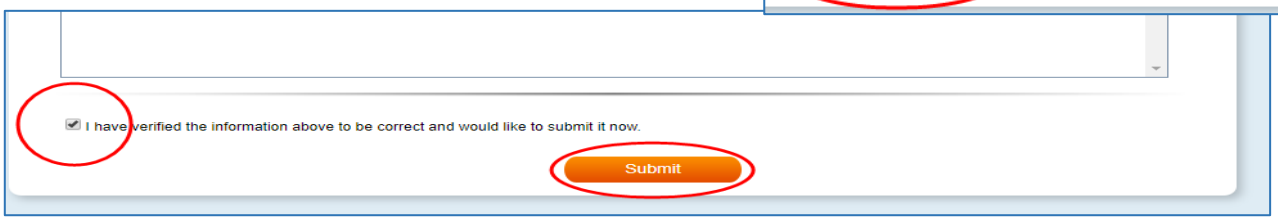

Alliant WrapX Notice of Award Process

- Notice of Award (NOA) is required to be submitted by a contractor subcontracting out any work at https://alliantwrapx.alliantinsurance.com/ContractorPortal
- **NOA is required for any contractor whether contractor is an Enrolled or Excluded Party.**
- Please contact the CIP Administrator if you have not been given a login ID and Password.
- After logging into the system, find your contract under the Enrolled Contracts window.
- Click on "**Add Subcontract**" to begin the process

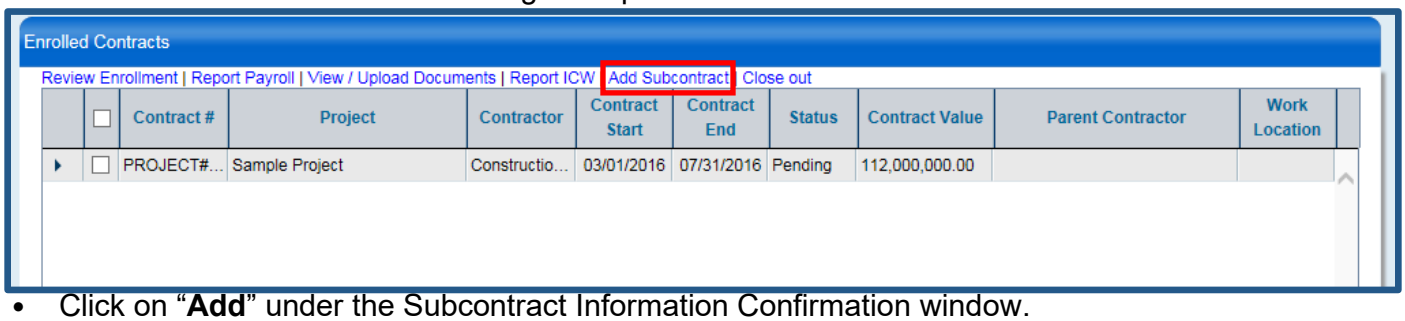

- Click on "**Add**" under the Subcontract Information Confirmation window.

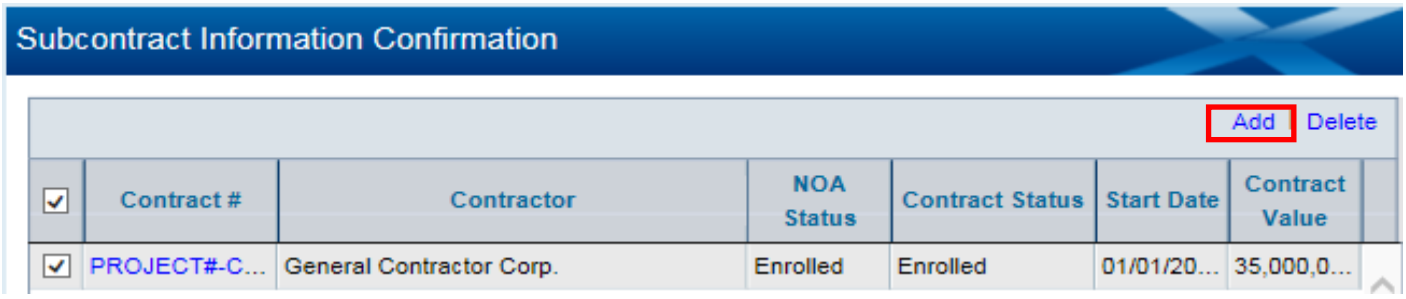

- You will then be directed to the Subcontract Information Section where all of your Contractor Party's Company Information should be entered.

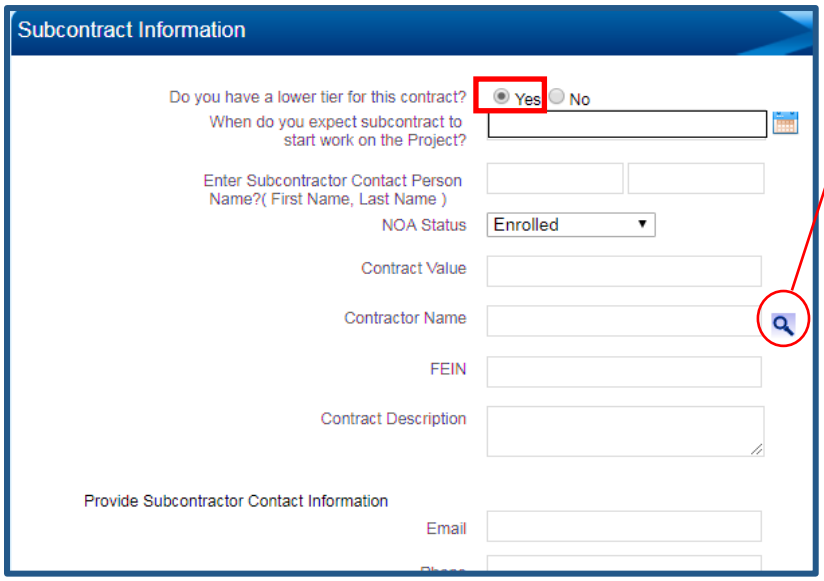

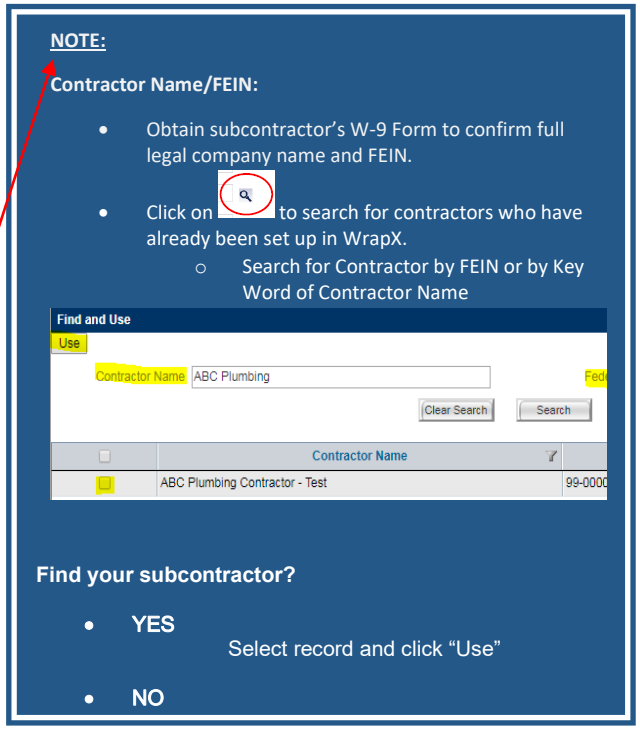

- After clicking "Next", you will be taken back to the "Subcontract Information Confirmation" page where your newly added subcontract will be listed.

After NOA submission, Alliant CIP Administrator will reach out to your Contractor Party for enrollment

PAYCOR STADIUM PROJECT

NOTICE OF CONTRACTOR PARTY AWARD

(In lieu of completing this form, Awarding Contractor may enter this information via the Contractor Portal)

Date: _____

Awarding Contractor: _____

Contractor Party Name/Title: _____

Contractor Party Phone: _____ **Email Address:** _____

A subcontract has been awarded as follows:

☐ **Contractor Party to be Enrolled** ☐ **Contractor Party to be Excluded**
(Meets "Excluded Parties" definition in this manual; subject to OCIP Parties approval)

Contract # _____

Federal ID#: _____

Contractor Party Address: _____

_____

Contact Person: _____

Phone Number: _____ **Email Address:** _____

Date Awarded: _____ **Contract Value:** _____

Estimated Self-Performed Value or % _____

Estimated Start Date: _____ **Estimated Completion Date:** _____

Description of Work: _____

Anticipated Lower-tiered Contractor Parties: _____

Lower-tiered Contractor Parties Work to be performed: _____

Coverages (in addition to WC, GL, Auto, and Excess) coverages to be tracked:

☐ **Professional Liability** **Limit:** _____

☐ **Pollution Liability** **Limit:** _____

☐ **Stored Materials** **Value:** _____

☐ **Excess Limit for Unenrolled Sub** **Limit:** _____

Submit Form To:

Program Admin
Alliant Insurance Services, Inc.
Email: Jennifer.Clarke@alliant.com
Phone: 561.214.6378

Please Note: It is the responsibility of the awarding Contractor Party to ensure that their lower-tiered Contractor Party(s) fill out, maintain, and file all necessary OCIP enrollment forms and Insurance documentation with the OCIP Administrator. No Contractor Party or lower-tiered Contractor Party may commence work until they are properly enrolled into the OCIP program, as evidenced by a Certificate of Insurance provided by the OCIP Administrator.

PAYCOR STADIUM PROJECT

NOTICE OF WORK COMPLETION

Contractor Party Name: _____
Address: _____
_____

Awarding Contractor Party: _____
Project Site: _____
Contact for Audit _____
Federal ID Number: _____
First Day on Site _____
Last Day on Site: _____
Final Total Payroll _____
Original Contract Value _____
Change Order Amount _____
Final Contract Value _____
(including Change Orders)

We hereby verify that all Contract work (including the Work of Contractor Parties) has been completed and all corresponding On-Site Payrolls have been submitted. (NOTE: Please ensure you have received this form and submitted to the OCIP Administrator for a final closeout ***for every enrolled Contractor Party*** you have on this project. Please attach a list of your Contractor Parties to this form.)

Signed By: (please print) _____

Signature _____

Date Signed: _____

TO BE SUBMITTED TO THE OCIP PARTIES/AWARDING CONTRACTOR PARTY FOR COMPLETION:

The above referenced Contractor Party has completed their Work at the Project Site under their Contract with our firm on the above date.

Contractor Party: _____

Signature _____

Date Signed: _____

Submit Form To:
Program Admin
Alliant Insurance Services, Inc.
Email: Jennifer.Clarke@alliant.com
Phone: 561.214.6

PAYCOR STADIUM PROJECT

CONTRACTOR PARTY'S INCIDENT REPORT FORM

Incident Location: _____

Injured Party's Name: _____

Injured Party's Address: _____

_____

Injured Party's Home Phone: _____ **Injured Party's Work Phone:** _____

Date of Incident:	
Description of Incident:	

Action Taken: _____

_____

EMS/Police/Fire Called: **YES** ☐ **NO** ☐

Where Injured Party Was Taken:	
Witnesses:	

Additional Remarks: _____

_____

_____

Report Made By: _____ **Company:** _____

Date: _____

PLEASE SUBMIT COMPLETED INCIDENT REPORT TO THE PROJECT SAFETY MANAGER

General and Excess Liability for Enrolled Parties – Offsite Only; All other coverages for all operations

ENROLLED PARTIES SAMPLE CERTIFICATE – ACTUAL REQUIREMENTS & LIMITS MAY VARY BASED ON CONTRACT/SCOPE OF WORK. REFER TO CONTRACT AND MANUAL.

ACORD®

CERTIFICATE OF LIABILITY INSURANCE

DATE (MM/DD/YYYY)

THIS CERTIFICATE IS ISSUED AS A MATTER OF INFORMATION ONLY AND CONFERS NO RIGHTS UPON THE CERTIFICATE HOLDER. THIS CERTIFICATE DOES NOT AFFIRMATIVELY OR NEGATIVELY AMEND, EXTEND OR ALTER THE COVERAGE AFFORDED BY THE POLICIES BELOW. THIS CERTIFICATE OF INSURANCE DOES NOT CONSTITUTE A CONTRACT BETWEEN THE ISSUING INSURER(S), AUTHORIZED REPRESENTATIVE OR PRODUCER, AND THE CERTIFICATE HOLDER.

IMPORTANT: If the certificate holder is an ADDITIONAL INSURED, the policy(ies) must have ADDITIONAL INSURED provisions or be endorsed. If SUBROGATION IS WAIVED, subject to the terms and conditions of the policy, certain policies may require an endorsement. A statement on this certificate does not confer rights to the certificate holder in lieu of such endorsement(s).

PRODUCER	CONTACT NAME:	
Broker/Agent Name & Address	PHONE (A/C, No, Ext):	FAX (A/C,
	E-MAIL ADDRESS:	
	INSURER(S) AFFORDING COVERAGE	NAIC #
	INSURER A : Insurance Company A	
INSURED	INSURER B :Insurance Company B	
Contractor Party Name & Address	INSURER C :Insurance Company C	
	INSURER D :Insurance Company D	
	INSURER E :	
	INSURER F :	

COVERAGES **CERTIFICATE NUMBER:** **REVISION NUMBER:**

THIS IS TO CERTIFY THAT THE POLICIES OF INSURANCE LISTED BELOW HAVE BEEN ISSUED TO THE INSURED NAMED ABOVE FOR THE POLICY PERIOD INDICATED. NOTWITHSTANDING ANY REQUIREMENT, TERM OR CONDITION OF ANY CONTRACT OR OTHER DOCUMENT WITH RESPECT TO WHICH THIS CERTIFICATE MAY BE ISSUED OR MAY PERTAIN, THE INSURANCE AFFORDED BY THE POLICIES DESCRIBED HEREIN IS SUBJECT TO ALL THE TERMS, EXCLUSIONS AND CONDITIONS OF SUCH POLICIES. LIMITS SHOWN MAY HAVE BEEN REDUCED BY PAID CLAIMS.

INSR LTR	TYPE OF INSURANCE	ADDL	SUBR	POLICY NUMBER	POLICY EFF (MM/DD/YYYY)	POLICY EXP (MM/DD/YYYY)	LIMITS	
A	COMMERCIAL GENERAL LIABILITY CLAIMS-MADE X OCCUR GEN'L AGGREGATE LIMIT APPLIES PER: POLICY X PROJECT LOC OTHER:	X	X	Policy Number	Inception Date	Expiration Date	EACH OCCURRENCE	$2,000,000
							DAMAGE TO RENTED PREMISES (Ea. occurrence)	$
							MED EXP (Any one person)	$
							PERSONAL & ADV INJURY	$1,000,000
							GENERAL AGGREGATE	$4,000,000
							PRODUCTS - COMP/OP AGG	$2,000,000
								$
B	AUTOMOBILE LIABILITY X ANY AUTO ALL OWNED AUTOS SCHEDULED AUTOS NON-OWNED HIRED AUTOS	X	X	Policy Number	Inception Date	Expiration Date	COMBINED SINGLE LIMIT	$1,000,000
							BODILY INJURY (Per person)	$
							BODILY INJURY (Per accident)	$
							PROPERTY DAMAGE (Per accident)	$
								$
C	UMBRELLA LIAB X OCCUR CLAIMS- DED RETENTION $	X	X	Policy Number	Inception Date	Expiration Date	EACH OCCURRENCE	$3,000,000
							AGGREGATE	$3,000,000
								$
D	WORKERS COMPENSATION AND EMPLOYERS' LIABILITY Y / N ANY PROPRIETOR/PARTNER/EXECUTIVE OFFICER/MEMBER EXCLUDED? N (Mandatory in NH) If yes, describe under DESCRIPTION OF OPERATIONS below	N / A	X	Policy Number (Ohio Stop Gap)	Inception Date	Expiration Date	X PER STATUTE OTHER	
							E.L. EACH ACCIDENT	$1,000,000
							E.L. DISEASE - EA EMPLOYEE	$1,000,000
							E.L. DISEASE - POLICY LIMIT	$1,000,000
E	Contractors Pollution and/or Professional Liability	X	X				Per Contract	

DESCRIPTION OF OPERATIONS / LOCATIONS / VEHICLES (ACORD 101, Additional Remarks Schedule, may be attached if more space is required)

Project Name: Paycor Stadium Project, 1 Paycor Stadium, Cincinnati, Ohio 45203. Additional Insured (Auto & General liability): Board of County Commissioners, Hamilton County, Ohio, the Cincinnati Bengals , Paul Brown Stadium LTD, LLC, Messer Construction Company, Jostin Construction, Inc., M.B.J. Consultants, KZF Design, Inc. and their Consultants, and Warm Construction, LLC and Owner's Lender(s) are added as Additional Insured with respect to Commercial General Liability including ongoing and completed operations, as well as Commercial Auto Liability, on a primary and non-contributory basis, for work performed or materials provided, or both, by the Insured with respect to the aforementioned project. Umbrella/Excess follows form to General Liability, Auto Liability, and Employers Liability. Waivers of Subrogation must apply to all parties listed above, for all policies. None of the above policies contain residential exclusions or height restrictions.

(Attach copies of Schedule of Endorsements, Additional Insured Endorsements, Waiver of Subrogation's, and any other endorsements as required.)

CERTIFICATE HOLDER	CANCELLATION
Board of County Commissioners, Hamilton County, Ohio c/o Alliant Insurance Services, Inc. Jennifer.Clarke@alliant.com	SHOULD ANY OF THE ABOVE-DESCRIBED POLICIES BE CANCELLED BEFORE THE EXPIRATION DATE THEREOF, NOTICE WILL BE DELIVERED IN ACCORDANCE WITH THE POLICY PROVISIONS. AUTHORIZED REPRESENTATIVE *AGENT / BROKER SIGNATURE*

© 1988-2015 ACORD CORPORATION. All rights reserved.

ACORD 25 (2016/03) The ACORD name and logo are registered marks of ACORD

DRAFT

All coverage for all operations – on-site and off-site

UNENROLLED PARTIES SAMPLE CERTIFICATE – ACTUAL REQUIREMENTS & LIMITS MAY VARY BASED ON CONTRACT/SCOPE OF WORK. REFER TO CONTRACT AND MANUAL.

ACORD®

CERTIFICATE OF LIABILITY INSURANCE

DATE (MM/DD/YYYY)

THIS CERTIFICATE IS ISSUED AS A MATTER OF INFORMATION ONLY AND CONFERS NO RIGHTS UPON THE CERTIFICATE HOLDER. THIS CERTIFICATE DOES NOT AFFIRMATIVELY OR NEGATIVELY AMEND, EXTEND OR ALTER THE COVERAGE AFFORDED BY THE POLICIES BELOW. THIS CERTIFICATE OF INSURANCE DOES NOT CONSTITUTE A CONTRACT BETWEEN THE ISSUING INSURER(S), AUTHORIZED REPRESENTATIVE OR PRODUCER, AND THE CERTIFICATE HOLDER.

IMPORTANT: If the certificate holder is an ADDITIONAL INSURED, the policy(ies) must have ADDITIONAL INSURED provisions or be endorsed. If SUBROGATION IS WAIVED, subject to the terms and conditions of the policy, certain policies may require an endorsement. A statement on this certificate does not confer rights to the certificate holder in lieu of such endorsement(s).

PRODUCER	CONTACT NAME:	
Broker/Agent Name & Address	PHONE (A/C, No, Ext):	FAX (A/C,
	E-MAIL ADDRESS:	
	INSURER(S) AFFORDING COVERAGE	NAIC #
	INSURER A : Insurance Company A	
INSURED	INSURER B :Insurance Company B	
Contractor Party Name & Address	INSURER C :Insurance Company C	
	INSURER D :Insurance Company D	
	INSURER E :	
	INSURER F :	

COVERAGES **CERTIFICATE NUMBER:** **REVISION NUMBER:**

THIS IS TO CERTIFY THAT THE POLICIES OF INSURANCE LISTED BELOW HAVE BEEN ISSUED TO THE INSURED NAMED ABOVE FOR THE POLICY PERIOD INDICATED. NOTWITHSTANDING ANY REQUIREMENT, TERM OR CONDITION OF ANY CONTRACT OR OTHER DOCUMENT WITH RESPECT TO WHICH THIS CERTIFICATE MAY BE ISSUED OR MAY PERTAIN, THE INSURANCE AFFORDED BY THE POLICIES DESCRIBED HEREIN IS SUBJECT TO ALL THE TERMS, EXCLUSIONS AND CONDITIONS OF SUCH POLICIES. LIMITS SHOWN MAY HAVE BEEN REDUCED BY PAID CLAIMS.

INSR LTR	TYPE OF INSURANCE	ADDL	SUBR	POLICY NUMBER	POLICY EFF (MM/DD/YYYY)	POLICY EXP (MM/DD/YYYY)	LIMITS	
A	COMMERCIAL GENERAL LIABILITY CLAIMS-MADE X OCCUR GEN'L AGGREGATE LIMIT APPLIES PER: POLICY X PROJECT LOC OTHER:	X	X	Policy Number	Inception Date	Expiration Date	EACH OCCURRENCE	$2,000,000
							DAMAGE TO RENTED PREMISES (Ea. occurrence)	$
							MED EXP (Any one person)	$
							PERSONAL & ADV INJURY	$1,000,000
							GENERAL AGGREGATE	$4,000,000
							PRODUCTS - COMP/OP AGG	$2,000,000
								$
B	AUTOMOBILE LIABILITY X ANY AUTO ALL OWNED AUTOS SCHEDULED AUTOS NON-OWNED HIRED AUTOS	X	X	Policy Number	Inception Date	Expiration Date	COMBINED SINGLE LIMIT	$1,000,000
							BODILY INJURY (Per person)	$
							BODILY INJURY (Per accident)	$
							PROPERTY DAMAGE (Per accident)	$
								$
C	UMBRELLA LIAB X OCCUR CLAIMS- DED RETENTION $	X	X	Policy Number	Inception Date	Expiration Date	EACH OCCURRENCE	$
							AGGREGATE	$
								$
D	WORKERS COMPENSATION AND EMPLOYERS' LIABILITY Y / N ANY PROPRIETOR/PARTNER/EXECUTIVE OFFICER/MEMBER EXCLUDED? N (Mandatory in NH) If yes, describe under DESCRIPTION OF OPERATIONS below	N / A	X	Policy Number (Ohio Stop Gap)	Inception Date	Expiration Date	X PER STATUTE OTHER	
							E.L. EACH ACCIDENT	$1,000,000
							E.L. DISEASE - EA EMPLOYEE	$1,000,000
							E.L. DISEASE - POLICY LIMIT	$1,000,000
E	Contractors Pollution and/or Professional Liability	X	X				Per Contract	

DESCRIPTION OF OPERATIONS / LOCATIONS / VEHICLES (ACORD 101, Additional Remarks Schedule, may be attached if more space is required)

Project Name: Paycor Stadium Project, 1 Paycor Stadium, Cincinnati, Ohio 45203. Additional Insured (Auto & General liability):Board of County Commissioners, Hamilton County, Ohio, The Cincinnati Bengals, Paul Brown Stadium LTD, LLC, Messer Construction Company, Jostin Construction, Inc., M.B.J. Consultants, KZF Design, Inc. and their Consultants, Warm Construction, LLC and Owner's Lender(s) are added as Additional Insured with respect to Commercial General Liability including ongoing and completed operations, as well as Commercial Auto Liability, on a primary and non-contributory basis, for work performed or materials provided, or both, by the Insured with respect to the aforementioned project. Umbrella/Excess follows form to General Liability, Auto Liability, and Employers Liability. Waivers of Subrogation must apply to all parties listed above, for all policies. None of the above policies contain residential exclusions or height restrictions.

(Attach copies of Schedule of Endorsements, Additional Insured Endorsements, Waiver of Subrogation's, and any other endorsements as required.)

CERTIFICATE HOLDER	CANCELLATION
Board of County Commissioners, Hamilton County, Ohio c/o Alliant Insurance Services, Inc. Jennifer.Clarke@alliant.com	SHOULD ANY OF THE ABOVE-DESCRIBED POLICIES BE CANCELLED BEFORE THE EXPIRATION DATE THEREOF, NOTICE WILL BE DELIVERED IN ACCORDANCE WITH THE POLICY PROVISIONS. AUTHORIZED REPRESENTATIVE *AGENT / BROKER SIGNATURE*

© 1988-2015 ACORD CORPORATION. All rights reserved.

ACORD 25 (2016/03) **The ACORD name and logo are registered marks of ACORD**

DRAFT

Alliant

Paycor Stadium
2026 South Scoreboard Facade
BP#5

KZF #8445.10
October 13, 2026

SECTION 00 73 19 - HEALTH & SAFETY REQUIREMENTS

PART 1 - GENERAL

1.1 The following provides a summary of Contractor's Safety Program requirements regarding worker safety and/or project safety.

1.2 This summary should in no way be construed as being all-inclusive. It is issued as a guide to aid each Subcontractor in their understanding of the safety expectations on this project.

1.3 Subcontractors must abide by the Messer Safety, Health and Environmental Requirements, latest revision.

PART 2 - SITE SPECIFIC SAFETY PLAN AND PRECONSTRUCTION SAFETY MEETING

2.1 A project specific safety plan will be developed by the Contractor and provided to Subcontractors that will reference, more directly, site safety requirements and provide the Emergency Action Plan, Site Requirements and General Requirements.

2.2 All Subcontractors will be required to provide, to Contractor, a site specific safety plan for review and approval before any work is to begin on site. This plan must be completed using the provided template and describe the means and methods that the Subcontractor will be using to safely perform all work on site, and comply with all federal, state and local safety requirements. This site specific plan will be provide to the Contractor for review and approval before any work activities are to begin onsite.

2.3 As part of this plan, Subcontractors will provide all SDS sheets (safety data sheets) for any and all chemicals that will be used on site, to be stored at the project operations office in a predetermined place, to ensure access for all.

2.4 Prior to beginning work onsite, the site-specific safety plan and associated documentation must be reviewed and discussed with Messer project management and safety personnel in a scheduled Preconstruction Safety Meeting. Site specific safety requirements and processes will also be reviewed in this meeting. Subcontractor attendees must include, at a minimum: Project Manager, site-based leader (Foreman and/or Superintendent) and Safety Representative.

PART 3 - NEW WORKER SAFETY ORIENTATION

3.1 All workers (craft, management, etc.) are required to attend a jobsite safety orientation prior to the start of work. This orientation will address safety, risk analysis, and infection control requirements on this project. It is anticipated that this orientation will take approximately one hour to complete.

PART 4 - SPECIFIC SAFETY REQUIREMENTS

4.1 Hard hats are required to be worn at all times.

4.2 Every Subcontractor, including lower tier subcontractors, shall provide, and require its employees to utilize, eye protection at all times on this project. This requirement applies to all employees at all times while on site except during scheduled breaks away from potential eye hazards or while in a trailer performing office functions.

4.3 Gloves are required for anyone entering or working on the jobsite. Every Subcontractor, including lower tier subcontractors, is required to provide appropriate hand protection for their employees with glove selection based on task hazards presented for work performed.

4.4 High-visibility vests or clothing is required at all times. In addition, any persons directing traffic along roadways are to have reflective signage to direct traffic in addition to the other PPE requirements.

4.5 100% fall protection at or above 6' for all personnel is required.

4.6 Guardrails are required on the perimeter all rooftops until final finish components need to be install at the perimeter.

4.7 Any barricade or safety device removed by a Subcontractor's employee(s) in order to perform the work shall be immediately re-erected as soon as that work activity is complete. Temporary barricades and controlled access zones must be established while the barricade is down. If the Subcontractor does not perform this in a timely manner, Contractor or designee will perform and back charge the Subcontractor.

4.8 Use of platform style step ladders are required on this project. Regular step ladders will not be permitted.

4.9 100% tie-off is required while using all forms of lifts, including scissors lifts.

4.10 All Subcontractors performing any hot work (grinding, welding, burning, etc.) are required to provide a fire watch person. Fire blankets are also required where necessary.

4.11 All Subcontractors preforming any overhead work will have approved plan to protect entire site from overhead hazards or falling objects before work is to begin.

4.12 Weekly Safety Meetings with all employees of this Subcontractor, documented by attendance sheets, typed safety topics (Tool Box Talks), a copy of the agenda, and minutes. This documentation is to be filed with Contractor on a weekly basis.

4.13 Weekly Safety Walk-Through of the jobsite by each Subcontractor's Superintendent and Contractor's onsite personnel documented by a listing of deficient items found, methods of correction, and date of correction. This documentation is to be filed with Contractor on a weekly basis.

4.14 Subcontractors will be required to complete a job safety analysis (JSA) for each work activity that they will perform. This documentation is to be filed with Contractor on a daily basis. Each Subcontractor employee shall attend the site wide morning huddle every morning at the location determined by the project team. After the site wide huddle, each Subcontractor shall conduct a huddle meeting prior to every work shift to discuss the activities of the shift, review JSA(s) and to establish a safe plan of action to accomplish the work. This meeting shall be conducted with all employees working on site by the on-site leader for each Subcontractor. Any changes to the established plan shall be communicated throughout the shift to affected employees.

4.15 Subcontractors will be required to address any site safety issues noted through FieldView or the current Messer safety tracking application within 24 hours after the issue has been noted.

PART 5 - MESSER SAFETY 4-SITE PROGRAM

5.1 The Messer Safety4Site Program (the "Program") has been established by Messer with the objective of reducing unsafe conditions which could cause accidents on Messer projects. It is applicable to all Messer employees; and subcontractors, sub tier contractors and material suppliers of all tiers (all of the foregoing being referred to in this document as "Subcontractors") in addition to the obligation of all Subcontractors, under the Subcontract Documents, to comply with all applicable federal, state, and local occupational safety and health laws including, but not limited to, standards, regulations, and requirements under the Occupational Safety and Health Act

("OSHA"). The Program does not create a Messer duty or assurance of safety to any Subcontractor or Subcontractor's employee (see Additional Terms, below).

Each Subcontractor and Messer employee shall be subject to specific remedies set forth below in case of violation of the OSHA Focus 4 Hazards (falls, electrical, struck by, caught in/between) by its employees. Messer reserves the right to escalate directly to higher level consequences for egregious fall protection violations. Egregious violations are defined as an exceptionally severe circumstance where there is an immediate and substantial risk of a person falling from an elevated position, leading to grave injury or loss of life. These include, but are not limited to, the examples outlined in the Non-Negotiable Behavior chart.

For covered violations (either actions or omissions) related to the OSHA Focus 4 Hazards, the following shall apply:

A. First Violation by an Employee or Subcontractor
   1. Upon investigation and notification by Messer of the violation, Subcontractor shall remove the employee or Messer shall remove its employee from the site for the remainder of that working day (and for the next working day also if removal occurs in the second half of the employee's shift). If the employee is a supervisor or if Subcontractor's supervisor is not readily available, Messer may direct the employee to leave the site and the incident shall be reported to Subcontractor's management.
   2. Immediately following S4S event, Messer Safety Manager and Project Manager or other designated person shall meet with employee and supervisor to review S4S incident and define immediate corrective actions
      For fall protection violations - determination will be made at this time if the violation is egregious. Messer Safety Department leadership will be involved in the determination. Egregious fall protection violations will result in the following:
      a. **Subcontractor employee:** escalation to Second Violation level consequences as outlined in the following section of this program, including removal from Messer projects for a period of one year.
         Messer employee: suspension, without pay, for a minimum of 5 days and completion of fall protection retraining prior to returning onsite.
   3. The Senior Project Executive (SPE) or other designated Messer manager will notify Subcontractor executive management of the S4S violation. Notification will request that Subcontractor contact SPE to define how future S4S violations will be prevented.
   4. Upon return, the Subcontractor (or Messer if a Messer employee is involved) shall give the employee a one-page handout on the Focus 4 Hazards. Employee must read, sign and date. Subcontractor or Messer must discuss the violation and corrective actions taken at the next huddle meeting.
   5. S4S Incident will be reviewed at the following days Site Wide Morning Huddles and/or Plan of the Day (POD) meeting (or other) to reinforce actions and requirements.

B. Second Violation by the same Employee
   This section applies in case of violation by an employee (of a subcontractor or Messer) of the same Focus 4 Hazard within one year, or a different Focus 4 hazard within a three month timeframe, or any egregious fall protection violation by a subcontractor; otherwise a subsequent violation by the same employee is treated as a First Violation by that individual.
   1. Initial actions will Follow Steps 1-3 above

2. A subcontractor employee will not be permitted to work on any Messer project for a period of one year. Prior to return to work on Messer projects, the employee must complete the 10-hour OSHA training program and Subcontractor must provide an action plan to Messer project management for approval prior to employee return.
3. A Messer employee will be terminated and will not be eligible for re-hire for 30 days and the employee must complete a 30-hour OSHA training program, retraining on the subject matter relative to the violation(s) as determined by the Safety and Craftforce Development, whether previously taken or not.
4. Subcontractor or Messer must discuss the violation and actions taken at the next Site Wide Morning Huddle meeting and/or Plan of the Day (POD) meeting.
5. Messer Safety Department will ensure that tracking of these individuals is documented and available to project sites.

C. Second and/or Multiple Violations by a Subcontractor

This section applies in cases of a second violation by a Subcontractor's employees on a specific project or multiple violations on a project (whether the same or different employees are involved in the two incidents). or if a Subcontractor incurs a total of three or more covered violations on any other Messer projects collectively, during any 12-month period. This section also applies to first violations of any fall protection category violation if it is determined to be egregious.

1. Upon second violation at the specific project site or multiple violations at any Messer site over a 12-month period, Messer will require the following actions be taken before any work will continue:
   a. Subcontractor Executive Management will meet with Messer to determine future remedial actions to be taken to prevent further violation.
   b. Subcontractor shall provide a written corrective/remediation action plan. This plan must be approved by Messer Safety Department and any necessary resources, or requirements needed must be put in place prior to resumption of work activities.
2. Upon second (or multiple) violation, Messer Safety Department will determine requirement for a full-time and qualified safety representative to the project to supervise the communication and the work activities of the Subcontractor. The safety representative must be approved by Messer Safety department and provided at no additional cost to the Owner or to Messer. If required, this safety person must be on site whenever the Subcontractor is performing work on the project, until such time that Subcontractor has demonstrated to Messer's satisfaction that a significant improvement with the Subcontractor's safety performance has occurred.
3. If the Subcontractor has a direct contract with Messer, Messer may terminate those contracts for cause without further notice or opportunity to cure, and thereafter pursue all other available remedies for such default. If the Subcontractor does not have a direct contract with Messer, Messer may direct the Subcontractor under which the violating Subcontractor is working to remove the violating Subcontractor permanently from the project; in that event, the higher-tier Subcontractor has the responsibility of fulfilling the violating Subcontractor's work by other means at no additional cost to the Owner or Messer. If Messer elects not to terminate, Messer may impose other reasonable sanctions including additional safety assurance requirements.

D. Additional Terms

1. This Program is subject to change by Messer from time to time with notice to Subcontractor; however, Subcontractor is not required to accept material increases in its obligations or liability under the Program without its consent.

2. It is the intention of the Program to cover violations related to Focus 4 Hazards which are of a significant nature. Messer's good faith determination as to whether it is a covered violation or not shall be final. Every identified violation will be reviewed by the supervisor of the site manager to ensure consistency of interpretation of a violation of the Focus Four Non-negotiables.
3. In Messer's discretion, a group of related individual violations may be treated as a single violation at the Subcontractor level. For example, if several Subcontractor employees engaged in related work are failing to use required fall protection, each such employee will be charged with an individual violation when the situation is discovered by Messer but if Subcontractor has no previous violations on this project, Messer may treat the incident as a single violation for Subcontractor and not impose Second Violation or Multiple Violation sanctions on Subcontractor.
4. For purposes of Multiple Sanctions, "Messer projects" include all projects in which Subcontractor is a subcontractor or material supplier of any tier under Messer, and all projects in which Messer provides construction management services covering Subcontractor pursuant to an agreement with the Owner.
5. It is not Messer's intention to interfere in Subcontractor's relationship with its employees. When feasible, significant actions under the Program such as excluding an employee from the project site will be notified by Messer to a supervisory employee of the Subcontractor for the Subcontractor to put into effect immediately, but Messer reserves the right to take immediate action to rectify unsafe situations, and to direct a Subcontractor employee to leave the site if Subcontractor management personnel are not on site. If Subcontractor is directed to remove an employee from the site, the disposition of the employee after leaving the site and any resulting compensation issues for the employee are solely between the Subcontractor and the employee, and the Program does not require that the Subcontractor withhold pay from the employee for the time that the employee is barred from the site, but there shall be no additional cost to the Owner or Messer for the Work as a result of exclusion of an employee or any other action taken pursuant to the Program.
6. Messer and the Owner do not assume any responsibility whatsoever to Subcontractor, to its employees, or to third parties, for supervising or monitoring the safety precautions or compliance of the Subcontractor and its employees; Subcontractor remains solely responsible for these matters and shall defend and fully indemnify the Owner and Messer, as provided in the Subcontract Documents, against any claims or damages resulting from safety violations or other negligence of Subcontractor employees. Messer assumes no duty to anyone to detect and require correction of violations. Messer may, but is not required to, make periodic inspections of the project site. By establishing the Program and conducting other safety-related activities on the project, Messer is not undertaking any duty to Subcontractor, to Subcontractor's employees, or to third parties concerning safety on the project and any such duty is expressly disclaimed.
7. Sanctions provided under the Program for individuals and the Subcontractor are not exclusive and Messer reserves all other remedies provided under the Subcontract Documents or by law.
8. The Owner and Messer shall have no liability whatsoever to any Subcontractor or Subcontractor's employee or any third party for actions taken by Messer pursuant to the Program in good faith, even if it is later determined that such action was factually or legally unjustified.
9. A Subcontractor is not charged with a violation under the Program for any violation committed by an employee of a Lower tier subcontractor or material supplier to that Subcontractor, as long as the Subcontractor's supervisory personnel had communicated the program requirements and did not direct the activities leading to the violation being

observed by Messer. Each Subcontractor must take all necessary actions to make the Program binding on its lower tiers and to cooperate with Messer in implementing any applicable sanctions against its lower tiers. Lower tier subcontractors shall be entities with written agreements that include similar terms and conditions as those of Subcontractors with direct contracts with Messer. In the absence of such written agreements, Lower tier subcontractor employees and representatives shall be treated as employees of the Subcontractor.

Safety4Site
Non-Negotiable Behavior

Rev. March 1, 2024

Falls	Struck-By	Caught-In-Between	Electrical / Utility
Working 6 feet or greater with no fall protection (100% fall protection at 6 feet or greater).	Disregard or crossing of designated controlled access zones without prior authorization from the controlling/installing contractor.	Entering an unprotected trench or excavation 5 ft deep or greater, without proper cave-in protection – shoring, sloping/benching, trench box	Operating equipment or working within 10 feet from overhead power lines. (Equipment, ladders, scaffolding, tools, etc.) Note: In transit with no load and boom lowered, the equipment clearance shall be a minimum of 4 feet for voltages less than 50kV.
Exposed holes large enough for a human to pass through, and is 6 feet or greater in depth, left unprotected or improperly protected.	Exposing workers to overhead struck-by hazards - Failure to properly plan and execute overhead work that potentially exposes person(s) below (e.g. masonry work, roofing, welding, demolition, steel erection, formwork, deck penetrations, etc.). Dropping debris off building without proper chutes or alternate procedures approved by Messer.	Entry into a confined space without proper training, permits, equipment or safety processes in place	Exposing oneself or others to live bare electrical conductors (i.e. open electrical panels, junction boxes, missing knock outs, etc.) greater than 50 volts.
Blatant, clear and/or intentional misuse of fall protection equipment or fall protection systems including: Altering removing or disabling any component of a fall protection system. May include but not limited to: taking down a guardrail or warning line and not replacing it; altering someone's PFAS without permission.	Riding on equipment not designed for multiple passengers or open back pickup trucks (catching a ride).	Failure by operator to barricade/protect potential crush or pinch point hazards between equipment being operated and adjacent structures or other equipment. Failure by operator to barricade/protect the swing radius of stationary equipment (e.g. cranes). Exposing oneself to a caught-between hazard by disregarding barricading/protection without prior authorization from the controlling/installing contractor.	Working on live electric without the proper planning/approval, PPE and procedures. All live work must be discussed with Messer prior to the work being performed.
Failure to tie off in any Mobile Elevated Work Platform (MEWP) (boom lift, Scissor lift, etc)	Using damaged equipment that may inadvertently fire (i.e. nail guns, etc.). Altering the equipment where the safety is by-passed. This may include but not limited to: disabling a guard on a chop saw; removing the guard on a hand grinder; disabling the safety muzzle of a pneumatic nailer or powder actuated tool; etc.	Operator exposing employee(s) to an overhead load while working in an excavation. This may include but not limited to: loaded excavator bucket; empty excavator bucket; load that is strapped to an excavator bucket; etc.	The unauthorized altering, by-passing or removing any guards, locks, tags, or any other safety device protecting persons from live electric.
Improper use of ladders. (e.g) 1. Standing on very top cap. 2. Straddling or sitting on top of ladder.	Rigging without proper training or blatant, clear and/or intentional misuse of rigging equipment.	Reckless operation of equipment (i.e. horseplay, operation within 2' of a trench, exceeding the limitations of the machine, bypassing any safety devices, etc.). Operating in tight confines with out a spotters or operating without proper training	Failure by competent person or operator to survey for utilities, before digging, core drilling, cutting or demolition Failure by competent person or operator to follow established protocols for re-marking, hand digging, pot-holing, etc. within established tolerance zones
Egregious fall protection violations will result in higher level accountability as outlined in the program language. These are defined as an exceptionally severe circumstance where there is an immediate and substantial risk of a person falling from an elevated position, leading to grave injury or loss of life. Examples include, but are not limited to: - Working within reach of an open edge with no fall protection - Standing on the top rails of a MEWP without any PFAS - Standing on the top rail of a platform ladder - Working on a wall, column or other vertical surface without any fall protection			

PART 6 – SUBCONTRACTOR FOREMAN ROLES AND RESPONSIBILITIES

A. The above items are required for each project and the expectation is that each Subcontractor Foreman carry out these commitments and fulfill each requirement to the fullest extent. In summary, each Foreman is responsible for the following:
   1. Completion and/or Execution of their Site Specific Safety Plan
      a. The Site Specific Safety Plan shall be reviewed periodically as the project changes to ensure new hazards are being identified and a plan put in place to prevent.
      b. Updates to the Site Specific Safety Plan shall be provided to Messer in a timely manner.
   2. Completion, submission, and review of their JSA's on a daily basis.
   3. Completion, submission, and implementation of a 5S Plan that follows the guidelines of Messer's 5S program. Each topic is to be addressed in this plan and that plan shall be executed by the Foreman and their crew.
      a. Sort: Just-in-time deliveries
      b. Straighten: Organized material and equipment storage
      c. Shine: Continuous Daily Clean-Up
      d. Standardize: Color Coded Delivery
      e. Sustain: Composite Clean-Up Crews (Messer has the right to invite Foreman to participate in the composite clean-up crew)
   4. Hold their crew accountable for wearing proper PPE and provide their crew with proper PPE.
   5. Complete Messer permits and turn them in prior to starting work.
   6. Identify competent people for each hazard and hold them accountable to their role.
   7. Identify certified riggers/signal person(s) and hold them accountable to their role.
   8. Identify hazards and formulate a plan to eliminate or avoid those hazards.

PART 7 – DROPPED OBJECT PREVENTION AND OVERHEAD PROTECTION

A. Overhead risks and controls shall be identified for key scopes of work and addressed in the Subcontractor Site-Specific Safety Plan. Daily JSA's shall be used to identify area-specific risks and controls for each day's work activities. Controls identified on the daily JSA must be in accordance with minimum controls identified within the following requirements, Messer's risk assessment and site-specific safety plan and the subcontractor's approved site-specific safety plan.

   1. Primary control measures shall be the preferred method of protection. Secondary control measures must be utilized where the primary control measures for dropped object prevention are not feasible or will not provide complete protection. Most overhead work activities will require a combination of primary and secondary controls.

      a. Primary Control (Dropped Object Prevention) measures are focused on preventing an object from falling. These measures may include; tool lanyards/tethers, rated tool bags with closure, guardrails with netting, sloped roof protection, material storage and securement/tethering.

      b. Secondary Control (Dropped Object Protection/Overhead Protection) measures are focused on preventing a dropped object from causing injury to persons or damage to property, but do not prevent an object from falling. These measures may include; protective canopies, horizontal debris nets, and controlled access zones.

B. Mesh or netting is required on all perimeter guardrails installed at heights above 10' as well as on rail systems around elevator shafts, mechanical chases, stairwells or similar openings inside buildings where employees will perform work.

C. Sloped roofs shall have slide guards, debris netting or other means of primary dropped object prevention in place at all times when employees, tools or materials are present on the roof. If not feasible for the activity, an alternate plan for protection must be submitted and approved.

D. All buildings with exterior elevated work ongoing shall have designated, protected access/egress points from the building. This may be accomplished by walk through scaffolding, connex boxes, canopy structures or other equivalent means. Additionally, measures must be put in place to restrict use of non-designated access/egress points. Emergency egress needs must be taken into consideration when planning.

E. Controlled access zones (CAZ) shall be established for all overhead work activities where there is potential for unauthorized individuals to enter the area below. Barricades should be sized such that a dropped object will not deflect and bounce beyond the barricade. If barricades cannot be sized to fully contain deflected objects, primary protection measures must be used in addition to controlled access zones. Additionally, primary protection measures must be used when authorized ground personnel are potentially exposed to overhead hazards in the barricaded area.

1. Danger or caution tape (including reinforced tapes) shall not be used for overhead protection CAZs. Only hard barricade material may be used (e.g., snow fence, cones and bones, jersey barriers). Flagged rope or chain may be utilized for short-term barricades.

2. Barricades must have signage or tags indicating the risk and ownership of the barricade.

F. Material storage and waste/debris containment and disposal shall be managed per Messer's 5S program to limit potential falling or windborne objects. No materials shall be stacked/stored higher than guardrail protection if stored adjacent to perimeter or shaft guardrails. Sheet goods (including plywood, metal decking, insulation board, etc.) and other loose materials stored on open decks or roofs shall be positively secured when not actively being used and at the end of each shift. Acceptable securement may include straps, banding, pallet wrap, etc.

G. Failure to implement these procedures or use required drop prevention systems/overhead protection will be considered a violation of Messer's Safety4Site program and will result in removal from the project site.

PART 8 – FALL PROTECTION PLANNING

A. Guardrail systems shall be the preferred choice of protection for all elevated work activities. If the contractor/supplier can prove that guardrails are infeasible or create a greater hazard, as defined in Subpart M of the OSHA Construction Standards, it may, where permitted by a Messer Safety Leadership, implement the following alternative systems in response to the fall hazards:

1. Personal fall arrest systems;
2. Warning lines;
   a. Required to be a minimum of 15 feet back from leading edges for all trades, excluding roofers.
3. Controlled access zones;

4. Safety net systems
5. Safety monitoring systems will not be permitted.

B. These alternative systems may be utilized, with approval, in controlled work environments provided the following is established:

1. Explanation in writing is submitted to the Messer Safety Department as to why the use of guardrail systems is infeasible or creates a greater hazard/harm to the individuals involved.
2. Development of a written fall protection plan, utilizing the Messer Fall Protection Plan template, which outlines all elements involved with the usage of personal fall arrest systems, warning lines, controlled access zones, and
3. Orientation process, which communicates this information to the individuals involved with the work activity, prior to beginning work.

C. The purpose of this extensive pre-planning is to ensure that the most effective and appropriate fall protection systems are used whenever possible. It is also designed to ensure that those individuals involved with the usage of personal fall arrest systems, warning lines and controlled access zones truly understand the detail and organization required. Finally, the pre-planning will also highlight who is permitted (due in part to thorough training and communication) to work with these systems.

END OF SECTION 00 73 19

Safety Requirements

Messer
WeAreBuilding.

Updated February 15, 2024

zero injury

Table of Contents

1.0 Introduction, Purpose and Scope 3
- 1.1 CEO Statement 3
- 1.2 Purpose 4
- 1.3 Scope 4

2.0 General Requirements 5
- 2.1 Safety and Health Program 5
- 2.2 Reporting 5
- 2.3 Potential Hazards and Emergencies 5
- 2.4 Employee Qualifications and Conduct 6
- 2.5 Safety Processes 7
- 2.6 Housekeeping and Sanitation 8
- 2.7 Full Time Safety Manager Requirements 10

3.0 Safety Requirements 12
- 3.1 Personal Protective Equipment (PPE) 12
- 3.2 Elevated Work and Fall Protection 13
- 3.3 Scaffolding and Mobile Elevating Work Platforms 15
- 3.4 Ladders 16
- 3.5 Electrical Safety 16
- 3.6 Lockout, Isolation, and Tag out of Equipment 17
- 3.7 Tools 18
- 3.8 Confined Space Entry 19
- 3.9 Excavation and Trenching 20
- 3.10 Mobile/Heavy Equipment 22
- 3.11 Cranes and Rigging 23
- 3.12 Welding and Cutting 25
- 3.13 Lasers 25
- 3.14 Fire Protection and Prevention 25
- 3.15 Demolition 27
- 3.16 Use of Vehicles 27
- 3.17 Construction Signage Use 28
- 3.18 Concrete and Masonry 28
- 3.19 Dropped Object Prevention and Overhead Protection 29

4.0 Health Requirements 31
- 4.1 Hazardous/Toxic Substances 31
- 4.2 Respiratory Protection 32
- 4.3 Medical Surveillance 32
- 4.4 Hearing Conservation and Noise Control 32
- 4.5 Asbestos Containing Materials 32
- 4.6 Lead Containing Materials 33
- 4.7 Silica 33
- 4.8 Industrial Hygiene and Exposure Standards 33
- 4.9 Moisture Intrusion and Mold 34
- 4.10 Hexavalent Chromium 34

5.0 Environmental Requirements 35
- 5.1 Protection of the Environment 35
- 5.2 Air Pollution 35
- 5.3 Water Pollution 35

1.0 Introduction, Purpose and Scope

1.1 CEO Statement

1.1.1 Messer's safety goal is zero injuries on our projects. Our core safety values are:

1.1.1.1 We believe no job, task or schedule is more important than the health and safety of people on or near our jobsites

1.1.1.2 We are responsible for and take action to ensure our own safety and the safety of those around us

1.1.1.3 We will return every person home to their families safely each day

1.1.2 When our decisions and actions are guided by these core values, accidents will be nonexistent.

1.1.3 We are a company of builders who respect not only each other but our business partners. We have a strong passion to keep everyone safe and are committed to building a zero injury culture.

1.1.4 Creating and maintaining a culture of zero injuries takes every person working together to positively influence safety and health decisions, processes and policies. The continued growth of that safety culture will be greatly influenced by example. So, it is expected that Messer leaders, senior managers and our business partner's leadership model the safety behavior expected. However, it is imperative that all employees and workers on our sites make solid safety decisions, as well as hold all levels of management accountable for making safety a component of their leadership and supervision.

1.1.5 All contractor, temporary and/or full-time employees have the authority to suspend a work task or group orientation when the control of safety or environmental risk is not clearly established or understood.

1.1.6 Stop Work Authority is in place to ensure the right thing is done the right way.

1.1.7 This program manages risk and protects personnel, the environment and various assets. Any intervention will be supported by the Company Management and there will be no repercussions for using the Stop Work Authority.

1.1.8 This commitment will keep our construction sites and all of our work environments accident free.

1.2 Purpose

1.2.1 The purpose of this Safety Requirements is to define minimum safety requirements for all Messer projects, Employees, Subcontractors, and other companies engaged in services on a Messer project. The requirements identify key points of Messer's Safety, Health and Environmental Management Plan to be undertaken during all construction activities.

1.2.2 These requirements are built upon Messer's philosophy that every incident is preventable. This forms the basis for our safety processes, procedures, and requirements that will be implemented on all Messer projects. The aim of this program is to provide personnel with the required information and knowledge to do the right things, the right way, every time to achieve our goal of Zero Injuries on our projects.

1.3 Scope

1.3.1 This plan applies to all personnel associated with any Messer project and any other location or task associated with a Messer project, including corporate headquarters, regional offices and the Rental Division.

1.3.2 All Messer employees, sub-contractors and visitors shall comply with the requirements specified in this document as part of the contract conditions during execution of the service. Exceptions are only allowed upon approval by Messer via formal requests. If any conflicts are found the more stringent requirement shall apply. This document sets out the requirements to verify that safe work practices are established, appropriately supervised, with proper training and management so as to help prevent incidents such as personal injury, injury to others, environmental damage/impacts, or property damage.

2.0 General Requirements

2.1 Safety and Health Program

2.1.1 Each contractor (and supplier when applicable) shall submit a copy of its site-specific safety program to Messer before its work begins. This plan must include the criteria and topics outlined in the Messer Subcontractor Site-Specific Safety Plan template. The contractor/supplier shall ensure that their plan meets or exceeds the safety requirements for the project.

2.1.2 The contractor/supplier is required to submit its fall protection plan (if applicable), any applicable training certification such as crane operator training, and any other site-specific paperwork associated with the project, before work begins.

2.1.3 Prior to beginning work onsite, the site-specific safety plan and associated documentation must be reviewed and discussed with Messer project management and/or safety personnel in a Preconstruction Safety Meeting.

2.1.4 Each contractor/supplier shall maintain an effective Company safety and health program, which will provide systematic policies, procedures and practices that are adequate to identify and protect their employees from occupational safety and health hazards. The contractor/supplier safety and health program shall, at a minimum, include:

2.1.4.1 Management commitment and employee involvement;

2.1.4.2 Documented work site analysis and hazard assessment;

2.1.4.3 Hazard prevention and control procedures; and

2.1.4.4 Safety and health training.

2.2 Reporting

2.2.1 The contractor/supplier shall notify the Messer representative immediately in the event of an injury, first aid case, near miss, property damage, or environmental incident, such as a spill or release of hazardous material.

2.2.2 The contractor/supplier shall submit a completed Messer accident/incident report to the Messer representative within 24 hours of the occurrence of the injury, incident, etc.

2.2.2.1 The report shall include, as a minimum, the nature and extent of the injury, first aid case, near miss or incident, causes of the injury etc., and corrective actions needed to prevent a recurrence.

2.2.2.2 Any follow-up information on personal injuries (doctor's reports, insurance or worker's compensation reports etc.) shall be forwarded to the Messer representative as soon as it becomes available.

2.2.3 As required by federal, state, or local laws or ordinances, the contractor/supplier shall report certain injuries, illnesses, or environmental incidents to the appropriate agencies.

2.2.4 The contractor/supplier shall be knowledgeable of these reporting requirements, and shall inform and copy Messer when any such report is necessary or is made.

2.3 Potential Hazards and Emergencies

2.3.1 The contractor/supplier shall inform its employees of potential hazards, take appropriate steps to reduce exposure to potential hazards, and be prepared to respond to emergency situations.

2.3.2 The contractor/supplier shall provide emergency response procedures for the jobsite, and shall communicate such procedures to its employees. Emergency response procedures shall include the identification of any emergency alarms and warning systems, a list of emergency phone numbers, identification of emergency evacuation assembly areas, placement and use of emergency equipment and procedures for notification of local authorities, agencies, and the Messer representative.

2.3.3 Each contractor/supplier shall have at least one certified person trained in first aid and CPR available on site. The contractor/supplier shall have readily available the names and locations of off-site medical personnel to handle major occurrences. Adequate first aid and emergency medical equipment shall be provided as necessary. The name(s), contact number(s) and copies of the first aid and CPR cards must be submitted upon request.

2.3.4 The contractor/supplier shall obtain Safety Data Sheets (SDS) and other appropriate information, and shall inform its employees and Messer of any potentially hazardous materials they may be exposed to while in performance of the work. At the contractor's/supplier's request, Messer shall provide this information for products or materials that are supplied by Messer or are under the control of Messer.

2.3.5 The contractor/supplier shall immediately rectify any situation or condition occurring as a result of the work, that could result in injury or illness to personnel at the site, or that could cause an environmental hazard. If such a condition cannot be corrected immediately, the contractor/supplier shall provide temporary barricades and appropriate warning signs and devices necessary for the protection of people, equipment, and property.

2.4 Employee Qualifications and Conduct

2.4.1 The contractor/supplier shall employ or cause to be employed only persons who are fit, qualified, and skilled in the work to be performed. They shall also ensure that employees receive and successfully complete the necessary safety training, and are capable of performing work activities in a safe manner. Documentation of such training shall be available upon request. Additional training may be required when individuals are considered competent personnel on the jobsite. It is the responsibility of the employer to ensure that these individuals receive this training.

2.4.2 Contractor/supplier personnel shall confine their activities to the assigned work areas.

2.4.3 Contractor/supplier personnel shall use only facilities designated by Messer for non-work activities such as smoking, eating, or using the restroom.

2.4.4 Prior to commencing work, the contractor/supplier shall designate a competent person or persons who is capable of identifying existing and potential hazards in the surroundings or working conditions and have the authority to correct any deficiencies. Upon request, the contractor shall provide documented training identifying why this person has been deemed competent. The competent person must be on the jobsite at all times. The Messer representative must be notified of any changes in the competent person status.

2.4.5 If employees are not proficient in English, the Contractor must, at all times provide an interpreter to effectively communicate safety requirements including, but not limited to verbal commands, written notices, signage, alarms and loudspeaker announcements. The interpreter, when necessary, shall ensure that employees understand rules, regulations, and procedures issued by Messer for the jobsite. If it is determined that any Contractor employees are in violation of these requirements, Contractor and its employees may be removed from the jobsite.

2.4.6 The contractor/supplier shall ensure that no firearms, weapons, controlled or illegal substances, or alcoholic beverages are brought onto the jobsite by contractor employees, except as specifically authorized by the Messer representative.

2.4.7 No contractor/supplier employee shall report to work or shall work impaired by any substance, drug, or alcohol, lawful or unlawful. "Impaired" means under the influence of a substance such that the employee's motor senses (i.e., sight, hearing, balance, reaction, reflex), or judgment either are or may be reasonably assumed to be affected. Any violation of this policy may result in removal from the jobsite.

2.4.8 Contractor/supplier employees taking prescription medication that warns against driving or operating machinery shall inform their foremen or safety representative of such.

2.4.9 When vehicles of contractor/supplier employees are on the client's premises or any area associated with the jobsite, the contractor/supplier shall enforce the rules for safe vehicle operation. Drivers shall obey all signs and posted speed limits. Drivers and passengers in vehicles shall wear seat belts.

2.4.10 Employees shall not restrict their ability to hear alarm notifications or other work taking place in the area that may be hazardous, i.e. whistles for crane loads overhead etc., by use of ear buds or headphones.

2.4.11 Threatening, intimidating, coercive, or other unsafe or disruptive behavior such as fighting and horseplay is prohibited.

2.4.12 Sleeping and gambling on Messer jobsites are prohibited.

2.4.13 Contractor/Supplier employees shall confine their activities to areas expressly authorized to them for such use. Activities include: entering the work site premises, parking vehicles, taking breaks, eating, drinking, smoking, and using lavatory facilities. Under no circumstances shall contractor/supplier personnel be allowed to enter, walk through, or loiter in occupied areas or other areas not authorized for their use or entry.

2.5 Safety Processes

2.5.1 All employees working onsite are required to attend the site-specific orientation prior to accessing the site. Project-specific hardhat stickers shall be required for all personnel onsite, and will be issued once their site-specific safety orientation has been completed. The contractor/supplier shall not permit visitors on the jobsite unless they have checked in at the Messer project office and have been given express permission to be present. They are to be accompanied at all times by an authorized contractor/supplier representative.

2.5.2 The contractor/supplier shall orient all authorized visitors to the jobsite concerning safety rules and site hazards. Requirements associated with personal protective equipment and all rules of conduct shall pertain to all visitors.

2.5.3 Site safety inspections shall be conducted by the Messer representative on a regular basis and deficiencies will be logged in Autodesk. Immediate on-the-spot corrections of safety deficiencies shall be performed as necessary. The contractor shall be responsible for conducting their own daily safety inspections of its work activities.

2.5.4 The contractor/supplier shall complete a documented Job Safety Analysis (JSA) for each activity. The JSAs shall be submitted to Messer as required.

2.5.5 Each contractor employee shall attend the site wide morning huddle every morning at the location determined by the project team. After the site wide huddle, each contractor shall conduct a huddle meeting prior to every work shift to discuss the activities of the shift, review JSA(s) and to establish a safe plan of action to accomplish the work. This meeting shall be conducted with all employees working on site by the onsite leader for each contractor. Any changes to the established plan shall be communicated throughout the shift to affected employees.

2.5.6 The contractor/supplier (if on site more than sporadically) shall conduct weekly "tool box" safety meetings with its personnel. The topics for the meeting shall be relevant to the work activity and/or jobsite conditions. It shall provide copies of all such documentation to the Messer representative immediately after the meeting. Everyone on site must attend any scheduled project-wide safety meetings.

2.5.7 The contractor/supplier shall attend a scheduled Preconstruction Safety Meeting before the contractor's/supplier's work begins on the jobsite. Messer reserves the right to require sub-tier contractors/suppliers to participate in this orientation activity. Prior to this meeting the contractor/supplier shall develop a Site-specific Safety Plan detailing the hazards and preventative measures associated with their scope of work. This plan will be reviewed with all necessary parties during the Preconstruction Safety Meeting.

2.5.8 The contractor/supplier shall contact the Messer representative immediately when an OSHA compliance officer arrives at the jobsite. The contractor/supplier shall inform the Messer representative of any employee complaint, incident, etc. that results in or may result in an OSHA inspection.

2.5.9 The contractor/supplier and its employees shall direct all public media inquiries to the Messer representative. At no time shall the contractor/supplier or its sub-tier contractors/suppliers allow or permit media to enter the jobsite without expressed authorization from the Messer representative.

2.6 Housekeeping and Sanitation

2.6.1 **Sort – Just in time Deliveries:** Materials are only allowed to be delivered to the site if they will be installed within a one week time period of delivery. Any materials that will not be installed must be removed from the site.

2.6.2 **Straighten – Organized Material and Equipment Storage:** Materials and equipment must be stored in designated laydown areas. Walking and working spaces must be kept organized at all times. No material or equipment is allowed to be stored in egress/access paths. Storage requirements for exterior and interior spaces are as follows:

2.6.2.1 Exterior: Materials and equipment must be stored on dunnage, pallets or carts.

2.6.2.2 Interior: Materials and equipment must be stored on pallets, carts or racks and easily moveable on wheels.

2.6.3 **Shine – Continuous Daily Cleanup:** Requirements for continuous cleanup for exterior and interior spaces area as follows:

2.6.3.1 Exterior

a) Each Subcontractor shall immediately pick up all of their debris and deposit it into mobile trash carts/hoppers (provided by respective Subcontractor). Each Subcontractor is responsible for emptying these containers into a dumpster provided by the Contractor.

b) Every Subcontractor is required at the end of each and every workday to cleanup and organize equipment, materials and debris from that day's work activities and clean their work area.

2.6.3.2 Interior: Nothing Hits the Floor – Daily cleanup:

a) Every work crew has a cart with necessary cleaning tools. Each Subcontractor shall immediately deposit their debris into mobile trash carts (provide by respective Subcontractor). Each Subcontractor is responsible to remove these carts from the building daily and empty them into a dumpster provided by the Contractor.

b) Every Subcontractor is required at the end of every workday to cleanup and organize equipment, materials, and debris from that day's work activities and sweep their work area.

c) Electrical cords, welding leads, temporary heat, and temporary water lines are to be off the floor 100% of the time and suspended using non-conductive materials

2.6.4 **Standardize – Color Coded Delivery Process:** Each Subcontractor will be designated a specific paint or sticker color (designated by the Contractor and provided by respective Subcontractor) to mark all deliverables to the project. All materials, including but not limited to, pallets, packaging, boxes, buckets, etc., must be marked with their respective paint color. All items that are not marked upon arrival at the project site, will be rejected.

2.6.5 **Sustain – Composite Broom Crew:** Every week, or at Contractor's request, each Subcontractor shall provide personnel to participate in cleaning all unidentified debris and broom sweeping for a full work shift or until complete. This polishing effort is in addition to normal daily cleaning.

2.6.5.1 Each Subcontractor shall provide (1) person for every (10) people working on site for respective company (including subcontractors) to participate in composite crew.

a) Minimum participation by each Subcontractor is (1) person, regardless of number of people Subcontractor has on site up to (10).

b) Participation requirement applies for each week the Subcontractor has personnel on the project site.

2.6.5.2 Each Subcontractor shall furnish all equipment, including but not limited to, brooms, shovels, and dump carts, to complete this activity.

2.6.5.3 Contractor will determine the location and scope of the composite cleaning crew each week as dictated by the project conditions. It is understood that this may include "exterior Subcontractors" need to work inside the building and vice versa as project conditions require to maintain the best possible project conditions.

2.7 Full Time Safety Manager Requirements

2.7.1 When a subcontractor is required to provide full-time safety regarding our CCIP or Safety4Site requirements, the following criteria shall be followed:

2.7.2 Selection Requirements for Full-time Safety Professional

2.7.2.1 A qualified safety professional shall be provided to maintain safety standards on Messer projects. If the subcontractor cannot provide a qualified safety professional they are to provide Messer safety department with a plan of who they propose to be the alternative person.

2.7.2.2 An alternative person providing safety oversight must be at a Superintendent or Project Manager level, with a minimum of OSHA 30-hour and at least five years' experience in their role.

2.7.2.3 As part of the approval process:

a) Provide a resume of the proposed safety professional or alternative.

b) Determine safety manager experience in conjunction with scope of work.

c) Request references if subcontractor proposes a safety professional from a third party consulting company and is not an employee of the subcontractor.

d) Request and hold an onsite interview to sit down with the safety professional the subcontractor is proposing.

2.7.3 Responsibilities of the Full-time Safety Professional

2.7.3.1 Take full responsibility for all subcontractor workers and their safety performance.

2.7.3.2 Be responsible for subcontractor's actions; ensuring they have the tools, skills and knowledge to do the task/job correctly.

2.7.3.3 Know, understand and follow all OSHA, Messer, owner and CCIP compliance requirements, policies and procedures.

2.7.3.4 Ensure responsibilities for lower tier subcontractors that come onsite to perform tasks for the subcontractor—e.g., concrete coring/cutting, scaffolding, etc.

2.7.3.5 Ensure all injuries and incidents—Safety4Sites, near misses, property damage, etc.—are reported immediately and supported with accident investigation and root cause analysis if required.

2.7.4 Roles of the Full-time Safety Professional

2.7.4.1 **Daily**

a) Attend all morning huddle meetings.

b) Attend POD and Weekly Work Plan Meetings (be prepared and bring up safety concerns).

c) Review your crews' JSA's for quality of information and that there is one for every task.

d) Review daily permits (if applicable) are filled out and reviewed with Messer project team.

e) Ensure crews plan for and have the correct resources and tools.

f) Ensure that all aspects of the 5S process is being followed.

g) Utilize Messer's Stop Work Authority program when tasks or conditions change, or when unknown hazards arise. Ensure work stops and the work crews revise and review the JSA's to reflect all changes.

h) Complete daily safety walks of your work areas and crews.

i) Documented comprehensive safety walks three times a week.

2.7.5 Communicate Safety

a) Communicate all risks and hazards with the work crews.

b) Listen and respond to safety concerns from Messer or other subcontractors.

c) Lead weekly Toolbox Talks and Safety Alert information (provide Messer signed copies).

d) Respond to any safety observations that have been recorded, close out the safety observations.

3.0 Safety Requirements

3.1 Personal Protective Equipment (PPE)

3.1.1 Hardhats meeting American National Standards Institute (ANSI) Z89.1 specifications shall be worn at all times by all personnel at the work site. Hard hats shall be worn with the brim facing forward, unless a welding shield (or other device, which prevents such) is in use. This requirement specifically includes all work completed during the finish stages of the project.

3.1.2 Safety glasses (including safety prescription eyewear) with attached side shields meeting the American National Standards Institute (ANSI) Standard Z87.1, latest issue or over the glass protection shall be worn at all times on Messer projects through the finish stages. The only exceptions will be during scheduled breaks away from potential eye hazards, while in a trailer performing office functions or in a fully enclosed cab of a truck/equipment.

3.1.2.1 Appropriate shaded/filter lenses shall be required to protect against radiant energy such as during welding. Suitable laser safety glasses shall be used as required, to protect against the specific wavelength of the laser and be of optical density adequate for the energy being used.

3.1.2.2 Tinted safety glasses are not permitted for general use indoors.

3.1.2.3 Safety goggles and/or tight-fitting safety glasses should be worn for work activities where hazards dictate (e.g. dusty environments, overhead demolition work, etc.).

3.1.3 Face protection is required in addition to safety glasses when potential exposure exists to particulate matter generated by hammering; chipping; welding; grinding; cutting; heating; burning; insulation handling; overhead activities; or where there is possible exposure to hazardous chemicals. Examples include, but are not limited to:

3.1.3.1 Any time one is cutting or grinding with an abrasive wheel. This is includes, but is not limited to target saws, chop saws, angle grinders, etc.

3.1.3.2 When pouring concrete, operating the pump truck hose and using the vibrator.

3.1.4 When handling acids, caustics, and chemicals with corrosive or toxic properties, suitable protection, such as acid suits or chemical resistant aprons and gloves, shall be worn to prevent accidental contact with the substance.

3.1.5 Personnel shall wear personal clothing and footwear that is safe and proper for the work and any jobsite exposures. At a minimum, full-length trousers and shirts with a minimum 4- inch sleeve are required.

3.1.6 High visibility clothing (shirt, vest, or jacket) shall be worn at all times on the project and must be the outer-most garment. Acceptable colors include fluorescent yellow/green and fluorescent orange/red. Messer will provide notification if and/or when this requirement does not apply to a particular project.

3.1.7 High-visibility clothing with retro-reflective striping shall be utilized when working in or around roadways, heavy equipment and if lighting conditions are poor. Clothing must meet the ANSI Class applicable to the work being performed.

3.1.8 Work boots (covering over the ankle) are required for all contractor personnel on site. They are also required for suppliers when they are exposed to hazards affecting the feet. Tennis shoes or work shoes are not acceptable, regardless of steel/composite toe or other safety ratings. Contractor/supplier personnel shall wear boots that are commensurate with the hazards of the work and the work site area. This includes rubber boots when working in or near damaging liquids or concrete, safety-toe boots when moving or rigging heavy objects and metatarsal protection when jackhammering or tamping activities.

3.1.9 100% hand protection is required on all Messer projects. Gloves shall be worn by all personnel on the project site at all times, including supervisory personnel. Gloves must be task appropriate and meet ANSI/ISEA 105-2016 American National Standard for Hand Protection Classification.

3.1.9.1 If hand protection is considered infeasible or creates a greater hazard for a particular task, a written safe plan of action outlining the reason for the variance must be approved through Messer prior to beginning the activity.

3.1.10 Cut resistant sleeves shall be worn during demolition or other activities where puncture, laceration and/or burn hazards to the arms are present.

3.1.11 The contractor/supplier shall familiarize itself with and comply with more rigorous personal protective equipment standards as required on specific projects.

3.2 Elevated Work and Fall Protection

3.2.1 100% fall protection is required on Messer jobsites, for activities, which involve work at elevations of 6 feet or higher. 100% fall protection is also required at lower heights if the individuals are working above dangerous equipment. 100% fall protection is required for all crafts, trades, including steel erection and activities associated with these types of elevations. The use of ladders and the construction of scaffolding may not be applicable in section 3.2, and are addressed in section 3.3 and 3.4 in this program.

3.2.2 Prior to the start of work, contractor/supplier representatives involved with elevated work shall meet with Messer representatives to review the scope of work, especially as it pertains to fall protection requirements and needs. As part of the Contractor Preconstruction Safety Meeting, an evaluation should be made of the possible fall hazards and effective safety responses to such.

3.2.3 Guardrail systems shall be the preferred choice of protection for all elevated work activities. If the contractor/supplier can prove that guardrails are infeasible or create a greater hazard, as defined in Subpart M of the OSHA Construction Standards, it may, where permitted by a Messer Safety Leadership, implement the following alternative systems in response to the fall hazards:

3.2.4 Personal fall arrest systems;

3.2.4.1 Warning lines; a) Required to be a minimum of 15 feet back from leading edges for all trades, excluding roofers.

3.2.4.2 Controlled access zones;

3.2.4.3 Safety net systems

3.2.4.4 Safety monitoring systems will not be permitted.

3.2.5 These alternative systems may be utilized, with approval, in controlled work environments provided the following is established:

3.2.5.1 Explanation in writing is submitted to the Messer Safety Department as to why the use of guardrail systems is infeasible or creates a greater hazard/ harm to the individuals involved.

3.2.5.2 Development of a written fall protection plan, utilizing the Messer Fall Protection Template which outlines all elements involved with the usage of personal fall arrest systems, warning lines, controlled access zones, or safety monitoring systems; and

3.2.5.3 Orientation process, which communicates this information to the individuals involved with the work activity, prior to beginning work.

3.2.6 The purpose of this extensive pre-planning is to ensure that the most effective and appropriate fall protection systems are used whenever possible. It is also designed to ensure that those individuals involved with the usage of personal fall arrest systems, warning lines and controlled access zones truly understand the detail and organization required. Finally, the pre-planning will also highlight who is permitted (due in part to thorough training and communication) to work with these systems.

3.2.6.1 Horizontal systems must be attached to a fixed anchorage and may not be linked together.

3.2.7 Cable guardrail systems shall be a minimum 3/8 inch cable and shall be equipped with turnbuckles for tightening where necessary. A minimum of 3 clamps at each turn back is required.

3.2.8 The procedures developed in response to the identified fall hazards shall be reviewed with all individuals exposed to the hazards. Feedback should be encouraged so as to ensure that the most effective systems are utilized.

3.2.9 Contractors/suppliers shall be responsible for ensuring that their employees using fall protection systems have been adequately trained. Communication on the following shall be included in the training:

3.2.9.1 Fall hazards associated with the elevated work;

3.2.9.2 Elements of the fall protection systems utilized;

3.2.9.3 Fall protection equipment used;

3.2.9.4 Elements of a fall protection plan, if applicable; and

3.2.9.5 Proper inspection techniques of fall protection equipment.

3.2.10 An inspection process of fall protection systems shall be established. Individuals shall visually inspect the fall protection equipment before each use. Some equipment requires documented inspections by its manufacturer on a routine basis. This equipment shall have evidence of the inspection and re-certification process on it. This information shall be reviewed before the equipment is used.

3.2.11 Any fall protection equipment that is defective, damaged, or has been subjected to an impact shall be identified and removed from service immediately. Fall protection equipment must be used for fall protection purposes only. Rigging items are not to be used for fall protection, if an item is used for rigging it can never be used as a fall protection device.

3.2.12 The contractor/supplier retains all responsibility for the effective implementation of fall protection programs as well as all other safety programs, regardless of any review by Messer.

3.3 Scaffolding and Mobile Elevating Work Platforms

3.3.1 Each part of supported scaffolding shall be capable of supporting at least 4 times its intended load. All work platforms shall be fully decked between guardrails. All scaffold planks shall be overlapped to a minimum of 12 inches or secured as with cleats to prevent movement.

3.3.2 Footings shall be sound and rigid. Concrete blocks, bricks, barrels or similar items shall not be used for supports. Supported scaffold poles, legs, posts, frames, and uprights shall bear on base plates. Base plates shall bear on mudsills or other adequate firm foundation.

3.3.3 Supported scaffold towers with a height-to-base width ratio greater than 4:1 shall be restrained from tipping by tying, guying or other equivalent bracing. Ties shall be rigid and designed to prevent the scaffold system from tipping into or away from the structure. Supported scaffold more than 3 feet wide shall be secured against displacement every 26 feet vertically and every 30 feet horizontally.

3.3.4 All manufacturers' bracings, couplings, or stacking and vertical locking pins shall be installed.

3.3.5 Guardrails and toe boards must be provided on all sides and ends of scaffolds 6 feet or more in height. Open-sided ends shall be guarded.

3.3.6 If the scaffold platform is less than 45 inches wide, as with Perry and Baker type utility scaffolds, guardrails shall be installed at heights of 4 feet or higher. Additionally, these scaffold systems shall have appropriately installed outriggers or otherwise be restrained from tipping if the working platform is at a height-to-base width ratio greater than 3:1.

3.3.7 Scaffolds shall be provided with an access ladder or another equally safe access method. Vertical ladders or ladder frames shall not be used where the total length of a climb equals or exceeds 24 feet, unless an approved fall protection device is installed and used while climbing.

3.3.8 Rolling scaffolds shall have their wheels locked when in use. No scaffold shall be moved while occupied, or while tools or equipment is on it.

3.3.9 Contractors/suppliers must have a competent person involved with the erection, dismantling, and inspection of scaffolding. Anyone erecting or dismantling scaffolding must be trained and be able to provide proof of training.

3.3.10 The contractor/supplier shall inspect all elevated work platforms each day. Inspections shall be documented on an inspection log or through a tagging system. Scaffolding that is incomplete or unsuitable for use shall be tagged as such at or near the access point. Defects shall be corrected prior to use.

3.3.11 Appropriate protection shall be provided for individuals working in the area of scaffolding, or for those who are exposed to overhead hazards while working on scaffolding.

3.3.12 Contractor/supplier shall have a competent person determine the feasibility and safety of providing fall protection for employees erecting or dismantling supported scaffolds. Employers are required to provide fall protection for employees erecting or dismantling supported scaffolds where the installation and use of such protection is feasible and does not create a greater hazard.

3.3.13 Mobile Elevated Work Platforms shall be inspected and controls tested daily to verify that the equipment and all its components are in a safe operating condition. Do not operate any mobile elevated work platform if any components are defective until it is repaired by a qualified person.

3.3.14 Only properly trained and authorized persons shall operate mobile elevated work platforms. Refer to occupant training requirements.

3.3.15 All mobile elevated work platforms, including scissors lifts, require the use of a full body harnesses with either a 4 foot lanyard or retractable in any elevated position.

3.3.16 Employees shall always stand firmly on the floor of the basket and shall not sit or climb on the edge of the basket or use planks, ladders or other devices for a work position.

3.3.17 Work areas and travel paths shall be inspected to ensure that any hazards that may cause the mobile elevated work platform to become unstable or roll over are eliminated.

3.4 Ladders

3.4.1 All contractors/suppliers shall use ladders which are Type 1 or better; approved for industrial usage.

3.4.2 Metal stepladders and step stools are prohibited. Metal straight ladders and extension ladders must not be used where possible exposure to electrical hazards exists.

3.4.3 Job-made ladders shall be built for their intended use. Double cleats shall be used if more than 25 workers are using the ladder, or two-way traffic is expected.

3.4.3.1 Single cleat ladders shall not be more than 30 feet between the base and the top landing; double cleat ladders shall not be more than 24 feet.

3.4.4 Ladders shall not be used as platforms or scaffold planks.

3.4.5 Ladders shall be kept free of grease and oil. Personnel going up or down shall face toward the ladder and grip the side rails with both hands. Tools or other objects shall be hoisted up as necessary, or carried in a tool pouch and not carried by hand up or down the ladder.

3.4.6 Extension and straight ladders must be set at an angle of 1 foot horizontal for every 4 feet of working ladder length. Extension and straight ladders shall be tied off at the top and/or bottom when in use. Until secured, a second person shall be used to keep the ladder from slipping. Only one person shall be allowed on a ladder at a time.

3.4.7 Ladders shall not block doorways, passages, high traffic areas, etc. unless the area is barricaded. Warning signs shall be posted, or a spotter shall be involved.

3.4.8 Platform or podium type stepladders shall be used in lieu of traditional stepladders. They must be fully open with spreaders locked when in use. Traditional stepladders shall not to be used.

3.4.9 Damaged ladders shall be taken out of service. Ladders shall not be painted, except for stenciling for identification purposes. Ladders shall be inspected daily prior to use.

3.5 Electrical Safety

3.5.1 All electrical equipment, including main feeder lines, branch circuits, and grounding systems shall be installed in accordance with the National Electrical Code as a minimum requirement.

3.5.2 A minimum of 3 feet of clearance shall be maintained around energized electrical parts.

3.5.3 Cabinets, boxes, fittings, or other forms of enclosures shall be used when energized parts of 50 volts or greater are exposed. Entrances to rooms containing energized electrical parts shall be marked with warning signs and access shall be controlled by the exposing contractor. Covers shall be approved. Cardboard and magnetic covers are not approved as temporary covers. All electrical equipment shall be labeled in accordance with the requirements of NFPA 70e.

3.5.4 The metal parts of portable and/or plug connected equipment shall be protected through 3 wire cords and plugs or shall be double insulated.

3.5.5 All power tools and equipment connected by cord and plug, and all extension cords must be visually inspected. GFCI devices must be inspected and tested prior to each use.

3.5.6 Extension cords must be of the three-wire grounded type S, SE, SO, ST and rated for hard service and a minimum 14 gauge in size. No flat cords are allowed. Cords shall not be spliced or taped. Damaged cords shall be removed from service and tagged as defective, or rendered unusable by removing the male plug end. All cords should be checked for proper polarity.

3.5.7 Cords shall be protected from traffic, sharp edges and corners. Extension cords and cables passing through high traffic areas shall be elevated or covered for protection. Extension cords shall not be fastened with staples, hung from nails or suspended with wire. Extension cords shall be arranged to eliminate any tripping hazards.

3.5.8 All electrically powered equipment, including motors, transformers, generators, welders, and other machinery, shall be properly grounded, and insulated.

3.5.9 GFCI protection is required on construction sites for all 120-volt, single-phase, 15- and 20-ampere receptacle outlets that are not a part of the permanent wiring of the structure and are in use by employees. GFCI protection is specifically required when using temporary electric or when extension cords are used.

3.5.10 Secondary external GFCI protection (pigtails) are required on all generator power including, welding machines, mobile light towers, etc. This is in addition to any GFCI protection built into the outlet.

3.5.11 Electrical equipment shall be periodically inspected and repaired as necessary. The electrical contractor shall inspect the temporary power, including the GFCI devices and lights, on a weekly basis. All temporary power receptacles shall be numbered and labeled to confirm a weekly inspection has been completed. Results of these inspections will be documented, and provided to Site Management.

3.5.12 Work on live or energized systems is generally not permitted. If such work is unavoidable, an energized work plan in compliance with NFPA 70e must be developed, reviewed and accepted by Messer prior to commencement of work.

3.5.13 When energized parts are exposed barriers, guards and signage shall be used to prevent the area involved in electrical work from becoming an access point.

3.5.14 All contractor/supplier personnel trained and authorized to work on, or around energized electrical systems shall be required to have all required PPE and arch flash protection required by NFPA 70e.

3.5.15 Construction/temporary lighting shall meet NEC and OSHA requirements as well as maintaining a minimum of five-foot candles and/or more where the standards require it. Each room shall have at least one active temporary lamp until such times that the permanent lighting systems are activated.

3.5.16 Temporary lighting bulbs shall be protected from breakage. Metal case sockets shall be grounded. Do not suspend temporary lights by their electrical cords unless it has been designed for this use. GFCI protection is required when lighting is located in wet or conductive locations. Temporary lighting must be on a dedicated circuit.

3.5.17 Temporary task lighting shall be mounted to a stand or secured to a base. Temporary task lighting shall meet all other applicable standards associated with temporary lighting as indicated in NEC and OSHA.

3.6 Lockout, Isolation, and Tag out of Equipment

3.6.1 Equipment that could present a hazard to personnel if accidentally activated during the performance of installation, repair, alteration, cleaning, or inspection work shall be made inoperable and free of stored energy and/or materials prior to the start of work. Such equipment shall be secured where possible by locking and tagging methods.

3.6.2 Where equipment is subject to unexpected movement such as rotating, turning, dropping, falling, rolling, sliding, etc., mechanical and/or structural constraints shall be applied to prevent such movement.

3.6.3 The use of tags without locks shall be permitted only when the use of locks is physically impossible. Strict controls and supplemental protective measures such as physical separation, blocking, removing fuses, or positioning an attendant by the tagged equipment shall also be utilized.

3.6.4 Where safety locks are used for locking out or isolating equipment, the lock shall be specially identified and easily recognized as a safety lock. All such locks shall be individually keyed with the key(s) in the control of the authorized individual. The use of a master key to open any safety locks is prohibited.

3.6.5 Where more than one person is assigned to work on a piece of equipment or system, each person shall be responsible for applying their own individually keyed lock to each lockout device. When this is not possible, a group/complex lockout/tag out procedure is acceptable, provided that a plan is developed and communicated to the Messer representative before lockout takes place.

3.6.6 Controls that must be de-energized during the course of work shall be locked and tagged accordingly. De-energized equipment and circuits shall be rendered inoperative, and tagged at points where the equipment can be energized. The contractor/supplier shall provide a written lockout/tag out program.

3.7 Tools

3.7.1 All tools shall be used in accordance with the manufacturer requirements and recommendations. Guards must remain in place and operational at all times.

3.7.2 General/Hand Tools

3.7.2.1 Impact tools, such as drift pins, wedges, and chisels, shall be kept free of mushroomed heads.

3.7.2.2 Any tool found not in proper working order, or that develops a defect during use, shall be immediately removed from service and not used until properly repaired.

3.7.2.3 Personal protective equipment shall be in accordance with 3.1 Personal Protective Equipment (PPE) of these requirements and manufacturer recommendations.

3.7.2.4 All tools shall be used with the correct shield, guard, or attachment recommended by the manufacturer. Angle grinders must have guard and side handle in place.

3.7.3 Electric Tools

3.7.3.1 Electric power operated tools shall either be double-insulated type or grounded.

3.7.3.2 The use of electric cords for hoisting or lowering tools shall not be permitted.

3.7.4 Pneumatic Tools

3.7.4.1 Pneumatic power tools shall be secured to the hose or whip by some positive means to prevent the tool from becoming accidentally disconnected.

3.7.4.2 Safety clips or retainers shall be securely installed and maintained on pneumatic impact (percussion) tools to prevent attachments from being accidentally expelled.

3.7.4.3 All pneumatically driven nailers, staplers, and other similar equipment provided with automatic fastener feed, which operate at more than 100 psi pressure at the tool, shall have a safety device on the muzzle to prevent the tool from ejecting fasteners, unless the muzzle is in contact with the work surface.

3.7.5 Powder Actuated Tools

3.7.5.1 Only employees who have proof of training, in the operation of the particular tool in use shall be allowed to operate a powder-actuated tool.

3.7.5.2 The tool shall be tested each day before loading to see that safety devices are in proper working condition. The method of testing shall be in accordance with the manufacturer's recommended procedure.

3.7.5.3 Warning signs shall be posted at access points to areas where powder-actuated tools are being used. This signage shall include at minimum "CAUTION POWDER- ACTUATED TOOL IN USE."

3.7.5.4 Loaded tools shall not be left unattended.

3.7.5.5 Storage of powder cartridges and disposal of expended or unexpended cartridges shall comply with the manufacturer's recommendations.

3.8 Confined Space Entry

3.8.1 All confined space activities must be reviewed with the project management team prior to commencement of the related work activities. Confined space entry permits are required as part of the entry process.

3.8.2 Confined spaces, including tanks, manholes, vessels, containers, pits, bins, vaults, tunnels, shafts, trenches, ventilation ducts, or other enclosures where known or potential hazards may exist, shall not be entered without strictly adhering to a confined space entry policy, which meets the requirements of 29 CFR 1926 Subpart AA.

3.8.3 Prior to entering the confined space, the area shall be completely isolated to prevent the entry of any unauthorized individuals, hazardous substances, or materials, which threaten the safety of the entrants and the stability of the space. All energy sources, including stored or residual energy, shall be isolated and/or blanked, and locked out.

3.8.4 The atmosphere shall be tested before entry and monitored to determine if it is safe. Acceptable limits are:

3.8.4.1 Oxygen: 19.5% lower – 23.5% upper;

3.8.4.2 Flammable Gas: Not to exceed 10% of Lower Flammable Limit (LFL);

3.8.4.3 Toxic Contaminants: Not to exceed the Permissible Exposure Level (PEL).

3.8.4.4 Airborne Combustible Dust: Not to exceed its Lower Flammable Limit (LFL)

3.8.5 Continuous atmospheric monitoring shall take place throughout the entry. Monitoring results shall be documented on the entry permit, with the initials of the individual conducting the testing.

3.8.6 Contractors/suppliers shall complete a confined space entry permit before permitting workers to enter the space. This document shall be reviewed and approved via a signature by the entry supervisor. The contents of the completed permit shall be reviewed with the entrants before entering the space.

3.8.7 The confined space shall have an attendant monitoring the activities within the space. This individual shall be in constant communication with the entrants inside the space. At all times, the attendant shall know who is inside the space. The attendant shall not have any other responsibilities than monitoring the space. He/she may not enter the space to perform rescue unless relieved of his/her duties as an attendant.

3.8.8 Adequate ventilation shall be provided to establish and maintain a stable atmospheric environment. Ventilation systems shall be designed for use in confined spaces.

3.8.9 Non-entry rescue systems shall be designed for the retrieval of humans, and shall not be used for equipment purposes. Entrants inside the space shall wear full body harnesses, and shall be connected to the retrieval system.

3.8.10 Rescue procedures for all confined spaces shall be established prior to entry. If a space is classified as permit-required, contractors/suppliers shall ensure proper rescue provisions are provided, including a trained entry/rescue team when required.

3.8.11 All individuals involved in confined space activities shall have extensive training, including hands-on experience with the safety equipment involved. Documentation of required training shall be submitted to Messer prior to the start of any confined space work activities.

3.8.12 Once the confined space work has been completed, the entry permit shall be canceled. A copy of the canceled permit shall be given to the Messer representative.

3.9 Excavation and Trenching

3.9.1 All underground and overhead utilities within the Excavation/Trenching or Penetration work area shall be surveyed and positively identified before excavation work commences. It is the responsibility of every subcontractor performing an excavation to call the 811 Utility Protection Service in their state to obtain an individual reference/dig number. No subcontractor shall work under another subcontractor's ticket number, including the Contractor's.

3.9.2 Since 811 will only mark utilities in the Right-of-Way, a private locating service must also be used to locate any utilities not located by 811 inside the project/excavation area. Obtain as built drawings showing the location of all known/found utilities with in the excavation site and reference the Contract Documents to verify there are no utilities that were not marked by the Locating Service.

3.9.3 811 Procedures:

3.9.3.1 Assess the area to be excavated, gather all the information that will needed to complete the locate work order form.

3.9.3.2 Pre-mark the location where the excavations will occur in white paint, flags or both.

3.9.3.3 Contact 811 and provide details of the excavation.

3.9.3.4 Obtain reference/ticket number, record the number on the Excavation Permit and keep it for the duration of the excavation or longer is necessary.

3.9.3.5 Utility owners will mark any existing utilities around the excavation site.

3.9.3.6 Wait the required amount of time before commencing excavation.

3.9.3.7 Advance notice needed to inform 811 of excavation.

a) IN – 2 working days.

b) OH – 2 working days

c) KY – 2 working days

d) TN – 3 working days

e) NC – 3 working days

f) SC – 3 working days

3.9.4 Protect and preserve the markings of tolerance zones of underground utility facilities until those markings are no longer required for proper and safe excavations. If markings are destroyed or lost do not repaint the markings, contact 811 to remark the found/known utilities.

3.9.4.1 Markings are only valid for the following amount of time before 811 has to be notified again of the excavation.

a) IN – 20 days

b) OH – as long visible

c) KY – 21 days

d) TN – 15 calendar days

e) NC – 15 days

f) SC – 15 days

3.9.5 Private Property Locating:

3.9.5.1 ALL excavations/borings/mass excavations/ground penetrating activities must be coordinated with the Contractor and the Owner to have a 3rd Party Locating Service survey the areas of excavation that are not in the right-of-way.

3.9.5.2 The subcontractor must coordinate with the Contractor and contact the designated 3rd Party Locating Service prior to any ground penetrating activities to have the service locate the area where the activities occur.

3.9.5.3 Prior to arrival of the 3rd Party Locating Service, the area that needs surveyed should be painted or marked with flags.

3.9.5.4 The 3rd Party Locating Service shall mark all found utilities with paint or flags.

3.9.5.5 All markings must be protected and preserved so the location of the utility is known at all times.

3.9.5.6 Take pictures and keep records of the survey to include with the Excavation Permit

3.9.6 Ground Penetrations:

3.9.6.1 Prior to any excavation beginning, the scope of work must be reviewed with the Contractor's project management team to discuss the process and hazards related to task.

3.9.6.2 Daily, all contractors must complete the Messer Excavation Permit and it be signed by the Contractor's project representative.

3.9.6.3 Protect and preserve the markings of utilities until those markings are no longer required for proper and safe excavations.

3.9.6.4 The exact location and depth of any known/found utilities within 24 inches of the excavation must be identified by one of the following means:

a) Hand digging

b) Pot holing

c) Hydro/Vacuum excavation

3.9.6.5 Maintain a minimum of 24 inches (tolerance zone) between the utility and the cutting edge or point of powered equipment.

3.9.6.6 When approaching and excavating within the tolerance zone of underground utility facilities with powered equipment, the subcontract must provide a spotter to visually monitor the excavation activity for any indication of the underground utility.

3.9.7 A competent person shall perform daily documented inspections of excavations and shall be responsible for soil classification. All excavation documents shall be maintained on site and shall be available for review by Messer. Inspections shall occur before the work begins, and as needed throughout the shift. Inspections shall also occur after rain, snow, thaw or other hazardous conditions affect the excavation. If evidence of a hazardous condition is apparent, all work in the excavation shall cease until necessary corrections have been made by the competent person.

3.9.8 Benching, sloping, shielding or shoring shall be used in all excavations 5 feet or more in depth except when excavating in stable rock. Shoring of excavations less than 5 feet deep may be required if examination by a competent person reveals ground movement or evidence of a possible cave in.

3.9.9 Excavations below the footings of foundations, retaining walls, or structures themselves shall not be permitted, except in stable rock or if the wall is underpinned and steps have been taken to ensure stability of the structure. Support systems shall be planned and designed by a qualified person – usually a professional engineer.

3.9.10 If forms or other structures are installed or constructed in an excavation so as to reduce the dimension (measured from the forms/structure to the sides of the excavation) to 15 feet or less (measured at the bottom of the excavation), a trench inside of an excavation has been created. This may affect the access and egress associated with the excavation, as well as with the trench.

3.9.11 Water shall not be permitted to accumulate in an occupied excavation. Existing or flowing water shall be removed prior to and during entry into the excavation.

3.9.12 Support systems shall be planned and designed by a qualified person (generally a professional engineer) when the excavation is in excess of 20 feet deep, adjacent to structures, or subject to water or vibration. All shoring systems shall be designed by a qualified person, or built in accordance with OSHA Subpart P.

3.9.13 Excavations 4 feet or more in depth and occupied by personnel shall be provided with ladders or other effective means of exit. In trenches, these access points must be located within 25 feet of the area in which the individuals are working.

3.9.14 Adequate barrier protection for excavations shall be provided around all excavations that are 6 feet or greater in depth. This shall consist of snow fence or hard physical barriers placed at minimum 4 feet from the excavation.

3.9.15 If the vertical wall of an excavation is 6 feet or greater, fall protection is required.

3.9.16 When an atmospheric condition may exist and/or develop in an excavation, atmospheric monitoring of the excavation shall take place before and during entry. Ventilation shall be provided when the monitoring indicates the necessity of such.

3.9.17 Excavated earth or other materials shall be placed at least 2 feet from the edge of the excavation.

3.9.18 At no time shall equipment (not directly associated with the excavation work) be operated within 2 feet of any excavation. If it is necessary to operate heavy equipment on a level above and near an excavation, the sides of the excavation shall be sheet-piled, shored, and braced as necessary to resist additional pressure. Barricades or stop logs shall be used around an excavation when mobile equipment is used near an excavation.

3.9.19 Backfilling and removal of trench supports shall progress from the bottom of the trench. Ropes shall be used to pull out the jacks after all workers have cleared the trench.

3.9.20 Caisson entry shall be performed in accordance with Associated Drilled Shaft Contractors' (ADSC) Recommended Procedures for Entry of Drilled Shaft Foundation Excavations. Where access and egress is restricted and/or atmospheric conditions could be expected to present a hazard, this work activity should be performed following the permit-required confined space process.

3.10 Mobile/Heavy Equipment

3.10.1 The design capacity of any piece of equipment shall not be exceeded, nor shall the equipment be modified in any manner that alters the original safety or capacity factor.

3.10.2 Mobile equipment shall be fitted with suitable alarms and motion sensing devices. If no backup alarm is present, a designated spotter shall be provided whenever the equipment is backing.

3.10.3 Employees operating mobile/heavy equipment shall not be permitted to use cellular phones while equipment is operating or in transit.

3.10.4 A safety observer shall be assigned to watch the movement of heavy mobile equipment where such movement may cause a hazard to other personnel, or where equipment could hit overhead lines or structures. The observer shall also ensure that people are kept out of the way or path of suspended loads, and clear of the mobile equipment.

3.10.5 Equipment shall be inspected by the contractor/supplier using and/or controlling such equipment prior to its use on the job, and periodically thereafter to ensure that it is in safe working order. Defective equipment shall be removed from service immediately, and a warning tag attached. Equipment with exposed gears, belts, couplings, etc. must be provided with proper guards.

3.10.6 Under no circumstances shall any piece of equipment or a load come within 10 feet of any energized overhead power line.

3.10.7 Only trained, qualified, and authorized personnel shall operate mobile equipment. Documentation of training shall be available upon request. Contractor personnel shall not operate Messer equipment unless written authorization is provided by the Messer representative.

3.10.8 Loads shall not be suspended from the forks of a forklift or other material handling equipment. An appropriate, manufacturer approved attachment including a locking latch or shackle shall be used to handle suspended loads.

3.10.9 Equipment with an elevated load or left running shall not be left unattended for any period of time. Loads must be grounded, the machine must be turned off, and parking brake set when machine is unattended. Equipment is considered unattended when the operator is more than 25 feet away from the equipment or any time the operator is not in view of the equipment. This does not include road vehicles such as: trucks, cars or tractor trailers.

3.10.10 Only trained and qualified persons shall perform maintenance on mobile/heavy equipment. A safe plan of action must be written and communicated anytime the equipment must be serviced while left running.

3.11 Cranes and Rigging

3.11.1 All crane operations must be in accordance with the requirements in 1926 Subpart CC—Cranes and Derricks in Construction.

3.11.2 The contractor/supplier shall be required to attend any scheduled pre-construction meetings focusing on crane signaling and/or other specific safety issues whenever its work involves or is associated with cranes or whenever the Messer representative deems is necessary.

3.11.3 Contractors/suppliers shall ensure that all crane operators are certified/licensed to operate the equipment safely and are trained and evaluated before operating the equipment. The contractor shall provide Messer with documentation of all qualified operator training at the time the individual arrives on the jobsite.

3.11.4 Pre-lift meeting needed each shift. The crane operator/project team to ensure these occur.

3.11.4.1 The operator shall hold a daily pre-lift safety meeting at the lift site with all personnel taking part in the lift.

3.11.4.2 The meeting shall include a review of the scope of lift logistics and identification of qualified riggers and verification that rigging is inspected and these personnel understand their respective roles.

3.11.4.3 The pre-lift meeting shall cover the following minimum requirements

a) Qualified rigger identification

b) Lift logistics, safety requirements, materials, equipment

c) Follow the 1926.1404 where applicable

3.11.4.4 Pre-lift meeting will be documented and signed by the operator and qualified riggers, to indicate they fully understand the scope of the lift.

3.11.5 Contractors/suppliers shall ensure that crane inspections are performed as required by a qualified inspector. Special attention shall be given to such items as cables, hoses, guards, booms, blocks, hooks, and safety devices. Prior to operation, current, annual and monthly inspection documentation must be provided to Messer and made available on the piece of equipment. Additionally, shift inspection documentation must be recorded and submitted to Messer at a minimum weekly and/or upon request.

3.11.6 A/D director and qualified riggers shall be used for all hoisting operations associated with assembly and disassembly work.

3.11.7 Pre-lift equipment inspection—applies to all rigging:

3.11.7.1 All rigging and equipment shall be inspected by qualified personnel prior to each shift and as necessary during use. Defective rigging equipment shall be removed from services

3.11.7.2 Inspection will be documented and subcontractor shall submit signed inspection to Messer for approval prior to lift.

3.11.8 Employees engaged in hoisting and rigging activities shall be trained and qualified in the activities they are performing and shall be identified with a Blue Vest. This includes qualified riggers, signal persons and personnel landing/receiving the load.

3.11.8.1 All qualified Messer riggers shall be verified by the Craft Department and provided a blue rigger vest.

3.11.8.2 Subcontractor management shall be required to provide mandatory proof of operator and rigger training—to verify and validate the training and qualifications of their operators/riggers and furnish a blue rigger vest to only those riggers meeting qualification.

3.11.8.3 Qualified riggers are accountable for and must wear the blue vest at all times.

3.11.9 All contractors must ensure that rigging equipment:

- **3.11.9.1** Has permanently affixed and legible identification markings as prescribed by the manufacturer that indicate the recommended safe working load and
- **3.11.9.2** Selection of rigging equipment is applicable to the load to be carried
- **3.11.9.3** Not be loaded in excess of its recommended safe working load as prescribed on the identification markings by the manufacturer; and
- **3.11.9.4** Not be used without affixed, legible identification markings.
- **3.11.9.5** Rigging equipment, when not in use, shall be removed from the immediate work area so as not to present a hazard to employees.

3.11.10 A qualified signal person shall always be used during operation and travel of the crane load.

3.11.11 Tagline must be used on all loads to prevent rotation of the load. Taglines must be at least 6ft long or longer as necessary to safely control the load without having to stand directly under the load.

3.11.12 Whistles shall be used to notify workers in the area that a load that is being moved and a hazard exists.

3.11.13 If any part of the equipment, load line or load (if operated up to the equipment's maximum working radius in the work zone) could get closer than 20 feet to a power line the requirements of Option 1, 2, or 3 of 1926.1408 shall be met.

3.11.14 Operators shall not be engaged in activities that distract their attention while operating.

3.11.15 Generally, cranes shall not be left unattended while running. However, when crane operation is frequently interrupted during a shift and the operator must leave the crane, the engine may remain running and the following conditions shall apply:

- **3.11.15.1** Land any load, bucket, lifting magnet, or other device;
- **3.11.15.2** Disengage the master clutch;
- **3.11.15.3** Set travel, swing, boom brakes, and other locking devices;
- **3.11.15.4** Put controls in the off or neutral position
- **3.11.15.5** Secure the crane against accidental travel;
- **3.11.15.6** The operator shall be situated where unauthorized entry of the crane can be observed; and
- **3.11.15.7** The crane shall be located within an area protected from unauthorized entry.

3.11.16 The swing radius of the crane counterweights must be barricaded.

3.11.17 Working or riding on crane loads suspended, lowered, or hoisted is prohibited except as permitted by, 1926.1431, focusing on crane suspended personnel platforms.

3.11.18 Winch trucks shall not have a load suspended from the hook while traveling. The load shall be secured on the bed of the truck. The hook of a winch truck must be tied down or secured in some manner, and not allowed to dangle freely when traveling.

3.12 Welding and Cutting

3.12.1 In areas where welding or other hot work is conducted. In addition to any permanently placed units, a minimum of one 10 lb. ABC dry chemical extinguisher shall be immediately available in the work area. A fire watch and/or hot work permit may also be necessary.

3.12.2 Adequate ventilation shall be provided to maintain acceptable atmospheric conditions when welding, cutting, grinding, or heating. Where adequate ventilation cannot be maintained, respirators or air hoods shall be used.

3.12.3 Compressed gas cylinders shall be secured in an upright position at all times. Cylinder valves shall be closed when work is interrupted or finished, and when cylinders are empty or being moved.

3.12.4 When cylinders are lifted by hoisting equipment, a basket, cradle, or a similar handling device shall be used. Electromagnet, hooks, ropes, or slings shall not be used to lift cylinders, and cylinders shall not be lifted by their caps.

3.12.5 Oxygen cylinders shall not be stored close to cylinders of acetylene or other fuel gases, and they must be kept clear of fuel oils, grease, etc. Cylinders stored in the open shall be protected from accumulation of ice and snow, and shielded from direct sun when temperatures are high. Compressed gas cylinders shall be stored so as to avoid possible destruction or obliteration of labels or other means of identifying the contents. Oil or other hydrocarbon contamination shall be avoided on all cylinder gauge connections and regulator devices.

3.12.6 Electric arc welding machines shall be disconnected when moved, and turned off when not in use. They shall be disconnected from the primary supply at the end of the workday.

3.12.7 Welding cables shall be positioned so they will not be damaged or present a trip hazard.

3.12.8 The ground return electrode shall be attached directly to the work to prevent current flow through structures and equipment. All welding cables and connections shall be first quality industrial material, and shall be in good repair.

3.12.9 Welding equipment powered by hydrocarbon fuels shall not be used unless proper exhaust venting is provided.

3.12.10 All arc welding and cutting operations shall be shielded by non-combustible or flameproof screen, which will protect employees and other persons working in the vicinity from the direct rays of the arc.

3.13 Lasers

3.13.1 Only employees who are trained and qualified for laser use shall be allowed to use laser equipment. Those employees who are authorized to operate laser equipment shall have proof of such training/authorization in their possession at all times while equipment is in use.

3.13.2 Standard laser warning signs shall be posted at access points to areas where lasers are being used.

3.14 Fire Protection and Prevention

3.14.1 The contractor's/supplier's emergency response procedures shall contain provisions for fires or explosions. Contractor/supplier employees shall know the location of and shall be familiar with the fire control equipment. The phone number of the nearest local fire department shall be readily accessible.

3.14.2 An adequate number of fire extinguishers of the proper type for the materials exposed and the work performed shall be placed in accessible locations based on the work taking place. Individuals who may use these devices shall be trained in their use. Contractors/suppliers should provide their own extinguishers, especially for activities that require them in the direct vicinity of their work.

3.14.3 Extinguishers shall be checked monthly for usage and service condition, and shall be in good operating conditions at all times. Owner extinguishers should only be used in an emergency. Messer representatives shall be notified if an individual discharges an extinguisher other than their own.

3.14.4 Equipment and materials shall be stored so as not to block access to fire control and emergency equipment such as fire hydrants, extinguishers, hose racks, alarm boxes, safety showers, self-contained breathing apparatus, etc. A minimum of 15 feet of clearance shall be maintained around fire hydrants.

3.14.5 Likewise, materials and equipment shall not block or compromise the integrity of smoke/fire walls and doors. Messer representatives must approve any activity affecting the operation of these devices. The same is true when fire exits may be blocked.

3.14.6 Only approved containers shall be used for the storage, transport, and use of flammable substances. Portable containers used for transporting and transferring gasoline or other flammable liquids shall be approved (metal) safety cans equipped with flash arrestors and self-closing lids. All such containers shall be clearly labeled as to its contents. When transferring flammable liquids from one container to another, a bonding wire shall connect the containers.

3.14.7 Secondary containment is required for all above ground fuel storage tanks. Double wall storage tanks are also acceptable. In addition, such tanks must be protected from collision damage. Drip pan must be used to prevent any spillage from the dispense nozzle.

3.14.8 Areas around welding or flame cutting operations shall be kept free of flammable or combustible materials. Welding, cutting, or any ignition source is not permitted within 50 feet of any refueling, spray painting, or storage of flammable liquids.

3.14.9 For mixing and spray application of flammable and combustible materials, only equipment which is approved for that specific use shall be employed.

3.14.10 Adequate ventilation to prevent an accumulation of flammable vapors shall be provided where solvents or volatile cleaning agents are used. Extra precaution is needed when solvents are used in the presence of hot surfaces, or where high heat and ultra-violet rays from welding may present an additional hazard from toxic vapors.

3.14.11 Fuel fired heating devices shall not be used in confined or unventilated spaces.

3.14.12 Open flame heating sources shall not be used in areas where combustibles are stored.

3.14.13 No more than 25 gallons of flammable or combustible liquid shall be stored in a room outside of an approved storage cabinet. A maximum of 60 gallons of flammable liquid or 120 gallons of combustible liquid shall be stored in a storage cabinet. Quantities in excess shall be stored in a storage room.

3.14.14 Warning signs shall be posted where flammable or combustible materials (solid, liquid, and gas) are stored. “No Smoking” signs shall be posted in areas of possible fire hazards. Contractors/suppliers shall abide by no smoking policies required on specific sites.

3.14.15 Liquid Petroleum Gas shall never be stored in a building.

3.14.16 An individual designated as a “fire watch” shall be provided by the contractor/supplier when required for hot work activities and shall be trained in the proper operation of fire extinguishers and understand general “fire” protocol.

3.14.17 It is the responsibility of each individual to become familiar with the location of the exits that could be used in case of a fire or other evacuation emergencies.

3.14.18 Hot Work Permits maybe required as per jobsite specific rules. Work activities which produce: spark, slag or open flame may be required to have a Hot Work Permit.

3.15 Demolition

3.15.1 Prior to permitting employees to start demolition operations, an engineering survey shall be made, by a competent person, of the structure to determine the condition of the framing, floors, and walls, and possibility of unplanned collapse of any portion of the structure. Any adjacent structure where employees may be exposed shall also be similarly checked. Employer shall document the survey.

3.15.2 When employees are required to work within a structure to be demolished which has been damaged by fire, flood, explosion, or other cause, the walls or floor shall be shored or braced as directed by a PE.

3.15.3 No material shall be dropped to any point lying outside the exterior walls of the structure unless the area is effectively protected. Whenever materials are dropped more than 20 feet to any point lying outside the exterior walls of the building, an enclosed chute shall be used.

3.15.4 When debris is dropped through holes in the floor without the use of chutes, the area onto which the material is dropped shall be completely enclosed with barricades not less than 42 inches high and not less than 6 feet back from the projected edge of the opening above. Signs, warning of the hazard of falling materials, shall be posted at each level. Removal shall not be permitted in this lower area until debris handling ceases above.

3.15.5 All material chutes, or sections thereof, at any angle of more than 45 degrees from the horizontal, shall be entirely enclosed, except for openings equipped with closures at or about floor level for the insertion of materials. The openings shall not exceed 48 inches in height measured along the wall of the chute. At all stories below the top floor, such openings shall be kept closed when not in use.

3.16 Use of Vehicles

3.16.1 Access to the jobsite shall be according to local regulations. Adequate traffic control signs shall be enforced. Access roadways shall be clearly marked, and shall be used.

3.16.2 Contractor/supplier vehicles shall be kept in safe operating condition, and contractor/supplier personnel shall comply with local and site regulations regarding the operation of such vehicles.

3.16.3 Contractors/suppliers shall not use or operate Messer vehicles, mobile equipment, or employee vehicles without the specific authorization from the Messer representative.

3.16.4 Contractor/supplier employees shall park in designated areas. They shall not park on roadways or service drives, or near doorways, loading bays, dumpster boxes, or access to fire hydrants or hoses. Contractor/supplier personnel shall always check carefully before backing up.

3.16.5 Fuel tanks on vehicles shall not be filled while the engine is running. The driver shall stay with the vehicle. Smoking is prohibited during refueling.

3.16.6 Vehicle accidents on Messer jobsites shall be reported to the Messer representative immediately.

3.16.7 All cargo shall be secured. Material hanging over the sides or ends of a truck shall be flagged.

3.16.8 Transporting employees on equipment not designed for that specific purpose is prohibited. This includes riding while hanging onto the exterior of a vehicle or mobile equipment. Seatbelt use is mandatory for drivers/operators and passengers in all vehicles and equipment. No one is permitted to ride in the beds of trucks.

3.17 Construction Signage Use

3.17.1 Contractors shall install appropriate and effective warning and/or caution signs identifying hazards associated with work being completed.

3.17.2 Signs warning of high voltage shall be posted where unauthorized workers might come into contact with live parts such as overhead power lines and electrical closets.

3.17.3 Contractors shall ensure Caution-Overhead Work placards/signs are posted where other work activities are taking place near elevated work areas.

3.18 Concrete and Masonry

3.18.1 All protruding reinforcing steel, onto and into which employees could fall, shall be guarded to eliminate the hazard of impalement.

3.18.2 A limited access zone shall be established whenever a masonry wall is be constructed. The limited access zone shall conform to the following:

3.18.2.1 The limited access zone shall be established prior to the start of construction of the wall;

3.18.2.2 Be equal to the height of the wall to be constructed plus four feet, and shall run the entire length of the wall;

3.18.2.3 Be established on the side of the wall, which will not contain a scaffold;

3.18.2.4 Be restricted to entry by employees actively engaged in constructing the wall. No other employees shall be permitted to enter the zone;

3.18.2.5 Remain in place until the wall is adequately supported to prevent overturning and to prevent collapse.

3.18.3 All masonry walls over eight feet in height shall be adequately braced to prevent overturning and to prevent collapse. The bracing shall remain in place until permanent supporting elements of the structure are in place.

3.18.4 When overhand brick laying work is performed from scaffolding, the working side of the scaffold shall be protected from falls by guardrails or three courses of material with an effective height of no less than 24 inches above the work platform.

3.18.5 Dust control methods must be used when cutting, chipping, grinding, sand blasting or any other process involving concrete, block or brick. Wet methods must be used as first means of dust control. If not feasible, alternative methods must be in compliance with OSHA Repairable Crystalline Silica Standards.

3.18.6 Adequate eyewash facilities must be readily available for all employees working with uncured concrete, mortar, grout or acidic cleaning solutions.

3.18.7 Workers placing concrete from a chute, concrete bucket or hose shall wear adequate eye and face protection.

3.19 Dropped Object Prevention and Overhead Protection

3.19.1 Overhead risks and controls shall be identified for key scopes of work and addressed in the Subcontractor Site-Specific Safety Plan. Daily JSA's shall be used to identify area-specific risks and controls for each day's work activities. Controls identified on the daily JSA must be in accordance with minimum controls identified within the following requirements, Messer's risk assessment and site-specific safety plan and the subcontractor's approved site-specific safety plan.

3.19.1.1 Primary control measures shall be the preferred method of protection. Secondary control measures must be utilized where the primary control measures for dropped object prevention are not feasible or will not provide complete protection. Most overhead work activities will require a combination of primary and secondary controls.

a) Primary Control (Dropped Object Prevention) measures are focused on preventing an object from falling. These measures may include tool lanyards/tethers; rated tool bags with closure; guardrails with netting; sloped roof protection; material storage; and securement/tethering.

b) Secondary Control (Dropped Object Protection/Overhead Protection) measures are focused on preventing a dropped object from causing injury to persons or damage to property, but do not prevent an object from falling. These measures may include protective canopies; horizontal debris nets; and controlled access zones.

3.19.2 Mesh or netting is required on all perimeter guardrails installed at heights above 10' as well as on rail systems around elevator shafts, mechanical chases, stairwells or similar openings inside buildings where employees will perform work.

3.19.3 Sloped roofs shall have slide guards, debris netting or other means of primary dropped object prevention in place at all times when employees, tools or materials are present on the roof. If not feasible for the activity, an alternate plan for protection must be submitted and approved.

3.19.4 All buildings with exterior elevated work ongoing shall have designated, protected access/egress points from the building. This may be accomplished by walk through scaffolding, Connex boxes, canopy structures or other equivalent means. Additionally, measures must be put in place to restrict use of non-designated access/egress points. Emergency egress needs must be taken into consideration when planning.

3.19.4.1 Controlled access zones (CAZ) shall be established for all overhead work activities where there is potential for unauthorized individuals to enter the area below. Barricades should be sized such that a dropped object will not deflect and bounce beyond the barricade. If barricades cannot be sized to fully contain deflected objects, primary protection measures must be used in addition to controlled access zones. Additionally, primary protection measures must be used when authorized ground personnel are potentially exposed to overhead hazards in the barricaded area.

3.19.4.2 Danger or caution tape (including reinforced tapes) shall not be used for overhead protection CAZ. Only hard barricade material may be used (e.g., snow fence, cones and bones, jersey barriers). Flagged rope or chain may be utilized for short-term barricades.

3.19.5 Barricades must have signage or tags indicating the risk and ownership of the barricade.

3.19.6 Material storage and waste/debris containment and disposal shall be managed per Messer's 5S program to limit potential falling or wind-borne objects. No materials shall be stacked/stored higher than guardrail protection if stored adjacent to perimeter or shaft guardrails. Sheet goods (including plywood, metal decking, insulation board, etc.) and other loose materials stored on open decks or roofs shall be positively secured when not actively being used and at the end of each shift. Acceptable securement may include straps, banding, pallet wrap, etc.

3.19.7 Failure to implement these procedures or use required drop prevention systems/overhead protection will be considered a violation of Messer's Safety4Site program and will result in removal from the project site.

4.0 Health Requirements

4.1 Hazardous/Toxic Substances

4.1.1 The contractor/supplier shall develop and maintain a written Hazard Communication Program as required by 29 CFR 1926.59. The written program shall be submitted to the Messer representative prior to beginning work. Contractor/supplier employees and appropriate regulatory officials shall have access to the program. Contractor/supplier shall be responsible for ensuring that sub-tier contractors/suppliers have copies of their Hazard Communication programs on the jobsites.

4.1.2 The written program requirements include a current list of hazardous chemicals present at the site, a labeling system for containers of chemicals at the work site including dispensing/transfer containers, and corresponding Safety Data Sheets (SDS).

4.1.3 The contractor/supplier shall submit copies of all relevant SDSs to the Messer representative before the materials are brought on site.

4.1.4 Safety Data Sheets (SDS) shall be requested / obtained from the vendor for all hazardous chemicals or materials brought on site by the contractor. Container labels or warning systems for hazardous chemicals/materials shall include the name of the chemical/material the hazard is associated with, its use and exposure, and any necessary precautions.

4.1.5 Contact or exposure to hazardous chemicals/materials exceeding Permissible Exposure Levels (PEL) shall be avoided, preferably through the implementation of engineering or administrative controls. Where such controls are infeasible, appropriate personal protective equipment such as chemical resistant clothing, gloves, aprons, goggles and respirators shall be used. Unnecessary contact with any hazardous materials shall be avoided.

4.1.6 Messer representatives shall be notified immediately of a spill or release of a hazardous material. Messer representatives shall inform the owner of the occurrence.

4.1.7 Hazardous and/or toxic materials such as solvents, coatings, or thinners shall be stored in approved containers. Original shipping containers that satisfy local safety regulations are considered approved containers for transporting and storing these materials. All hazardous or toxic materials shall be returned to the designated storage area at the end of each shift. Hazardous, toxic or flammable materials shall not be stored in occupied buildings.

4.1.8 The contractor/supplier shall train its employees about the contractor's/ supplier's obligations under the law, and hazards and protective measures of chemicals to which they may be exposed. The contractor/supplier shall train its employees on the meaning of any labels, symbols, colors or other codes that might be used at the work site by the contractor, Messer employees, or other contractors/suppliers, to warn of particular worksite hazards. All such training shall be documented and retained by the contractor/supplier, with a copy provided to the Messer representative upon request.

4.1.9 Contractors/suppliers engaged in renovation or demolition projects shall ensure employees are trained in the potential environmental health hazards of such work. This includes a minimum of awareness level training in asbestos, lead and mold. Training shall be documented and available to Messer upon request.

4.1.10 Contractors/suppliers whose work creates excessive dust or fumes shall provide adequate engineering controls such as an exhaust or ventilation system, and/or conduct work at "off hours", as approved by the Messer representative. Exhaust and/or ventilation systems must be reviewed with the Messer representative prior to implementation.

4.1.11 All equipment with combustion engines used indoors shall be fueled with LP gas, exhausted to the exterior, or be fitted with oxy-cat mufflers. The areas shall also be monitored for carbon monoxide.

4.2 Respiratory Protection

4.2.1 The contractor/supplier shall protect personnel and the public from exposures to dust, fumes, vapors, mists or gases in excess of Permissible Exposure Limits (PEL) or Short Term Exposure Limits (STEL), as referenced by the Occupational Safety and Health Administration (OSHA), American Conference of Governmental and Industrial Hygienist (ACGIH).

4.2.2 Where exposure is unavoidable, and engineering or administrative controls such as isolation of the hazardous materials, ventilation or limiting exposure periods may not provide adequate protection, use of approved respirators shall be required.

4.2.3 Personnel shall wear appropriate respiratory protection when applying toxic or hazardous materials inside tanks, rooms, or other areas where adequate ventilation does not exist.

4.2.4 Personnel required to wear respiratory protection shall be trained, fit tested, and medically qualified to wear such devices. Documentation shall be made available upon request. Contractors/suppliers shall ensure that sub-tier contractors/suppliers have this information available for review.

4.2.5 The contractor/supplier shall implement a respiratory program, which includes proper maintenance and care of the respirators and any related equipment.

4.3 Medical Surveillance

4.3.1 Individuals, depending upon the type of work and qualifications, may be required to be medically qualified prior to doing certain types of work, or where exposure to certain hazardous materials exists.

4.3.2 The contractor/supplier shall provide post exposure surveillance when deemed necessary.

4.4 Hearing Conservation and Noise Control

4.4.1 Hearing protection is required in all posted high noise level areas of Messer projects. Hearing protection may also be required where excess noise exposure exists even on a temporary basis. This would include situations where equipment such as jackhammers, saws, drills, grinders, or heavy equipment is being utilized, and the 90-decibel level is exceeded. The contractor shall implement the necessary hearing protection to respond to these noise hazards.

4.4.2 Areas where noise levels exceed the 90-decibel standard on a routine shall require adequate hearing protection, and this requirement shall be effectively communicated to those affected. Employees shall also wear adequate PPE when working in areas where noise levels exceed the 90-decibel standard on a temporary and/or intermittent basis. This protection could include muffs, plugs, or a combination thereof. Individuals required to wear such hearing protection shall be properly fitted and trained.

4.4.3 Where routine exposure to noise in excess of the 85 TWA (Time Weighted Average, 8-hour Workday) decibel level occurs, the contractor personnel are subject to the provisions of the OSHA Hearing Conservation Standard. This includes audiometric testing, employee training and any other applicable requirements.

4.5 Asbestos Containing Materials

4.5.1 If asbestos is suspected or materials containing asbestos are discovered on site, Messer representatives shall be notified immediately. All work in and around the suspected materials shall cease until a determination is made by a qualified third party, and any necessary abatement is completed.

4.5.2 Individuals involved with the handling, removal, demolition, and/or disposal of materials containing asbestos shall comply with OSHA, EPA, and other state and/or local standards governing this activity.

4.5.3 The OSHA Asbestos Standard requires that personnel working with asbestos shall be properly trained, monitored for exposure, and medically surveyed where necessary. Engineering controls and personal protective equipment shall be utilized to prevent exposures in excess of the Permissible Exposure Limit (PEL).

4.5.4 Individuals shall comply with Environmental Protection Agency (EPA) removal requirements for asbestos including: written notification prior to removal, utilization of emission controls, and special handling and disposal procedures.

4.5.5 All individuals hired to perform asbestos abatement work shall be properly bonded, insured, and licensed by the appropriate governing agencies.

4.5.6 All individuals hired to perform lead abatement shall be properly bonded, licensed, and insured, as required by the appropriate governing agencies.

4.5.7 The employer handling abatement work shall confirm or deny materials contaminated with asbestos through the necessary documented testing/surveying resources. This testing may be conducted through an established third party testing agency.

4.6 Lead Containing Materials

4.6.1 If lead is suspected or materials containing lead are discovered on site, Messer representatives shall be notified immediately. All work in and around the suspected materials shall cease until a determination is made by a qualified third party and any necessary actions take place.

4.6.2 All individuals hired to perform lead abatement and/or disturbing lead-containing surfaces shall be properly bonded, licensed, and insured, as required by the appropriate governing agencies.

4.6.3 Individuals involved with the handling, removal, demolition, and/or disposal of materials containing lead shall comply with, EPA, and other state and/or local standards governing this activity. Individuals shall specifically comply with the OSHA Construction Standard, 1926.62.

4.6.4 Unless sampling results verify zero concentrations of lead, all existing painted surfaces that will be disturbed shall be assumed to be lead-containing.

4.6.5 An exposure assessment/air monitoring shall be conducted to determine the anticipated exposure levels of individuals disturbing the lead-containing surfaces, and the type of protection needed when doing such.

4.6.6 All employees performing this type of work shall be trained on the hazards of lead exposure, participate in a medical surveillance program, when necessary and shall be trained on and shall use the appropriate protective equipment.

4.7 Silica

4.7.1 Any contractor/suppliers performing potential silica-related work shall submit a written silica exposure control plan prior to beginning work and must identify a competent person for the project. The silica exposure control plan shall include task-specific controls that are in compliance with OSHA Table 1 or documentation of appropriate protection must be provided for alternate controls.

4.7.2 Contractor/suppliers shall identify a competent person for the project and shall ensure workers are trained on operations that could result in exposure to silica and proper control measures in compliance with the OSHA standard.

4.7.3 Dry sweeping without dust compounds and use of compressed air for cleaning of silica containing dust is strictly prohibited. Dust containing silica shall be wet swept, swept using appropriate sweeping compound or vacuumed using an approved HEPA vacuum and filter.

4.8 Industrial Hygiene and Exposure Standards

4.8.1 The contractor/supplier shall be responsible for determining potential job-related health risk exposures as well as the applicable Permissible Exposure Level (PEL) or standard.

4.8.2 Where the potential exists for employee exposure to occupational health risk(s) at the jobsite, the contractor/supplier shall identify and evaluate those risk(s) relevant to its work activity, through various means including medical surveillance, monitoring of health complaints, incident reports and workers' compensation claims, and industrial hygiene sampling and personnel exposure monitoring methods.

4.8.3 For industrial hygiene sampling/exposure monitoring, the contractor/supplier shall be responsible for providing the necessary equipment and expertise to do the work. Samples/monitoring results shall be sent to a NIOSH-approved laboratory for evaluation. Results from sampling/monitoring shall be communicated to affected employees with a written record submitted to the Messer representative upon request.

4.9 Moisture Intrusion and Mold

4.9.1 While mold may not be completely eliminated during construction activities, Messer requires the following steps to be taken to control mold and minimize any adverse effects:

4.9.2 Notify the Messer management team immediately following a water intrusion or the identification of mold;

4.9.3 Dry water-damaged areas and materials as soon as possible, within 24 hours and not later than 48 hours after the water intrusion event;

4.9.4 Replace porous materials as they cannot be cleaned effectively. Clean non-porous surfaces with detergent and water, and dry them completely.

4.9.5 Contractors can often clean a small outbreak of mold. However, if mold growth is extensive, consult a professional with experience. When using disinfectants or biocides, always ventilate the area, using outside air if possible, and exhaust the air to the outdoors. During cleanup employees shall wear long-sleeve shirts and pants that can be washed or discarded after the work. Gloves and eye protection shall be worn as well. And when using cleaning materials such as biocides or disinfectants, follow the manufacturer's directions and wear recommended personal protective equipment, which may include respiratory protection.

4.10 Hexavalent Chromium

4.10.1 The contractor is required to meet all applicable requirements under section 1926.1126 and/or Appendix C-1: Portland Cement Inspection Procedures. Implementation will include but not limited to air sampling, employee training, medical surveillance, protective equipment, and suitable hand washing facilities.

5.0 Environmental Requirements

5.1 Protection of the Environment

5.1.1 The contractor/supplier shall be knowledgeable of and comply with all federal, state, and local environmental regulations for materials, including hazardous substances or wastes, under its control. The contractor/supplier shall not dump, release, or otherwise discharge or dispose of any such materials without the express authorization of the Messer representative.

5.1.2 Any release of a hazardous substance to the environment, whether into the air, water, or ground, must be reported to the Messer representative immediately.

5.1.3 If a release resulting from contractor actions occur, the contractor/supplier shall take proper measures to counter any known environmental or health hazards associated with such a release. These would include remedial procedures such as spill control, containment, and disposal. Documentation of proper disposal shall be provided to Messer. The contractor/supplier shall also provide notification to the proper authorities.

5.2 Air Pollution

5.2.1 The contractor/supplier, depending on the type and quantity of materials, may be required to have an emergency response plan for any releases of materials to the atmosphere. The contractor/supplier shall also be aware of local ordinances affecting air pollution.

5.3 Water Pollution

5.3.1 Where materials under contractor/supplier control could be discharged to the ground or to the water, the contractor/supplier shall be aware of and comply with local sewer ordinances or other requirements, which may prohibit the discharge of certain materials into the sewer system.

5.3.2 The contractor/supplier shall obtain any necessary permits for materials under its control. These permits include, but are not limited to, National Pollutant Discharge Elimination System (NPDES) permits, Public Owned Treatment Works (POTW) contracts, Storm Water Control Permits, and Spill Prevention Control and Countermeasure (SPCC) plans, as well as any local or regional requirements relating to such.

SECTION 008270
Responsible Bidder Requirements

PART I - GENERAL

Contractors shall be required to satisfy all of the following pre-award responsibilities and agree to all of the following provisions which will be incorporated in the contracts for construction projects within Paycor Stadium. The Board of County Commissioners of Hamilton County, Ohio (the"County") believe that these requirements are reasonably related to the successful performance of Paycor Stadium projects. These requirements shall also be set forth and integrated with the Bid Package Conditions.

1. Each bidder shall certify that it will require all contractors who bid or perform any work pursuant to the contract on which the bidder is bidding to satisfy all of these Responsible Bidder Requirements.

2. Each bidder shall certify that it will pay prevailing wages, in amounts determined according to Ohio's Prevailing Wage Law, R.C. 4115.03 through 4115.16, and O.A.C. 4101:9-4-01 through 4101:9-4-31, on all construction projects that are part of Paycor Stadium, except as otherwise provided herein. Notwithstanding the foregoing provision, the payment of prevailing wages shall not be required with respect to leasehold and/or tenant improvements and/or the fit out of interior spaces of the office, retail and condominium elements.

3. As a condition precedent to the award of a contract or subcontract of Two Hundred and Fifty Thousand Dollars ($250,000) or more, Hamilton County may require the lowest bidder to engage in a review of the constructibility and scope of the bid to verify that the contractor included all required work.

4. If the bid of the lowest bidder is more than twenty percent (20%) below the bid of the next lowest bidder, Hamilton County may request that the lowest bidder identify three (3) construction projects that it has successfully completed within the five (5) years before the submission of the bid. This information may be provided in the post-bid scope review to Hamilton County.

5. Each bidder shall certify that it will employ supervisory personnel on the project that (a) are qualified to perform in such supervisory capacity and (b) have any license or licenses required by applicable law to perform in such capacity.

6. Each bidder shall certify that it is not currently debarred from performing state or federal construction contracts (after all appeals), because of a violation of Fair Labor Standards Act and/or any state or federal prevailing wage law. Each bidder shall provide a list of every occasion on which it has been debarred from performing local, state or federal construction contracts (after all appeals), because of a violation of the Fair Labor Standards Act and/or any state of federal prevailing wage law, during the last ten years.

7. Each bidder shall certify that it, as well as each subcontractor it will utilize on the Project has implemented an OSHA-compliant Safety Program which includes: a) with respect to all supervisors, completion of OSHA's thirty (30) hour safety course; b) with respect to all field employees, completion of OSHA's ten (10) hour safety program. Each bidder shall provide evidence of implementation of an OSHA compliant safety program as set forth herein.

8. Each bidder shall certify that it has implemented a substance-abuse policy and that it is in compliance with Ohio's Drug Free Workplace Requirements; bidders will provide evidence of implementation of such policies upon written request of Hamilton County.

9. Each bidder shall certify that it has all licenses required by applicable state law and regulation to perform work required herein.

10. Each bidder shall list any professional license or licenses that have been revoked by Ohio or revoked by any other state within five (5) years prior to the date of the contractor's bid.

11. Each bidder shall certify that it has no final judgments against it which are not secured by payment bond or other surety at the time of award which are equal to or exceed fifty percent (50%) of the contractor's net work.

12. Each bidder shall certify that it has complied with applicable unemployment and workers compensation laws for at least two (2) years preceding the date of bid submittal.

13. Each bidder shall certify that with respect to each a prime trade contract (e.g., plumbing, HVAC, electrical and fire safety) it will not subcontract more than seventy-five percent (75%) of the bid amount for that prime trade contract. A bidder may apply for a waiver of the foregoing requirement by Hamilton County, which waiver shall be subject to the review and approval of Hamilton County.

14. Each bidder shall certify that it does not have an Experience Modification Rating of more that 1.3 (a penalty rated employer) with respect to the Ohio Bureau of Workers' Compensation risk assessment rating.

15. Each bidder shall certify that it will have in place a meaningful Health Care Medical Plan, and provide, as part of its responsibility review, evidence of a Health Care Medical Plan list of eligible employees and the bidder's share of the cost for those employees working on the Hamilton County Project. Notwithstanding the foregoing, a bidder with gross revenues of two million dollars ($2.0M) or less in any of the preceding three years shall be exempted from providing a Health Care Medical Plan as set forth herein. However, any such bidder exempted from this requirement shall certify that it will comply with the applicable prevailing wage requirements with respect to medical insurance.

16. Each bidder shall certify that it will have a meaningful pension or retirement program for its employees and provide, as part of its responsibility review, evidence that it contributes, on a regular basis to an employee pension or retirement program for its field employees and the list of employees for the employees with such coverage. Notwithstanding the foregoing, a bidder with gross revenues of two million dollars ($2.0M) or less in any of the preceding three years shall be exempted from providing a pension or retirement program as set forth herein. However, a bidder exempted from this requirement shall certify that it will comply with the applicable prevailing wage requirements with respect to a pension or retirement program.

17. Each bidder shall certify that it shall employ field employees on this project that will meet at least one of the following criteria:

a. Completion of a state or federally approved apprenticeship program in the skilled trade craft such employee is performing a journeyman; or
b. Worked as a skilled trade person for at lest three (3) years in the craft; or
c. Currently enrolled in a state or federally approved apprenticeship program for the craft; or
d. Completed the Employee Readiness Program.

A bidder may request a waiver from Hamilton County of the foregoing requirements with respect to a field employee or a particular position. In requesting such waiver, a bidder shall be required to provide documentation of the skills and experience of such employee or the applicable position which form the basis for such request. Any waiver or the foregoing requirements shall be subject to the review and approval of Hamilton County.

18. Each bidder shall certify that it is not debarred from bidding on the construction project contract in question.

19. A bidder's falsification of any of the certifications herein or failure to comply with the requirements set forth herein, shall be the basis for a default termination of the contract.

PART 1 PRODUCTS

Not used.

PART 2 EXECUTION

Not used.

END OF SECTION

SECTION 009000
CONTRACT CONSTRUCTION MANAGEMENT FORMS

PART 1 GENERAL

1.1 SUMMARY

A. The following documents, referred to in the General Conditions, are available from the Construction Manager upon request:
1. Change Order Form (AIA G701 - 2001 – as amended & modified)
2. Application and Certificate for Payment (AIA G702 - 1992 – as amended & modified)
3. Continuation Sheet (AIA G703-1992 – as amended & modified)
4. Certificate of Substantial Completion (AIA G704 - 2000 – as amended & modified)
5. Contractor's Affidavit of Payment of Debts and Claims (AIA G706 - 1994 – as amended & modified)
6. Contractor's Affidavit of Release of Liens (AIA G706A - 1994 – as amended & modified)
7. Consent of Surety to Final Payment (AIA G707 – 1994 – as amended & modified)
8. Contractor's Affidavit
.
9. Construction Change Directive Form (AIA G714/CMa – 1992 as amended & modified)
10. Substitution Form (§ 3.3 of the Instructions to Bidders A701)

PART 2 PRODUCTS

Not Used

PART 3 EXECUTION

Not Used

END OF SECTION

AIA® Document G701™ – 2017

Change Order

PROJECT: *(Name and address)*
Paycor Stadium South Scoreboard
Facade BP#5 Package
ITB#078-26

CONTRACT INFORMATION:
Contract For: General Construction

Date:

CHANGE ORDER INFORMATION:
Change Order Number:

Date:

OWNER: *(Name and address)* Board of County Commissioners of Hamilton County, Ohio
138 E. Court Street, Room 603
Cincinnati, Ohio 45202

ARCHITECT: *(Name and address)*

CONTRACTOR: *(Name and address)*

THE CONTRACT IS CHANGED AS FOLLOWS:
(Insert a detailed description of the change and, if applicable, attach or reference specific exhibits. Also include agreed upon adjustments attributable to executed Construction Change Directives.)

The original Contract Sum was	$	0.00
The net change by previously authorized Change Orders	$	0.00
The Contract Sum prior to this Change Order was	$	0.00
The Contract Sum will be increased by this Change Order in the amount of	$	0.00
The new Contract Sum including this Change Order will be	$	0.00

The Contract Time will be increased by Zero (0) days.
The new date of Substantial Completion will be

NOTE: This Change Order does not include adjustments to the Contract Sum or Guaranteed Maximum Price, or the Contract Time, that have been authorized by Construction Change Directive until the cost and time have been agreed upon by both the Owner and Contractor, in which case a Change Order is executed to supersede the Construction Change Directive.

NOT VALID UNTIL SIGNED BY THE ARCHITECT, CONTRACTOR AND OWNER.

ARCHITECT *(Firm name)*	**CONTRACTOR** *(Firm name)*	**OWNER** *(Firm name)*
SIGNATURE	**SIGNATURE**	**SIGNATURE**
PRINTED NAME AND TITLE	**PRINTED NAME AND TITLE**	**PRINTED NAME AND TITLE**
DATE	**DATE**	**DATE**

AIA Document G701™ – 2017. Copyright © 1979, 1987, 2000 , 2001 and 2017 by The American Institute of Architects. All rights reserved. The "American Institute of Architects," "AIA," the AIA Logo, and "AIA Contract Documents" are registered trademarks and may not be used without permission. This document was produced by AIA software at 14:07:54 ET on 11/16/2021 under Order No.6496374946 which expires on 04/23/2022, is not for resale, is licensed for one-time use only, and may only be used in accordance with the AIA Contract Documents® Terms of Service. To report copyright violations, e-mail copyright@aia.org.
User Notes: (3B9ADA5E)

AIA® Document G702® – 1992

Application and Certificate for Payment

TO OWNER: Board of County Commissioners of Hamilton County, Ohio
138 E. Court Street, Room 603
Cincinnati, Ohio 45202

PROJECT: Paycor Stadium South Scoreboard Facade BP#5 Package
ITB#078-26

APPLICATION NO:
PERIOD TO:
CONTRACT FOR: General Construction
CONTRACT DATE:
PROJECT NOS: / Board of County Commissioners of Hamilton County, /

Distribution to:
OWNER: ☐
ARCHITECT: ☐
CONTRACTOR: ☐
FIELD: ☐
OTHER: ☐

FROM CONTRACTOR:

VIA ARCHITECT:

CONTRACTOR'S APPLICATION FOR PAYMENT

Application is made for payment, as shown below, in connection with the Contract.
AIA Document G703®, Continuation Sheet, is attached.

1. ORIGINAL CONTRACT SUM		$0.00
2. NET CHANGE BY CHANGE ORDERS		$0.00
3. CONTRACT SUM TO DATE (Line 1 ± 2)		$0.00
4. TOTAL COMPLETED & STORED TO DATE (Column G on G703)		$0.00
5. RETAINAGE:		
a. 0 % of Completed Work (Column D + E on G703)	$0.00	
b. 0 % of Stored Material (Column F on G703)	$0.00	
Total Retainage (Lines 5a + 5b or Total in Column I of G703)		$0.00
6. TOTAL EARNED LESS RETAINAGE (Line 4 Less Line 5 Total)		$0.00
7. LESS PREVIOUS CERTIFICATES FOR PAYMENT (Line 6 from prior Certificate)		$0.00
8. CURRENT PAYMENT DUE		$0.00
9. BALANCE TO FINISH, INCLUDING RETAINAGE (Line 3 less Line 6)	$0.00	

CHANGE ORDER SUMMARY	ADDITIONS	DEDUCTIONS
Total changes approved in previous months by Owner	$0.00	$0.00
Total approved this Month	$0.00	$0.00
TOTALS	$0.00	$0.00
NET CHANGES by Change Order		$0.00

The undersigned Contractor certifies that to the best of the Contractor's knowledge, information and belief the Work covered by this Application for Payment has been completed in accordance with the Contract Documents, that all amounts have been paid by the Contractor for Work for which previous Certificates for Payment were issued and payments received from the Owner, and that current payment shown herein is now due.

CONTRACTOR:

By: _____ Date: _____

State of:

County of:

Subscribed and sworn to before me this day of

Notary Public:

My Commission expires:

ARCHITECT'S CERTIFICATE FOR PAYMENT

In accordance with the Contract Documents, based on on-site observations and the data comprising this application, the Architect certifies to the Owner that to the best of the Architect's knowledge, information and belief the Work has progressed as indicated, the quality of the Work is in accordance with the Contract Documents, and the Contractor is entitled to payment of the AMOUNT CERTIFIED.

AMOUNT CERTIFIED $0.00

(Attach explanation if amount certified differs from the amount applied. Initial all figures on this Application and on the Continuation Sheet that are changed to conform with the amount certified.)

ARCHITECT:

By: _____ Date: _____

This Certificate is not negotiable. The AMOUNT CERTIFIED is payable only to the Contractor named herein. Issuance, payment and acceptance of payment are without prejudice to any rights of the Owner or Contractor under this Contract.

AIA Document G702® – 1992. Copyright © 1953, 1963, 1965, 1971, 1978, 1983 and 1992 by The American Institute of Architects. All rights reserved. The "American Institute of Architects," "AIA," the AIA Logo, "G702," and "AIA Contract Documents" are registered trademarks and may not be used without permission. This document was produced by AIA software at 14:18:26 ET on 11/16/2021 under Order No.6496374946 which expires on 04/23/2022, is not for resale, is licensed for one-time use only, and may only be used in accordance with the AIA Contract Documents® Terms of Service. To report copyright violations, e-mail copyright@aia.org.
User Notes:

(3B9ADA6B)

AIA® Document G703® – 1992

Continuation Sheet

AIA Document G702®, Application and Certification for Payment, or G732™, Application and Certificate for Payment, Construction Manager as Adviser Edition, containing Contractor's signed certification is attached.
Use Column I on Contracts where variable retainage for line items may apply.

APPLICATION NO:
APPLICATION DATE:
PERIOD TO:
ARCHITECT'S PROJECT NO: THP Limited, Inc.

A	B	C	D	E	F	G		H	I
			WORK COMPLETED						
ITEM NO.	DESCRIPTION OF WORK	SCHEDULED VALUE	FROM PREVIOUS APPLICATION (D + E)	THIS PERIOD	MATERIALS PRESENTLY STORED (NOT IN D OR E)	TOTAL COMPLETED AND STORED TO DATE (D + E + F)	% (G÷C)	BALANCE TO FINISH (C - G)	RETAINAGE (IF VARIABLE RATE)
		0.00	0.00	0.00	0.00	0.00	0.00%	0.00	0.00
		0.00	0.00	0.00	0.00	0.00	0.00%	0.00	0.00
		0.00	0.00	0.00	0.00	0.00	0.00%	0.00	0.00
		0.00	0.00	0.00	0.00	0.00	0.00%	0.00	0.00
		0.00	0.00	0.00	0.00	0.00	0.00%	0.00	0.00
		0.00	0.00	0.00	0.00	0.00	0.00%	0.00	0.00
		0.00	0.00	0.00	0.00	0.00	0.00%	0.00	0.00
		0.00	0.00	0.00	0.00	0.00	0.00%	0.00	0.00
		0.00	0.00	0.00	0.00	0.00	0.00%	0.00	0.00
		0.00	0.00	0.00	0.00	0.00	0.00%	0.00	0.00
		0.00	0.00	0.00	0.00	0.00	0.00%	0.00	0.00
		0.00	0.00	0.00	0.00	0.00	0.00%	0.00	0.00
		0.00	0.00	0.00	0.00	0.00	0.00%	0.00	0.00
		0.00	0.00	0.00	0.00	0.00	0.00%	0.00	0.00
		0.00	0.00	0.00	0.00	0.00	0.00%	0.00	0.00
		0.00	0.00	0.00	0.00	0.00	0.00%	0.00	0.00
		0.00	0.00	0.00	0.00	0.00	0.00%	0.00	0.00
		0.00	0.00	0.00	0.00	0.00	0.00%	0.00	0.00
		0.00	0.00	0.00	0.00	0.00	0.00%	0.00	0.00
	GRAND TOTAL	**$0.00**	**$0.00**	**$0.00**	**$0.00**	**$0.00**	**0.00%**	**$0.00**	**$0.00**

AIA Document G703® – 1992. Copyright © 1963, 1965, 1966, 1967,1970, 1978, 1983 and 1992 by The American Institute of Architects. All rights reserved. The "American Institute of Architects," "AIA," the AIA Logo, "G703," and "AIA Contract Documents" are registered trademarks and may not be used without permission. This document was produced by AIA software at 14:09:52 ET on 11/16/2021 under Order No.6496374946 which expires on 04/23/2022, is not for resale, is licensed for one-time use only, and may only be used in accordance with the AIA Contract Documents® Terms of Service. To report copyright violations, e-mail copyright@aia.org.
User Notes:

(3B9ADAC8)

AIA® Document G706™ – 1994

Contractor's Affidavit of Payment of Debts and Claims

PROJECT: *(Name and address)*
Paycor Stadium South
Scoreboard Facade BP#5
Package
ITB#078-26

ARCHITECT'S PROJECT NUMBER:

OWNER: ☐
ARCHITECT: ☐
CONTRACTOR: ☐
SURETY: ☐
OTHER: ☐

CONTRACT FOR: General Construction
CONTRACT DATED:

TO OWNER: *(Name and address)*
Board of County Commissioners of
Hamilton County, Ohio
138 E. Court Street, Room 603
Cincinnati, Ohio 45202

STATE OF: Ohio
COUNTY OF: Hamilton

The undersigned hereby certifies that, except as listed below, payment has been made in full and all obligations have otherwise been satisfied for all materials and equipment furnished, for all work, labor, and services performed, and for all known indebtedness and claims against the Contractor for damages arising in any manner in connection with the performance of the Contract referenced above for which the Owner or Owner's property might in any way be held responsible or encumbered.

EXCEPTIONS:

SUPPORTING DOCUMENTS ATTACHED HERETO:

1. Consent of Surety to Final Payment. Whenever Surety is involved, Consent of Surety is required. AIA Document G707, Consent of Surety, may be used for this purpose

Indicate Attachment ☐ Yes ☒ No

The following supporting documents should be attached hereto if required by the Owner:

1. Contractor's Release or Waiver of Liens, conditional upon receipt of final payment.

2. Separate Releases or Waivers of Liens from Subcontractors and material and equipment suppliers, to the extent required by the Owner, accompanied by a list thereof.

3. Contractor's Affidavit of Release of Liens (AIA Document G706A).

CONTRACTOR: *(Name and address)*

BY: _____
(Signature of authorized representative)

_____
(Printed name and title)

Subscribed and sworn to before me on this date:

Notary Public:
My Commission Expires:

AIA Document G706™ – 1994. Copyright © 1970 and 1994 by The American Institute of Architects. All rights reserved. The "American Institute of Architects," "AIA," the AIA Logo, and "AIA Contract Documents" are registered trademarks and may not be used without permission. This document was produced by AIA software at 13:52:46 ET on 12/17/2021 under Order No.6496374946 which expires on 04/23/2022, is not for resale, is licensed for one-time use only, and may only be used in accordance with the AIA Contract Documents® Terms of Service. To report copyright violations, e-mail copyright@aia.org.
User Notes:
(3B9ADA6D)

AIA® Document G706A™ – 1994

Contractor's Affidavit of Release of Liens

PROJECT: *(Name and address)*
Paycor Stadium South
Scoreboard Facade BP#5
Package ITB#078-26

TO OWNER: *(Name and address)*
Board of County Commissioners of
Hamilton County, Ohio
138 E. Court Street, room 603
Cincinnati, Ohio 45202

ARCHITECT'S PROJECT NUMBER:

CONTRACT FOR: General Construction
CONTRACT DATED:

OWNER: ☐
ARCHITECT: ☐
CONTRACTOR: ☐
SURETY: ☐
OTHER: ☐

STATE OF:
COUNTY OF:

The undersigned hereby certifies that to the best of the undersigned's knowledge, information and belief, except as listed below, the Releases or Waivers of Lien attached hereto include the Contractor, all Subcontractors, all suppliers of materials and equipment, and all performers of Work, labor or services who have or may have liens or encumbrances or the right to assert liens or encumbrances against any property of the Owner arising in any manner out of the performance of the Contract referenced above.

EXCEPTIONS:

SUPPORTING DOCUMENTS ATTACHED HERETO:

1. Contractor's Release or Waiver of Liens, conditional upon receipt of final payment.

2. Separate Releases or Waivers of Liens from Subcontractors and material and equipment suppliers, to the extent required by the Owner, accompanied by a list thereof.

CONTRACTOR: *(Name and address)*

BY: _____
(Signature of authorized representative)

_____
(Printed name and title)

Subscribed and sworn to before me on this date:

Notary Public:
My Commission Expires:

AIA Document G706A™ – 1994. Copyright © 1982 and 1994 by The American Institute of Architects. All rights reserved. The "American Institute of Architects," "AIA," the AIA Logo, and "AIA Contract Documents" are registered trademarks and may not be used without permission. This document was produced by AIA software at 13:50:47 ET on 12/17/2021 under Order No.6496374946 which expires on 04/23/2022, is not for resale, is licensed for one-time use only, and may only be used in accordance with the AIA Contract Documents® Terms of Service. To report copyright violations, e-mail copyright@aia.org.
User Notes: (3B9ADA7D)

AIA® Document G707™ – 1994

Consent Of Surety to Final Payment

PROJECT: *(Name and address)*

Paycor Stadium South Scoreboard Facade BP#5 Package

ITB#078-26

TO OWNER: *(Name and address)* Board of County Commissioners of Hamilton County, Ohio 138 E. Court Street, Room 603
Cincinnati, Ohio 45202

ARCHITECT'S PROJECT NUMBER:

CONTRACT FOR: General Construction

CONTRACT DATED:

OWNER: ☐
ARCHITECT: ☐
CONTRACTOR: ☐
SURETY: ☐
OTHER: ☐

In accordance with the provisions of the Contract between the Owner and the Contractor as indicated above, the
(Insert name and address of Surety)

, SURETY,

on bond of
(Insert name and address of Contractor)

, CONTRACTOR,

hereby approves of the final payment to the Contractor, and agrees that final payment to the Contractor shall not relieve the Surety of any of its obligations to
(Insert name and address of Owner)

, OWNER,

as set forth in said Surety's bond.

IN WITNESS WHEREOF, the Surety has hereunto set its hand on this date:
(Insert in writing the month followed by the numeric date and year.)

(Surety)

(Signature of authorized representative)

Attest:
(Seal):

(Printed name and title)

AIA Document G707™ – 1994. Copyright © 1982 and 1994 by The American Institute of Architects. All rights reserved. The "American Institute of Architects," "AIA," the AIA Logo, and "AIA Contract Documents" are registered trademarks and may not be used without permission. This document was produced by AIA software at 14:13:11 ET on 11/16/2021 under Order No.6496374946 which expires on 04/23/2022, is not for resale, is licensed for one-time use only, and may only be used in accordance with the AIA Contract Documents® Terms of Service. To report copyright violations, e-mail copyright@aia.org.
User Notes: (3B9ADA67)

CONTRACTOR'S AFFIDAVIT

State of Ohio,
County of_____, Ohio_____, 202___
_____, being first duly sworn, says that he/she is [1]_____
Of[1]_____, the (Sub Original) contractor having a contract with
_____, the[2] _____
For[4]_____, a _____
situated on or around or in front of the following described property, in_____County, Ohio____: _____
_____
_____

whereof _____ was the owner, part owner or lessee.

SUB-CONTRACTORS

Affiant further says that the following shows the names and addresses of every sub-contractor in the employ of said[2] _____giving the amount, if any, which is due, or to become due, to them, or any of them, for work done, or machinery, material or fuel furnished to date hereof, under said contracts.

NOTE – This statement must be accompanied by a similar sworn statement signed by each of the sub-contractors listed below:

NAME	ADDRESS	TRADE	Amount Due or to Become Due for Work and Materials to Date Hereof	

MATERIAL MEN

Said affiant further says that the following shows the names and addresses of every person furnishing machinery, material or fuel to[2]_____giving the amount, if any, which is due, or to become due, to them, or any of them, for machinery, material or fuel furnished to date hereof, under said contracts.

NAME	ADDRESS	Kinds of Machinery, Material or Fuel	Amount Due or to Become Due for Material Furnished to Date Hereof	

NOTE – The above must be accompanied by "Certificate of Materialman." In lieu of such certificate, there may be furnished a written waiver of lien, a written release or receipt.

LABOR

Said affiant further says that the following shows the names and addresses of every unpaid laborer in the employ of[2] _____furnishing labor under said contract, giving the amount, if any, which is due, or to become due, for labor done to date hereof.

NOTE – If the fact is that every laborer has been paid in full, then recite: "Every laborer has been paid in full." If not, then give each unpaid laborer's name and address and the amount due or to become due.

NAME	ADDRESS	HOURS	Amount Due or to Become Due for Labor Furnished to Date Hereof	

Affiant further states that there is due or to become due _____ for work performed or machinery, material or fuel furnished to _____ to date hereof under said contracts, the sum of $ _____.

That the amounts due or to become due to said sub-contractors, material men and laborers, for work done or machinery, material or fuel furnished to date hereof, to[2]_____are fully and correctly set forth opposite their names, respectively, in the aforesaid statements, and further evidenced by certificates of every person furnishing machinery, material or fuel, hereto attached, and made a part hereof.

Affiant further says that[6] _____ has not employed or purchased or procured machinery, materials or fuel from, or sub-contracted with any person, form or corporation, other than those above mentioned, and owes for no labor performed, or machinery, material or fuel furnished, under said contracts, other than above set forth.

_____

SWORN TO BEFORE ME AND SUBSCRIBED IN MY PRESENCE, at _____, Ohio, this _____ day of _____, 202_.

_____
NOTARY PUBLIC

1. Sec'y., Treas., one of firm, or agent, as case may be.

2. Name and address.
3. "Owner," "part-owner," "lessee," or "authorized agent of owner, part-owner or lessee," or "original" or "principal contractor under a contract with _____ _the owner, part-owner or lessee,: as the case may be.

4. "Constructing, altering or repairing a boat, vessel or watercraft,: or "erecting, altering, repairing or removing a house, mill, manufactory, or any other furnace or furnace material therein, or other building appurtenance, fixture, bridge or other structure," or "digging, drilling, boring, operating, completing and repairing of any gas well, oil well or other well," or "altering, repairing or constructing any oil derrick, oil tank, oil or gas pipe line," or "furnishing tile for the drainage of any lot or land."
5. Accurate description of the property.
6. Contractor or sub contractor executing affidavit.

AFIDAVIT OF ORIGINAL OR SUB-CONTRACTOR | OWNER | HEAD-CONTRACTOR | SUB-CONTRACTOR | DATE:_____

AIA® Document G714™ – 2017

Construction Change Directive

PROJECT: *(name and address)* Paycor Stadium South Scoreboard Facade BP#5 Package

ITB#078-26

OWNER: *(name and address)* Board of County Commissioners of Hamilton County, Ohio
138 E. Court Street, Room 603 Cincinnati, Ohio 45202

CONTRACT INFORMATION:
Contract For: General Construction

Date:

ARCHITECT: *(name and address)*

CCD INFORMATION:
Directive Number: 001

Date:

CONTRACTOR: *(name and address)*

The Contractor is hereby directed to make the following change(s) in this Contract:
(Insert a detailed description of the change and, if applicable, attach or reference specific exhibits.)

PROPOSED ADJUSTMENTS

1. The proposed basis of adjustment to the Contract Sum or Guaranteed Maximum Price is:
   - ☒ Lump Sum decrease of $0.00
   - ☐ Unit Price of $ per
   - ☐ Cost, as defined below, plus the following fee:
     (Insert a definition of, or method for determining, cost)
   - ☐ As follows:

2. The Contract Time is proposed to remain unchanged. The proposed adjustment, if any, is (0 days).

NOTE: The Owner, Architect and Contractor should execute a Change Order to supersede this Construction Change Directive to the extent they agree upon adjustments to the Contract Sum, Contract Time, or Guaranteed Maximum price for the change(s) described herein.

When signed by the Owner and Architect and received by the Contractor, this document becomes effective IMMEDIATELY as a Construction Change Directive (CCD), and the Contractor shall proceed with the change(s) described above.

Contractor signature indicates agreement with the proposed adjustments in Contract Sum and Contract Time set forth in this CCD.

ARCHITECT *(Firm name)*	OWNER *(Firm name)*	CONTRACTOR *(Firm name)*
SIGNATURE	SIGNATURE	SIGNATURE
PRINTED NAME AND TITLE	PRINTED NAME AND TITLE	PRINTED NAME AND TITLE
DATE	DATE	DATE

AIA Document G714™ – 2017. Copyright © 2001, 2007 and 2017 by The American Institute of Architects. All rights reserved. The "American Institute of Architects," "AIA," the AIA Logo, and "AIA Contract Documents" are registered trademarks and may not be used without permission. This document was produced by AIA software at 14:13:56 ET on 11/16/2021 under Order No.6496374946 which expires on 04/23/2022, is not for resale, is licensed for one-time use only, and may only be used in accordance with the AIA Contract Documents® Terms of Service. To report copyright violations, e-mail copyright@aia.org.
User Notes: (3B9ADA61)

SUBSTITUTION REQUEST FORM

The materials, products and equipment described in the Bidding documents establish a standard of required function, dimension, appearance, and quality to be met by the proposed substitution. Certain brands of material or apparatus may be specified. The Bid shall be based on these brands, which may be referred to in the Contract Documents as "Standards". The use of another brand (referred to as a substitution or proposed equal in the Contract Documents) may be requested as provided in the Instructions to Bidders. Substitutions, however, unless approved and issued in an Addendum will not be considered in determining the lowest and best bid.

The detailed procedures for submitting substitution requests before or with submittal of the Bid are set forth in **§ 3.3** of the Instructions to Bidders. (*check one*)

☐ Bidder is not submitting any Substitutions for this Project or

☐ Bidder does hereby submit a Substitution request for the Project as follows:

The name of the material or equipment specified in the Bidding Documents:

_____

_____

The reason for the requested Substitution:

_____

_____

A complete description of the proposed Substitution including the name of the material or equipment proposed as the substitute, performance and test data, and relevant drawings:

_____

_____

_____

Any other information necessary or appropriate for evaluation. **Please attach to this Substitution Form submittals or cut sheets on proposed substitution**.

_____

_____

_____

Describe changes in other materials, equipment, or other portions of the Work, including changes in the work of other contracts or the impact on any project certifications (such as LEED), that will result from incorporation of the proposed substitution.

_____

_____

_____

SECTION 011100
SUMMARY OF WORK

PART 1 GENERAL

1.1 GENERAL PROVISIONS OF BID PACKAGE #4 TRADE CONTRACTS

The following summary is a description of work for all Contract Descriptions for the **Paycor Stadium South Scoreboard Facade**. Work related to the Project is as indicated on the Drawings and Specifications as prepared by KZF. This section describes and assigns work to each Trade Contract as designated by the Construction Manager. Each Trade Contractor shall cooperate and coordinate with all other Trade Contractors for proper and expedient completion of the work in this Project. Each Trade Contract Description identifies the major portions of Scope of Work to be performed by the Bidder in specific Contract Descriptions. This summary should in no way be construed as being all-inclusive. It is issued as a guide to aid in the assignment of work. Refer to the Drawings and Specifications for a detailed accounting of any work not explicitly specified or noted. Each Trade Contract Description lists specification sections included, in whole or in part, in that Trade Contract Description. All work activities not explicitly specified / noted but are required to complete the work included in a Trade Contract Description, are a part of the work scope.

PART 2 TRADE CONTRACT DESCRIPTIONS

2.1 SECTION INCLUDES:

A. List of Trade Contracts

B. General Provisions of **Bid Package #5** Trade Contracts

C. Contract Descriptions

2.2 LIST OF TRADE CONTRACTS

A. List of Bid Package #4 Trade Contracts:

TC11 Facade

2.B GENERAL PROVISIONS OF **BID PACKAGE #5** TRADE CONTRACTS

1. Each Trade Contractor shall be responsible for the proper protection of adjacent structures and public rights of way.

2. All work is to comply with the rules and regulations of governing authorities having jurisdiction. Work shall be performed by skilled tradesmen having experience in performing the work.

3. Storage of all materials is limited and must be approved by the Construction Manager. Offsite storage of material may be required. All costs associated with material delivery in small quantities, relocation of materials that impede work progress, and off-site material storage must be included in the bid.

4. A 48-HOUR NOTICE MUST BE GIVEN FOR DELIVERIES. IF NOTICE WAS NOT GIVEN DELIVERIES MAY BE TURNED AWAY. ALL COST ASSOCIATED WITH THIS ACTION WILL BE THE RESPONSIBILITY OF THE TRADE CONTRACTOR. ALL DELIVERIES MUST BE COORDINATED & APPROVED BY THE CONSTRUCTION MANAGER. NO PARKING BY EMPLOYEES OR DELIVERY VEHICLES IS PERMITTED ON SITE. STORAGE, TOOL OR OFFICE TRAILERS WILL NOT BE PERMITTED ON SITE WITHOUT THE PRIOR APPROVAL OF, AND IN COORDINATION WITH, THE CONSTRUCTION MANAGER.

5. Each Trade Contractor is responsible to review the site and be familiar with all existing conditions within and around the building including local conditions and requirements. The impact of the site conditions on the cost of performing the work shall be included in the bid. Trade Contractors shall notify the Construction Manager in writing of any discrepancies or conditions detrimental to proper performance of the Work.

6. Each Trade Contractor to provide to all other trades information and materials, shop drawings, diagrams, templates, and embedment's necessary for the coordination of the Work. It is each Trade Contractor's responsibility to coordinate all interface with other Trade Contractors.

7. Where new work connects with existing, do all necessary cutting and patching required to make a satisfactory connection with the work to be performed under the Contract Documents so as to leave the entire work in a finished and workmanlike condition. This requirement shall include all required work where new items connect, fit, or otherwise interface with existing surfaces. Provide all labor and materials to this end, whether or not shown or specified. Verify and match existing conditions. This shall include full block replacement to nearest construction expansion joint of any concrete pavement removed or damaged.

8. Each Trade Contractor shall always maintain a clean and safe passage to all areas of the site, and for the public around the site.

9. Field measuring the entire new structure may not be possible to meet the schedule. This Trade Contractor shall include tolerances in their design to account for normal discrepancies between structural steel shop drawings and erection.

10. Initial benchmarks and control lines will be provided by the Construction Manager. Each Trade Contractor is responsible for all detailed layout and grade from the indicated benchmark and control points.

11. Each Trade Contractor is to coordinate all work with the work of other trades for proper function and sequence to avoid construction delays or additional cost.

12. Each Trade Contractor is responsible for daily cleanup and disposal of all debris associated with its work activities. This shall include removal of debris from public property and/or roadways caused by work on site or carried outside of the site by vehicles employed by the Trade Contractor. Street cleaning of this debris is expected by each Trade Contractor, as necessary. Debris not removed by the Trade Contractors will be discarded at the delinquent Trade Contractor's expense. All areas of work are to be broom cleaned at the end of each workday. In addition to daily cleanup each Trade Contractor to provide 1 person for every 4 Trade Contractor employees and their subcontractors to a once-a-week job site general cleanup activity. Each Trade Contractor to provide its worker with all the necessary tools and equipment to do cleanup. There will be no tools or equipment provided by the Construction Manager. Coordination of the weekly cleanup will be the responsibility of the General Trades Contractor. Designated eating areas will be identified by the Construction Manager. These areas will be the only place for workers to eat and drink. Workers found violating this policy may be directed to leave the jobsite.

13. Each Trade Contractor shall be restricted to working hours of **7:00am to 4:00pm** unless alternate arrangements are approved by the Construction Manager. This does not alleviate the Trade Contractor's responsibility to work overtime as required to maintain the schedule.

14. Signs of any type are prohibited, except as specifically assigned by the Contract Documents.

15. Each Trade Contractor shall be responsible for the protection of its own materials, tools, and equipment, and finish work until substantial completion is granted. Damage to or theft of any materials, tools or equipment prior to substantial completion will be repaired or replaced at the Trade Contractor's expense.

16. Each Trade Contractor shall provide all temporary heat, utilities and protection required for the completion of all work as scheduled, except where specifically provided by others in the Contract Documents.

17. Each Trade Contractor shall have their superintendent attend all weekly Trade Contractor Meetings (time & location to be scheduled by Construction Manager).
18. The flow of traffic on City streets and public walkways must be maintained at all times. It shall be this Trade Contractor's responsibility to obtain all permits and provide all labor and material that are necessary for street and sidewalk lane closures. All work involved that impacts existing streets and/or sidewalks or impedes public access in any way shall be coordinated through the Construction Manager **prior to the date of the work.**

19. Each Trade Contractor shall secure all permits required by governing authorities for the completion of its own work scope. This includes all Electric, Plumbing, HVAC, Traffic or permits that are issued by the City's Department of Transportation and Engineering, street barricades and other special permits. No Permits will be secured by the Construction Manager other than the General Building permit

20. Each Trade Contractor shall submit daily reports and the weekly work plan twenty-four (24) hours before the weekly Trade Contractor meetings. Failure to submit these items each week for the prior week's work will result in rejection of this Trade Contractor's pay request.

21. Testing shall be performed in accordance with the Contract Documents. Where Owner and Trade Contractor testing are specified, the Trade Contractor shall provide complete testing. The Owner may provide additional testing at its discretion.

22. Each Trade Contractor is responsible for the complete review of, and coordination with, the Trade Contract Descriptions for other Trade Contractors. Where overlap occurs, include the cost of such work in your bid, and the Construction Manager will decide which Trade Contractor will perform this work. Appropriate credit will be deducted from the other Trade Contractor's Contract.

23. Each Trade Contractor must provide a full-time superintendent on site throughout the duration of their work on site. This superintendent shall be authorized to make all decisions relative to the work on site and shall be the primary contact for all correspondence. Part-time or token representatives who are not so authorized will not be permitted. Failure to comply with this requirement will result in rejection of this Trade Contractor's pay request. Any change of superintendent shall be pre-approved by the Construction Manager.

24. Time is of the essence on this project. Each Trade Contractor shall phase, construct and complete their work within the requirements included in Specification Section 01 32 16 and the subsequent development of and updating of the project schedule by the Construction Manager. Strict attention shall be paid to the bid schedule. These dates are critical and must be met by this subcontractor.

25. Each Trade Contractor shall complete the Resource Utilization and Inclusion Tracking Forms that are included in the Specifications or will be provided following award. The forms shall be completed on a monthly basis and submitted with the monthly pay request. Completed resource utilization forms must be submitted with the pay request in order for the pay request to be processed.

26. Each Trade Contractor will be required to attend several phasing meetings pertaining to Lean Construction. Trade Contractor shall have the appropriate personnel (more than one) attend the reverse phase scheduling meeting. Each Trade Contractor shall participate in the implementation of the Lean Construction process throughout the duration of the Project.

27. Safety hard hats, safety eye protection, High Vis, and Gloves shall be worn by all employees on this job site. This includes all of the Trade Contractor's Subcontractors and Suppliers.

28. All Trade Contractors shall use platform type ladders where ladders are necessary on this project. Other ladder types will not be allowed on site.

29. This Trade Contractor shall comply with all requirements of the Williams-Steiger Occupational Safety and Health Act of 1970 and subsequent amendments thereto. This Trade Contractor shall furnish to the Construction Manager a copy of its Safety Program, including a copy of its Hazardous Material Program, prior to the commencement of work on site. No payment will be made until these documents are received.

30. Any barricade or safety device removed by this Trade Contractor's employees shall be immediately re-erected by Trade Contractor. Upon failure to do so, the Construction Manager may direct the re-erection of it and the cost will be paid by the Trade Contractor.

31. All portions of existing site and all utilities not part of the Work which are damaged, moved or altered in any way during construction shall be replaced or repaired to the County’s satisfaction at the Trade Contractor’s expense.

32. Each Trade Contractor shall attend the Post Bid Interview. This interview will be scheduled by the Construction Manager. All trade contractors shall be notified in writing of the date the conference will be held.

33. Each Trade Contractor shall update their record / as-built drawings on a monthly basis, the updated as-built shall be submitted to the Construction Manager by the 20th of the month. If the Trade Contractors as-builts are not updated and submitted, the Trade Contractors pay request for that month will not be processed.

34. To facilitate the punch list process, each Trade Contractor must complete its punch list items within 3 business days (excluding weekends) of receipt (via fax, email, or distribution to the site leader) of each punch list item. Failure to complete the punch list will result in a back charge for the total cost, to have others complete the work as designated by the Construction Manager.

35. Trade Contractor to identify recycle and waste management opportunities when assessing their scope of work. These items will be reviewed at the Post Bid Interview Meeting.

36. The Construction Manager will be utilizing a web-based information management system to facilitate communications among project partners including but not limited to Owners, Architects, Engineers, Construction Manager, and Trade Contractors. The system being utilized is Autodesk document management software. All trade contractors must have an e-mail address and access to the internet.

Autodesk will be utilized for the following functions:

a. Project Contact Directory- this will be maintained by the Construction Manager
b. Requests for Information Management
c. Meeting Minutes Distribution
d. Posting of Official Notices and/or Communications
e. Submittal Management
f. Contract Document Management
g. Contract Drawings in PDF
h. Site Photographs
i. Punchlist Management
j. Field Work Order Management

The Construction Manager will issue usernames and passwords to each Trade Contractor and will provide training and technical assistants to the user groups. **Use of this system is mandatory**. There will be no costs passed on to the users for access to the system or license fees. Users will be responsible for the costs associated with access to the internet.

37. Each Trade Contractor to provide all labor, materials, tools, equipment, safety restraints, hoisting, rigging, fabrication, accessories, layout/control, warranties, services supervision, etc. required for a complete scope of work for this project.
38. Each Trade Contractor shall include all unloading, distribution, staging, hoisting, rigging, scaffolding, platforms, ladders, planking, guying, sheeting, shoring, bracing, transportation, access for material, equipment and personnel, etc. required to perform this scope of work.
39. This Trade Contractor's input and communication will be a vital key to ensure the demolition portion of this project is completed safely and on time. This Trade Contractor shall notify the Construction Manager within 24 hours of discovery of any issue that might impede this scope of work.

40. Strict attention shall be paid to the bid schedule. These dates are critical and must be met by this Trade Contractor. Overtime and additional manpower should be included where required to meet the aggressive schedule.
41. Shift work, multiple mobilizations and out-of-sequence work could be required.
42. Provide a detailed installation schedule within one week after the post bid interview meeting.
43. This subcontractor shall notify the Construction Manager within 24 hours of discovery of any issue that might impede this contractor's scope of work.

44. Each Trade Contractor shall provide personnel for traffic control and traffic coordination during all deliveries of material and equipment required in their scope of work. The Trade Contractor shall coordinate all such activities with the Construction Manager and the City of Cincinnati, Department of Transportation and Engineering.

45. Trucking, Wide Load Permits, Traffic Control, Road Closures, etc. to be provided by this Trade Contractor as required by all Authorities having Jurisdiction and Stadium Operations.
46. Provide traffic control and safety-controlled access zones for hoisting as required

Include coordination with Stadium Staff as required.

47. Include Stadium Security Standards, including but not limited to, daily check-in/out, keeping all exterior doors closed, pre-planned deliveries, etc.
48. All material to be staged on dunnage at all times. Any mud or debris must be cleaned off prior to installation.
49. This contractor is responsible for Daily clean-up of all dunnage, debris, etc. from deliveries and hauling off-site within a timely manner.
50. Include separate mobilizations as required to fit project flow/schedule.
51. Shift work, multiple mobilizations and out-of-sequence work could be required. .
52. Include a detailed schedule and plan; based on the provided bid schedule.
53. This Trade Contractor is required to attend a pre-installation meeting to review and discuss the site plan, installation procedures, rigging procedures and company safety program prior to starting. This information must be submitted a minimum of two (2) weeks prior to the Trade Contractor's pre-installation meeting for review.
54. Include all utility locates as required to complete ground/concrete penetration permits. This Trade Contractor shall include all utility location services required for this scope of work.
55. This Project will follow the 5S protocol. This requires just in time deliveries of all material and equipment. As a result, this Trade Contractor shall only bring enough material and equipment to accommodate between 5 days' worth of installation. All other material must be stored off site and all trucking and storage costs associated to be provided by this Trade Contractor. New shipments of material will only be permitted when the existing 5 days' worth of material has been exhausted.
56. All trash and debris must follow the *nothing hits the ground/floor* mentality and be placed in hoppers on a continual basis. Hoppers, skip pans, other means of transferring material, etc. to be provided as needed by this Trade Contractor. A minimum of (2) trash hoppers/dump carts per crew must be included by this Trade Contractor. Staging hoppers in other areas of the project will not be permitted. Dumpsters to be provided by CONSTRUCTION MANAGER. Dumpsters to be located within reach of the provided tower crane.
57. Dumpsters will be provided by the Construction Manager.

58. Include proper disposal of all debris/materials in a timely manner. Placement of the dumpsters to be coordinated by the Construction Manager.

59. This Trade Contractor shall be responsible for dust/silica control as required for this work scope. Include broom sweeping of areas below as required to remove dust and debris caused by this scope of work.
60. The Construction Manager will provide general use fire extinguishers on each floor as necessary. Additional fire extinguishers and fire blankets needed for specific tasks shall be provided by this Trade Contractor including when fire extinguishers are required for hot work permits.

61. Include fire watch personnel during all hot work activities. Provide fire watch during and for at least 4 hours after flame-cutting operations.

62. The Construction Manager will provide the tower crane.

63. Any additional cranes/hoisting required for moving material out of reach of the cranes to be included by this Trade Contractor.

64. Provide proposed hoisting plan with submission of bid.

65. This subcontractor shall provide access/logistics for transporting material. All equipment, means & methods, etc. to be included.

66. Rigging plan to be provided by this Trade Contractor prior to starting work. Rigging plan to be reviewed by Structural engineers. Take into account appropriate slab loading requirements if required.

67. Rigging to be done by certified riggers with appropriate certifications and training. Certified Riggers are required to wear Blue Hi-Viz clothing. Whistle will be required for alerting the surrounding area of a new lift.

68. Include temporary shoring/bracing as required to install the work.

69. This Trade Contractor to identify one foreman who will act as site quality control manager and be responsible to coordinate with testing / inspection agency. He/she will also be responsible for maintaining a Construction Manager approved quality / inspection plan & log as stipulated.
70. Provide all contractor required inspections as required by specifications.
71. Include coordination with third-party inspection/testing agency. Coordination shall be carried out in a timely manner to allow proper testing/sampling to be taken at each concrete placement.
72. Perimeter guardrails to be provided by others. Any modifications to perimeter fall protection to complete this scope of work is included. Coordination of such modifications to be the responsibility of this contractor and reviewed with the Construction Manager before modifications begin. Modifications shall not reduce the effectiveness of the fall protection.
73. Coordinate with the Construction Manager the removal and reinstallation of any temporary protection such as railing systems, fencing, and other hard barriers.
74. Danger tape is not permitted on Messer sites. Cones and Bones, Plastic Chain, and flagging are acceptable alternatives unless located at a leading edge. Temporary edge railings to be coordinated with the structural steel. Railing to be located back from slab edges and openings. Railings are to be left in place until permanent conditions are achieved.
75. Controlled Access Zones (CAZ) will be heavily coordinated with Construction Manager. These shall be reorganized and evaluated for need on a daily basis. If this Trade Contractor is not utilizing area below then the CAZ should be removed so other Trade Contractors can work in that area.
76. Provide complete protection of all adjacent existing conditions/finishes including but not limited to roofing, glass, skylights, pedestrian walkways, etc., from dust, slurry, debris, fire, heat, etc. Remove protection to accommodate succeeding work activities.
77. This subcontractor shall at all times protect adjacent finishes and progressing work during its installation. Existing fire suppression and fire alarm will be in operation throughout the project.

78. Protection of existing spaces from slurry, dust, etc to be included for this scope of work. Cleanup shall be completed on a continuous basis.
79. Include final cleaning of work areas of this contractor's material, debris, etc. prior to mobilization of subsequent contractors
80. Include final cleaning of all items installed by this Trade Contractor.
81. Take special note of all requirements within section 00 73 19a – Section 3.19 Dropped Object Prevention & Overhead Protection
82. Include scaffolding systems or other means as necessary and as needed to access the work or remove materials for this scope of work.
83. All shop drawings are to be included. Prefabrication is required and prefabrication plans are to be included during the shop drawing process. Means and methods of engineering to be included by this Trade Contractor.
84. The Hilltop Parking lot can be utilized for onsite prefabrication and storage.
85. A 3D as-built model will be provided by the Construction Manager to assist this trade contractor in developing shop drawings. This Trade Contractor to use the model to design, fab, construct, install, etc. new items attached to the existing structure and that can be installed during the on-season.
86. Coordination with all other trades is included to allow each Trade Contractor to install their scope of work.
87. Coordination, scheduling and providing necessary material and equipment including lifts to allow for third-party inspector to properly inspect the work shall be the responsibility of this Trade Contractor. Any remediation work as the result of a failed inspection shall be the responsibility of this Trade Contractor.
88. This Trade Contractor to provide access for inspections. These inspections will happen during normal working hours, and additional equipment shall be provided as needed to prevent the delays performing the work.
89. This Trade Contractor and all its sub-subcontractors to participate in Messer Structural Handoff process.
90. Reasonable and historical weather days (wind, rain, snow, etc.) are included.
91. Trade Contractors shall retain services of a licensed structural engineer to design and supervise the construction of all scaffolding for workmen.
92. Trade Contractors shall include all cost for labor, material, Rental Equipment, etc in the bid to clean bird or other animal excrement in order to perform the work.
93. Prior to the start of work, document (video or digital photos) existing conditions, such as condition of Administration Roof including Rooftop HVAC units, and Plaza concrete deck and review results with the Construction Manager.

2.C.1 CONTRACT DESCRIPTION **TC-11 Facade**

The Scope of Work in this **Trade Contract TC-11** includes all labor, material, tools, equipment, services, and supervision necessary to complete all work specified herein, in accordance with the Contract Documents, as described below to a complete functional safe and operating state.

Included is the Work as indicated in this **Trade Contract Description TC11** the Drawings, Division 00 General Conditions and Division 01 of the General Requirements. This scope of work includes, but is not necessarily limited to, the following Specification Sections:

05 55 00 Metal Fabrications
07 42 13.15 Formed Perforated Metal Plate Wall Panels

The following items represent specific inclusions in this **Trade Contract TC-11 Facade.** They are provided as a guide to aid in the assignment of work and in no way should be construed as being all-inclusive.

This Contract shall include:

1. Provide / Include all notes in specification section 01 11 00 2.1B General Provisions of Bid Package #5 Trade Contracts

2. **Strict Attention shall be paid to the bid schedule. These dates are critical and must be met by this Trade Contractor. Overtime and additional manpower must be included where required to meet the aggressive schedule**

3. Provide complete design-build services, engineering, fabrication, finishing, delivery, and installation of all metal panel substructure / supports, perforated metal panel assemblies, & blade panels indicated by the Contract Documents or reasonably inferable for a complete, code-compliant, weather-resistant, and fully coordinated installation. Scope includes panels, sub-framing, attachment systems, perimeter closures, trims, flashings, accessories, and all incidental components required for a complete assembly. This contractor understands that drawings are preliminary and incomplete and it has included all items which are reasonably inferable to be required or are required by code or to provide complete and functional systems. Contractor shall be responsible for coordination with all trade contractors specifically including, but not limited to the Structural, HVAC, plumbing, electrical, and fire protection subcontractors.

4. Provide a complete South Scoreboard façade system including but not limited to, structural components, perforated panels, metal fins, hardware, etc.

5. Base Bid number to include Delegated Design, Fabrication, and Installation as one lump sum number.

6. Permits and Fees – The CM shall provide the building permit. This contractor shall obtain and pay for all necessary approvals and permits from authorities having jurisdiction over the work covered under this Subcontract needed outside of the building permit. This contractor shall coordinate these activities and obtain all approvals and

signatures on the master building permit located in the Construction Manager's field office.

7. Include field measuring, layout, templates, cutting, drilling, fitting, hoisting, lifts, scaffolding, and access equipment required for this work. Scoreboard is located above an active Administration Building. Review site conditions for access. Refer to Site Logistics and Plaza Capacity diagram in Spec Section 01 32 16 Construction Progress Schedule.

8. Include Engineering calculations, shop drawings, product data, samples, mockups, testing support, closeout documents, warranties, and record drawings. Including utilizing a 3D model for coordination & design. See Specification Section 01 11 11 Virtual Design and Construction Coordination.

9. Tower crane and operator to be provided by Construction Manager. The operator will be on site for a minimum of 50 hours per week. Any scheduled overtime work will be paid for by the Construction Manager. Any additional hoisting, lifts, scaffolding, access, etc. to be provided by TC 11 Façade. The tower crane is not for the exclusive use of any one Trade Contractor. TC-11 will have priority during their designated schedule/install window. Refer to Maxim Crane Tower Crane Shop Drawings in Spec Section 01 32 16 Construction Progress Schedule.

10. Include coordination with South Scoreboard Steel Fabricator, Erector, Videoboard, etc. subcontractors. Refer to the Structural Model in the bid documents.

11. **TC-11 Façade will be required to provide Prefabrication and Modularization into their bid and into their design/planning and installation phases of the work.**

12. Take special note of all requirements within Section 00 73 19a – Section 3.19 Dropped Object Prevention and Overhead Protection.

13. TC02 Demolition will provide roof protection for the Administration Building. The Administration Building roof cannot be used for staging/storing material or equipment unless approved by the Team, the Construction Manager and the Structural Engineer. Any additional protection for this scope of work shall be provided by this Trade Contractor.

14. Whenever this Trade Contractor is performing hot work activities, (welding, grinding, cutting, etc.), this Trade Contractor shall provide a full-time fire watch / roof cleanup person. This person must be provided with two fire extinguishers, a dump cart, broom, magnet roller, etc.. This person must be trained and capable of using a fire extinguisher per manufacturer's instructions. This person must be trained and capable of using the roof water sprinkling system provided by TC10 General Trades. This person will be responsible for shutting off the water after the minimum 30 - minute fire watch has passed after the last hot work is performed. Placing anything on existing admin roof is only permitted after review and approval by the Team and the Structural Engineer.

15. TC-11 Façade Delegated Designer shall be a Registered Professional Engineer and is required to include a one $1 million Professional Liability E&O policy. Drawings to be stamped by a Registered Professional Engineer as required on each page; including

calculations. A single registered professional engineer shall be responsible for each component of the façade provided by TC-11 including the interaction between façade components and the façade to the structural steel (provided by others).

16. Any additional cranes/hoisting required for lifts, material movement, etc outside the reach of the tower crane, such as swing-stage, rough terrain forklift, etc. should be included by this Trade Contractor
17. The project has very limited laydown. The Hilltop Parking lot may be used for some laydown or staging deliveries. There are special events that require use of surrounding areas & Parking lots starting July 20, 2027. Coordinate any use of the Hilltop Lot with the Construction Manager.

18. All hoisting shall include traffic control and safety-controlled access zones for hoisting. Lifting over top of the Administration Building is not permitted.

19. Only bolted connections are acceptable to existing galvanized steel structure, unless approved by the Structural Engineer.

20. Include coordination with future lighting, graphics, signage bid package. These packages will be issued for bid later. This contractor shall include a mounting location at each blade for future lighting.

21. Mockups to be installed free-standing and in a location per the direction of the Team / Construction Manager. The mockup needs to be completed early enough in the process to allow owner & design team comments to be implemented into the final product.

22. Provide all samples indicated per the specifications within 20 days of the Post Bid Review Meetings. Additional samples of finishes could be required by the owner and shall be included in the Base Bid.

23. Include dissimilar metal protection between this contractor's materials and connection points to the scoreboard structure.

End of Section

SECTION 01 11 11 – VIRTUAL DESIGN & CONSTRUCTION COORDINATION

PART 1 - GENERAL

1.1 SCOPE

A. This section identifies and outlines the process for construction coordination using 3D Virtual Construction Models. 3D Models integrated in Autodesk Forma - Model Coordination platform, will be used for the coordination process to identify and eliminate installation conflicts between trades and disciplines. Completed coordination will fit MEPFP, and any other trades included in the coordination process, within the design parameters provided by the Architect and Engineers.

B. Specific administrative and procedural minimum actions are specified in this section, as extensions of provisions in General Conditions and other contract documents. These requirements have been included for special purposes as indicated.

C. MEPFP Equipment, Sheet Metal Ductwork, Mechanical Piping, BAS Controls, Plumbing, Process Piping, Electrical, Low Voltage, Fire Protection, Kitchen Equipment, Pneumatic Tube, Conveyance Equipment, Drywall Framing, Miscellaneous Metal, above ceiling Equipment Supports, and Steel Fabrication Subcontractors will be required to provide at minimum: 3D solid models for the coordination process.

D. Subcontractor shall provide the necessary qualified staff to generate their 3D coordination models and subsequent drawings extracted from those models. All personnel shall have previous experience and will be assigned to the job dedicated solely for the coordination modeling process. If Subcontractor is responsible for multiple divisions of work, Subcontractor shall provide a minimum of one modeler for each division of work. One modeler shall not be responsible for more than one division of work. Field Personnel assigned to the job, such as Superintendents or Foreman actively running this project will not be acceptable for this position. Subcontractors at the Post Bid Review Meeting shall submit the name(s) or personnel who will be assigned to perform this work along with a brief description of their 3D modeling experience and the specific modeling software that will be used for the project.

E. If the Subcontractor does not have the qualified in-house staff to generate their 3D coordination models and are using a third party consultant, that consultant must be approved by the Contractor prior to the Subcontractor awarding their modeling scope of work. The Subcontractor will provide a competent person from their company capable of making decisions on their scope of work, along with their consultant modeler(s), at each coordination meeting. The consultant will be considered an employee of the Subcontractor and be held to the same standards as the rest of the project teams in-house modeling staff outlined in this specification.

F. Each Subcontractor shall be fully responsible for keeping their 3D models, and drawings extracted from those models, updated throughout the duration of the contract such that the 3D model and 2D drawings are maintained as a “record drawing” of the facility. In conformity with the requirements of the contract, the updated drawings shall be available for review by the Contractor at any reasonable time during working hours. The Subcontractor shall be responsible for producing any additional schematic or 2D drawings required to construct the facility and/or

to document the "record drawing" for the project. The Subcontractor shall submit to the Contractor any such drawings or schematics as required.

G. All work on the coordination drawings (including BIM's) shall be performed by competent draftsmen in a clear legible manner utilizing standard industry conventions. All drawings shall be properly dimensioned from previously agreed upon column lines or site control. Determination of how drawings shall be dimensioned will be made by The Contractor during the coordination kickoff meeting. Incorrectly dimensioned drawings will not be accepted. All Subcontractors shall be responsible for providing their coordination drawing files according to the established coordination schedule. It is the responsibility of each Subcontractor to supply a sufficient number of draftsmen to avoid delaying the coordination process and shop drawing submittals.

H. Each Subcontractor is required to collaborate with each other through Autodesk Forma - Model Coordination platform, email, telephone, or in person to resolve basic clashes outside of the regularly scheduled coordination meeting times, and arrive at the meeting prepared to address the unresolved clashes in a constructive manner.

I. Subcontractor shall participate in BIM coordination meetings and follow up review meetings as requested by the Contractor. Subcontractor agrees that because of the information exchanged at such meetings, both the digital submission and the Work depicted in the Subcontractors' digital submissions, may require changes or modifications by the Subcontractor to achieve compliant coordination with other elements of the Project, including when provided by others. Such changes/modifications shall be accomplished at no additional cost or time impact to the project.

J. Subcontractor agrees that; neither participation in the BIM process, nor the use of BIM, relieves the Subcontractor of the responsibilities described in this document, including to, coordinate their work with the work of other trades, and strictly comply with other requirements of the Subcontract Agreement, the Contract Documents, and Specifications. It is expressly understood and agreed that, notwithstanding the requirement for submittals, traditional shop drawings and other submissions shall be provided by Subcontractor as described in the Contract Documents. No party will be entitled to any claim for extra time or money, dispute, controversy, cost or expense increase, arising out of the direct or indirect use of BIM.

K. Subcontractor acknowledges and agrees, that the Contractor shall incur no responsibility or liability with respect to the BIM or use thereof, including that resulting from errors, omissions or deficiencies in the BIM process. In the event that Subcontractors provide deficient information or data that does not represent the Work, or is corrupted, or contains a virus, and/or otherwise damages or delays the BIM process, the Subcontractor shall bear all costs associated with reconstructing their BIM's, and to remediate such deficiencies and their negative impact and effects at no additional costs to the Contractor, the Owner or other Subcontractors.

L. This specification section works in conjunction with any Owner, Architect or Contractor incorporated BIM Execution Plan(s), if applicable to the project.

1.2 DESCRIPTION

A. Extent of Model(s)

1. The 3D model, in Plan View, shall extend (at a minimum) five feet beyond the exterior walls of all new construction on site or as directed by the Contractor.
2. Vertically, the model shall extend from the lowest extent of the foundations, or lowest underground piping, and up through and including the roof and penthouse.
3. To the extent that the building systems are designed, they will be included in the full vertical and horizontal extents of the model including underground utilities and roof-mounted items.
4. 3D architectural and structural base model will be provided with a scope representing at a minimum the information typically drawn in two dimensions and as required for proper coordination. The following identifies the Level of Development (LOD) for items that will be provided by the Contractor or the Architect.
    a. Architectural: All exterior slabs, walls, doors, windows, steps, railings, and roofs will be modeled. All interior floor slabs, walls, ceilings, doors, windows, toilet partitions, shower stalls, large furniture that would make access from a ladder difficult, and casework (as needed for coordination) will be modeled.
    b. Structural: Structural concrete and steel elements will be modeled including columns, beams, stair risers and landings. Handrails will not be modeled unless integral to coordination process.
    c. Owner provided equipment will be modeled where there are large items where these items, or features of these items, will have an impact on coordination.
    d. Elevator shaft clear space will be modeled. Nominal elevator cab size and overrun shall be modeled including hoist beam. Elevator cabs will not be modeled.
    e. Furnishings will be modeled if deemed necessary for coordination purposes.
    f. Architectural and Structural Bulletin changes will be modeled if deemed necessary for coordination purposes.
5. Level of Development (LOD) required for other coordination team members (the Contractor reserves the right to require additional information to be included in the coordination model):
    a. Large MEPFP Equipment:
        1) Model a "travel-path" into the building to the point-of-installation for all items that are larger than a personnel-door / double-door/ corridor width / freight elevator door opening so that coordination of means & methods + sequence of construction can be coordinated between trades to ensure a travel path will be available for major equipment when it arrives (including equipment that ships in pieces or "splits" that have to be assembled in place and other large items that have a long lead time) so that dedicated construction openings or late-installation of certain walls can be determined in advance of equipment arriving.
        2) Early Procurement of Equipment: Trades are to model owner/contractor procured equipment per approved specifications and submittals provided by the owner/CM/GC. Trades are to model final connections between their systems and provided equipment.
    b. HVAC: At a minimum, all ducts and air handling equipment shall be modeled to the outside face dimension including flanges, joints, fittings, connections, insulation, offset requirements, dampers, controls, access zones, control panels, diffusers and grills, associated piping (to outside diameter of pipe or insulation, whichever is greater), any electrical work, and hangers and supports associated with the HVAC system. Control cables outside the cable tray and wire management hooks are not required to be modeled unless the area is significantly congested as determined by the Contractor. Equipment (with pads) will be modeled to overall height, width, and

depth with clearance, maintenance, and installation access zones (see 'p.' below) per equipment specs, building code, or Owner requirement.

c. Plumbing, Mechanical Piping, Lab/Medical Gas: At a minimum all plumbing, piping, equipment (with pads), valves, cleanouts, vents, PRV stations, condensate receivers, flash tanks, fittings, any other system accessories, hangers, supports, and piping connections to equipment will be modeled to its overall height, width, and depth; including access zones for valves and cleanouts. Pipes will be modeled to the outside diameter of the pipe adding insulation as its own entity where applicable or the pipe insulation, whichever is greater. Plumbing-feeding fixtures such as sinks, toilets, drinking fountains, floor and roof drains shall be modeled for rough in location.

d. Fire Protection: At a minimum, all components of the fire protection system shall be modeled including all piping, valves, valve cabinets, fire pumps (with pads), sprinkler heads, hangers, supports, access zones (see 'p.' below), and control panels.

e. Pneumatic Tube Systems: At a minimum all piping, hangers, supports, transfer stations, diverters and pumps shall be modeled including required clearance and access zones (see 'p.' below).

f. Electrical: At a minimum, all panels and devices (including access zones as required by the local AHJ), light fixtures (with installation clearances), cable trays (with clearance above and to at least 1 side per Owner requirements), conduit larger than ¾", hangers, busways, power feeds to the equipment, generators, and switchgear will be modeled. Grouped (2 or more) ¾" (or less) conduit will be modeled to reflect the overall space requirements.

g. Fire Alarm: At a minimum, all components of the fire alarm system shall be modeled including all panels and devices with access zones and conduit larger than ¾". Grouped (2 or more) ¾" (or less) conduit in a particular location will be modeled to reflect the overall space requirements.

h. Telecommunications: At a minimum, all cable tray, wire managements hooks, conduit larger than ¾", and communication racks and cabinets will be modeled. Grouped (2 or more) ¾" (or less) conduit in a particular location will be modeled to reflect the overall space requirements.

i. Structural Fabrication: At a minimum, all columns, beams, girts, purlins, bracing, girders, trusses, joists, kickers, steel shapes, slabs, pre-cast concrete elements, laminated wood framing, metal floors and roof decks, pre-engineered building components, miscellaneous framing, trestles, and catwalks shall be modeled.

j. Conveyance (elevators, escalators, etc.): At a minimum, all equipment including service access, support connections, and mechanical spaces shall be modeled.

k. Kitchen Equipment: At a minimum, all manufactured equipment and supporting elements requiring field installation either by this trade or by others shall be modeled. Include rough in locations for equipment services. Refer to HVAC requirements for ductwork associated with hoods or exhaust.

l. Framing: Although standard wall and ceiling framing may not be modeled; any atypical framing features required for tiered ceilings, soffits, curved walls, arched ceilings, etc. should be modeled to ensure there is enough available space for the additional framing / bracing for these components.

m. All trades: Seismic bracing shall be shown where required.

n. All trades: All existing to remain systems, regardless of size, shape and location, shall be verified in the field manually or captured through laser scan data and modeled adhering to the same requirements for the trade detailed in this section.

o. All trades: All required access panel locations and sizes shall be shown as required.

p. When modeling Access and/or Clearance Zones:
   1) Above ceiling equipment zones must be modeled per equipment spec, building code, or Owner standard – whichever is greater; and must extend down to the level below to insure there is adequate space to land a ladder for access.
   2) Zones for equipment installed below ceiling must be modeled per equipment spec, building code, or Owner standard – whichever is greater; and must extend down to the level below.
   3) Unresolvable clashes with Zones must be approved by the Contractor.

B. Software Requirements
   1.
   2. Autodesk Forma model coordination license(s) will be provided to the subcontractor by the Contractor.
   3. Each Subcontractor must provide and be able to read 3D solid model files in at least one of the following standard formats: DWG, NWC, IFC, DWF, or DGN. Other file types will work for submission if they are readable by Navisworks. All files must be created as ACIS solids (including insulation) so accurate clash detection can be performed. 2D drawings will be extracted from the 3D model to maintain a true representation of the model into the drawings. To ensure the measurements on the 2D drawings match the model, the model features in the 2D drawings may not be edited in any way after the extraction from the 3D model.
   4. Subcontractors shall inform the Contractor of any object enablers, software plug-ins, 3D viewers, etc., required for the Contractor to view their 3D models with the latest version of AutoCAD and Navisworks. The Subcontractor is responsible for uploading these specific object enablers to the project File Sharing site.
   5. The Contractor requires all Subcontractors to send a test file of their model prior to award of contract in order to ensure that the model format is usable for the coordination process. It is understood that all Subcontractors participating in the coordination process shall provide model files compatible with Autodesk Navisworks.

1.3 PROCEDURE

A. Coordination Process and Procedures
   1. Autodesk Forma - Model Coordination platform will be integrated into project workflow to improve collaboration and better identify, track, and resolve issues. Autodesk Forma - Model Coordination platform will be the main form of communication for coordination:
      a. Trade Contractors are expected to communicate in Autodesk Forma - Model Coordination platform through chat, create issues, assign issues, comment on issues, and close resolved issues.
      b. Weekly reports generated from Autodesk Forma - Model Coordination platform will be sent out to the entire project team for tracking and accountability. Trade-specific issue summary reports will be sent out to each trade's project management team.
   2. Architect and Engineer will supply, at a minimum, 'DWG' files for Subcontractors to use in developing their 3D coordination models. It is possible that each Subcontractor may need to pay a fee for the electronic files and sign appropriate release forms from the A/E.
   3. The Contractor will prepare a Coordination Model comprised of Architectural, Structural, and Civil (if applicable) models prior to starting the coordination process. This model shall be posted to the project File Sharing site for Subcontractors for reference use only, as well

as hosted to Autodesk Forma - Model Coordination platform. Models will also reference items furnished by the Owner as they relate to coordination.

4. If the building structure is steel, the initial coordination model containing the structural engineer's model will be updated with a steel fabrication model (when available). This will require all trades to review the model and may require some re-coordination.
5. Before starting the Coordination Process, the Contractor and Subcontractors will review the pre-coordination model, 2D files, and drawings at a scheduled pre-coordination meeting. Information gathered at this meeting will be used to determine priority areas, identify potential problem areas, and note any details on the drawings that are not currently modeled that may need to be added to the model.
6. BIM Coordination meeting times, posting frequencies and schedule will be agreed upon at the coordination kickoff meeting. There are 3 types of coordination meeting styles to choose from listed below. Required meeting times/frequencies are at the discretion of the Contractor and are subject to change at any time.
   a. LOCK DOWN – coordination will be conducted in consecutive all day meetings until coordination has been completed. This process should be used if it's determined that coordination can be completed within 2 weeks (10 working sessions) or less. Specific times, durations, and frequency per week to be established in detail between the Contractor and Subcontractors.
   b. WEEKLY – coordination will be conducted on a weekly basis until coordination is complete. No single meeting should last more than 2 hours. For this method to succeed mechanical Subcontractors and the Contractor Lead must communicate multiple times per week outside the weekly scheduled meeting.
   c. COMBINATION – A formula of Options a. and b. combined, as agreed upon between Contractor and Subcontractors.
7. The Contractor will lead the coordination team and drive Autodesk Forma - Model Coordination platform and Navisworks during the coordination meetings. Subcontractors shall post prepared 3D coordination models to the project File Sharing site. The Contractor will combine each 3D model into a single 3D model and facilitate determination of conflicts. Once conflicts are determined, all coordination team members are responsible for coordinating their work, including re-work of the 3D model until conflicts are minimized and resolved in a satisfactory manner.
8. Accurate and timely coordination is the responsibility of all trades. The Contractor will schedule meetings as required, which Subcontractors must attend. Failure to attend is a serious violation of this agreement, the Contractor will supplement under written notice modeling work of absent Subcontractor, all cost associated with supplementation will be borne by the Subcontractor on notice. Modeling work declared improperly coordinated is non-compliant, and may require the Subcontractor to relocate work as directed by the Contractor. There will be no compensation to any Subcontractor for relocating any part of the work that has been installed without proper coordination between all the Subcontractors, and released by the signoff process through the Contractor for installation. Any work installed not in accordance with the approved coordination composites, that creates additional work to other Subcontractors is non-compliant and shall be removed. The cost of such additional work shall be assessed to the responsible Subcontractor as determined by the Contractor. Errors in coordination will be resolved by the Subcontractor at its own expense. Where agreements cannot be reached, the Contractor will furnish a final resolution. The non-compliant Subcontractor will be responsible for the expense of said resolution.
9. Subcontractors must follow the standard file naming convention. The file name will consist of an agreed upon project designation, an approved abbreviation of their discipline,

followed by the Level, Building, Area, or other descriptor. Below are some typical sample file names (there may be projects that do not fit this envelope; those will be dealt with as they come up):

a. CGHQ-HVAC-L1 (typical naming structure – project, discipline, level)
b. WP79-ELEC (no level callout required if project has only one level)
c. NRDT-E-L1-HVAC (Project, Building, Level, Discipline)

10. outline to be used to prioritize clash resolution between systems (subject to change per the project's BIM Execution Plan):
    a. Architecture (walls, ceilings, soffits, framing (typical and any required for additional support) and Structure (columns, beams, joists, kickers, and any additional structure required) will take precedence over other disciplines.
    b. All code required elements and their integrity are to be maintained.
    c. Maintenance and service aisles shall be maintained.
    d. Underground routing and stub-up locations (where applicable).
    e. Shafts along with core and sleeve locations (where applicable).
    f. Large HVAC duct and equipment, and gravity pipe will typically have priority among the MEPFP trades.
    g. FPRO sprinkler heads that are required to be centered in ceiling tiles will only take precedence if conflict occurs at drop location.
    h. Conflicts will be resolved by the coordination team to take into consideration the best interest of the overall project schedule and budget.
11. All Subcontractor participants shall agree and understand that the 3D coordination model is only a means for coordination and that each Subcontractor is responsible for cross-referencing all contract documents with model information.
12. If coordination meetings occur onsite, each Subcontractor will have a competent person(s), with a laptop, who is capable of running their design software and making competent decisions that do not negatively affect their system at all coordination meetings so changes can be worked out and verified during the meeting.
13. Subcontractors not internally modeling their own work must still have a representative at each meeting to make system decisions along with the external modeler also available either on site or via WebEx. Any cost associated with a web meeting that would not otherwise be required due to external modeling will be the responsibility of that Subcontractor.
14. Any Subcontractor responsible for more than division of work must have clashes between those trades worked out prior to coordination meetings. If clashes cannot be corrected before a meeting the issue(s) must be communicated to the coordination team for their input in potential resolutions.
15. Changes made to the original design intent during the coordination process shall be clearly documented and submitted to the Architect/Engineer for approval.
16. Each Subcontractor shall be responsible for updating their BIM's and "field installation" drawings as required to maintain record coordination and construction information. The Contractor may require proof record BIM's and drawings as a condition for payment. Updates shall include but are not limited to:
    a. Correction of issues found during coordination
    b. Incorporation of Bulletin's and RFI's
    c. Submittal modifications and revisions on A/E approved documents
    d. "Record drawing" field modifications
    e. "Record drawing" documentation items such as valve tags, access doors, etc.

17. The Contractor will sync the coordination model to Autodesk Forma - Model Coordination platform, and post the results of each coordination meeting that will include, at a minimum, the following items:
    a. NWD file of the model used at that meeting for coordination
    b. Updated Coordination Schedule (PDF) - if applicable
    c. Signoff Sheet (PDF) - if applicable
18. Signoff shall occur when all coordination team members are satisfied that coordination conflicts have been adequately resolved. All Subcontractors involved in the coordination process shall approve the Contractor's signoff review document on Autdoesk Build – Docs section - for each completed coordination area. Authorized representatives are to be designated by each Subcontractor and approved by the Contractor.
19. Signoff of the 3D Coordination model and the subsequent 2D drawings extracted shall signify the Subcontractor's intention to complete installation as indicated on the coordination drawings. Each Subcontractor shall be responsible for locating their respective components as shown on the 3D model and field installation drawings. Field installation conflicts will be resolved by the affected party at the direction of the Contractor with no additional cost to the Contractor or the Owner. The approved review documents will remain in the Contractor's possession.
20. Field QA/QC checks will be performed by the Contractor to ensure the installation of MEP/FP systems are complaint with the tolerances identified within the BIM Coordination effort.
21. Conflicts that result in re-work due to an item not being included in the modeling process, a lack of modeling detail, or improper field installation will be subject to re-work at no additional cost to other Subcontractors, the Contractor, or the Owner. The Subcontractor in error will be responsible for all costs associated with re-working their system, and/or the cost of having another system(s) move.
22. Each Subcontractor will provide all other parties involved in the coordination process a copy of their completed documents. This can either be a hard or digital copy, depending on which type is preferred by each Subcontractor.
23. Each Subcontractor is required; in addition to the development of coordinated models, to submit hard copies of their respective coordinated systems in a 2D format as required by the project documents and specifications for approval through the regular submittal process. Subcontractors are responsible for producing 2D coordinated drawings after resolving all clashes for a designated area. This file shall include all coordinated drawing information, full dimensions (especially elevation dimensions), text, tags, etc. needed to successfully install the systems in the field.
24. Each Subcontractor is required to submit a valve map drawing in PDF format, highlighting and labeling where all system shut-off valves are located on the architectural background and convey what downstream areas they affect.
25. Each Subcontractor is required to submit a 2D drawing indicating all ceiling mounted devices, including but not limited to, diffusers, lights, speakers, cameras, exit signs, access panels, sprinkler heads, and all other AV equipment and ceiling devices.

B. Modeling Process
1. All Subcontractors' drawings and model files shall be based on the origin point provided by the Contractor. The cost of any changes required by the Subcontractor to their drawings or models, due to the use of an unauthorized origin shall be borne by the Subcontractor.
2. All base models shall be modeled to a Level of Development (LOD) equal to or greater than typical shown on a 2D plan, section or elevation drawn at 1/8" = 1'-0". Detailed

models for specific areas of the project may require greater Level of Development. Refer to the Project BIM Execution Plan for specific LOD per modeled element, per discipline.

3. The Model working units shall be feet/inches. The level of tolerance (allowable interference) shall be determined at the coordination kickoff meeting.
4. If a Subcontractor discovers an error, inconsistency, or omission in its own information or submissions, or the information/submissions provided by others, or any BIM deficiency, it shall promptly report the same to the Contractor via written notice, and shall contain all relevant specifics.
5. Each Subcontractors Model will show only their disciplines equipment with no entities allowed outside the areas defined in 1.2.A. Any text, balloons, or leaders that reference changes made must be on a single separate layer (or workset) so it can be easily hidden before being inserted into the coordination model. Model entities used for reference outside the defined modeling area must be hidden.
6. may create their model in any software that meets the export to Navisworks requirement listed in 1.2.B.1, however, the Owner may require a Revit model upon completion of the project to include any changes made after coordination was completed and/or as-built field conditions. If not originally created in Revit, a Revit model must be created using native Revit objects directly from the coordination model. Any inconsistency between the coordination model and record model will be corrected by the model author.
7. The Subcontractor is responsible for creating and maintaining any necessary Facility Management data required by the Owner or Contractor throughout the process.
8. The Subcontractor will group and name their equipment geometry in accordance to the equipment schedules outlined in the contract design documents for import into the Contractor's QA/QC software.
9. For all other model definition see 1.2.A.

1.4 SCHEDULE

A. coordination team shall agree on a coordination schedule based on the Reverse Phase Schedule (RPS). This schedule should take into account delivery and long lead items of all Subcontractors involved in the coordination process. The coordination schedule is a guide and the overall project schedule will determine completion date for coordination. If for any reason schedule is not maintained, Subcontractor(s) will be held responsible per Messer's Subcontractor Agreement included in Section 00 52 00 – Agreement Forms.

B. final list of drawings and the coordination drawing schedule will be agreed upon by all Subcontractors and updates to the same, shall be binding on the Subcontractors. Manpower, equipment and material adjustments as necessary to meet the Coordination Drawing Schedule as created by the project team members is the responsibility of each Subcontractor.

END OF SECTION 01 11 11

SECTION 01 21 00 - ALLOWANCES

PART 1 - GENERAL

A. SUMMARY

A. Section includes administrative and procedural requirements governing allowances.

B. Types of allowances include the following:

1. Lump-sum allowances.
2. Unit-cost allowances.
3. Quantity allowances.
4. Contingency allowances.
5. Testing and inspecting allowances.

C. Related Requirements:

1. Section 01 22 00 – Unit Prices for procedures for using unit prices.

B. SELECTION AND PURCHASE

A. At the earliest practical date after award of the Subcontract to the Trade Contractor, advise Construction Manager of the date when final selection and purchase of each product or system described by an allowance must be completed to avoid delaying the Work.

B. At Architect's request, obtain proposals for each allowance for use in making final selections. Include recommendations that are relevant to performing the Work.

C. Purchase products and systems selected by Architect from the designated supplier.

C. ACTION SUBMITTALS

A. Submit proposals for purchase of products or systems included in allowances, in the form specified for Change Orders.

D. INFORMATIONAL SUBMITTALS

A. Submit invoices or delivery slips to show actual quantities of materials delivered to the site for use in fulfillment of each allowance.

B. Submit time sheets and other documentation to show labor time and cost for installation of allowance items that include installation as part of the allowance.

C. Coordinate and process submittals for allowance items in same manner as for other portions of the Work.

E. COORDINATION

A. Coordinate allowance items with other portions of the Work. Furnish templates as required to coordinate installation.

F. LUMP-SUM ALLOWANCES

A. Allowance shall include cost to Trade Contractor of specific products and materials ordered by Owner or selected by Architect under allowance and shall include material, sales and/or use tax, labor (and/or erection), overhead, tools, equipment, delivery to project site, unloading and warehousing if necessary.

B. This type of allowance shall be adjusted by the difference of the allowed amount vs. actual expenditures performed on a T&M basis, usually with pre-agreed to unit rates.

C. Example: A bid category for masonry may include a Lump Sum Allowance of $5,000 for temporary heating. The bidder shall include this $5,000 allowance in its Base Bid and document actual expenditures to the Construction Manager. The bidder's contract amount will then be adjusted based on actual usage.

D. Allowance usage Change Orders shall not include mark ups when being utilized. **Mark up to be included in Base Bid number.**

G. MATERIAL ALLOWANCES

A. The allowance itself shall include the cost of purchasing the specified materials only, including sales and use tax if applicable. The cost of labor (and/or erection), overhead, profit, tools, equipment, delivery, unloading, warehousing, etc. shall be included in the Base Bid and shall NOT be included in the stated allowance.

B. This type of allowance shall be adjusted by the difference of the allowed material purchase price and the actual purchase price, either additive or deductive, with no consideration given for either increased or decreased OH&P.

C. Example: A bid category for carpet may include a Material Allowance of $15.00/sy to purchase carpet. The cost for installation, tools, equipment, delivery, unloading, warehousing, overhead, profit, etc. shall be included in the Base Bid and are not part of the allowance.

D. Trade Contractor shall submit proposals to Construction Manager for materials selections by the Architect. After selection, Trade Contractor shall follow normal submittal procedures.

E. Trade Contractor shall note if Contract Time will be affected with any material selection.

F. Invoices shall be submitted to the Construction Manager to verify actual purchase amounts and quantities.

H. QUANTITY ALLOWANCES

A. The allowance itself is to adjust quantity only. All costs such as material, sales tax, labor (and/or erection), overhead, profit, tools, equipment, delivery, unloading, warehousing, etc. shall be included in the Base Bid.

B. This type of allowance shall be adjusted by the difference in the allowed quantity vs. the actual quantity times a unit price, which includes all material, labor, equipment, OH&P, etc.

C. Example: A bid category for steel may include a Quantity Allowance of 5 tons of misc. steel that may not be designed at the time of bidding. The bidder shall include the cost of furnishing, fabricating and installing (erecting) this 5 tons of misc. steel in the Base Bid and a unit price to adjust the bidder's contract amount if the actual quantity is different from the allowed amount.

D. Sufficient documentation to substantiate the quantity difference shall be submitted to the Construction Manager.

I. UNUSED MATERIALS

A. Return unused materials purchased under an allowance to manufacturer or supplier for credit to Owner, after installation has been completed and accepted.

1. If requested by Architect, retain and prepare unused material for storage by Owner. Deliver unused material to Owner's storage space as directed.

PART 2 - SCHEDULE OF ALLOWANCES

2.1 TC-11 $100,000

END OF SECTION 01 21 00

SECTION 01 22 00 - UNIT PRICES

PART 1 - GENERAL

1.1 SUMMARY

A. Section includes administrative and procedural requirements for unit prices.

1.2 DEFINITIONS

A. Unit price is an amount proposed by Bidder, applicable during the duration of the Work, as a price per unit of measurement for materials, equipment, or services, or a portion of the Work, added to or deducted from the Contract Sum by appropriate modification, if the scope of Work or estimated quantities of Work required by the Contract Documents are increased or decreased.

B. Unit prices include all necessary material, plus cost for delivery, installation, insurance, applicable taxes, overhead, and profit.

C. Unit prices shall apply whether the Work described is performed by the Trade Contractor or by a lower-tier Trade Contractor.

1.3 PROCEDURES

A. The Construction Manager reserves the right, prior to an award of Subcontract, to evaluate the Unit Prices submitted and seek adjustment and/or reject any Unit Price that is determined by the Construction Manager to be unreasonable.

B. The Trade Contractor shall keep a daily log of actual quantities of specified work unit encountered, consumed or expended and submit copies of such logs to the Construction Manager weekly.

C. Measurement and Payment: See individual Specification Sections for work that requires establishment of unit prices. Methods of measurement and payment for unit prices are specified in those Sections.

PART 2 - SCHEDULE OF UNIT PRICES

2.1 None

END OF SECTION 01 22 00

SECTION 01 23 00 - ALTERNATES

PART 1 - GENERAL

1.1 SUMMARY

A. Section includes administrative and procedural requirements for alternates.

1.2 DEFINITIONS

A. Alternate: An amount proposed by bidders and stated on the Bid Form for certain work defined in the bidding requirements that may be added to or deducted from the base bid amount if Owner decides to accept a corresponding change either in the amount of construction to be completed or in the products, materials, equipment, systems, or installation methods described in the Contract Documents.

B. Alternates described in this Section are part of the Work only if enumerated in the Agreement.

C. The cost or credit for each alternate is the net addition to or deduction from the Contract Sum to incorporate alternate into the Work. No other adjustments are made to the Contract Sum.

D. Work not specifically identified or reasonably inferable as being part of an Alternate shall be considered as being in the base scope of the project.

E. Unless otherwise indicated, each Alternate shall be considered to include all costs necessitated by its acceptance, including, but not limited to labor, material, delivery, storage, handling, supervision, tools, equipment, taxes, compliance with Division 1 General Requirements, and construction facilities and administration associated with the Alternate.

F. The Subcontractor shall fully investigate each proposed Alternate and understand each Alternate's effect on the overall Work. Work which, by virtue of acceptance of the Alternate, will be necessary in order to provide a complete and proper installation shall be considered as being part of that Alternate, whether indicated or not. Likewise, work, which is made unnecessary by acceptance of the Alternate, shall be considered as being deducted from the base Work, even if not specifically indicated as such.

1.3 PROCEDURES

A. Coordination: Revise or adjust affected adjacent work as necessary to completely integrate work of the alternate into Project.

1. Include as part of each alternate, miscellaneous devices, accessory objects, and similar items incidental to or required for a complete installation whether or not indicated as part of alternate.

B. Notification: Immediately following award of the Trade Contractor's Subcontract, notify each party involved, in writing, of the status of each alternate. Indicate if alternates have been accepted, rejected, or deferred for later consideration. Include a complete description of negotiated revisions to alternates.

C. Execute accepted alternates under the same conditions as other work of the Subcontract.

D. Schedule: A schedule of alternates is included at the end of this Section. Specification Sections referenced in schedule contain requirements for materials necessary to achieve the work described under each alternate.

PART 2 - SCHEDULE OF ALTERNATES

2.1 G.1 Add Alternate: Provide Stainless Steel panels and fins in lieu of aluminum per the specifications

END OF SECTION 01 23 00

SECTION 01 25 13 – PRODUCT SUBSTITUTION PROCEDURES

PART 1 - GENERAL

1.1 SECTION INCLUDES

A. Product options available to Bidders and Contractors, plus procedures for securing approval of proposed substitutions.

B. Refer to Section 00 10 00.2 - Instructions to Bidders Article 3.3 SUBSTITUTIONS, as amended and modified.

1.2 QUALITY ASSURANCE

A. The materials, products and equipment described in the Bidding Documents establish a standard of required function, dimension, appearance, and quality to be met by any proposed substitution.

B. All bids shall be based upon specified standards or approved substitutes.

C. Where proprietary products or types of construction are used in Specifications, the first named in any grouping is the one used as the basis of design. Use of a second, third, or approved substitution shall not relieve Contractor of the responsibility of investigating the effect these products will have on the Work.

D. Include all costs in bid to accommodate the product to be provided.

1.3 PRODUCT OPTIONS

A. Contract is based on standards of quality established in Contract Documents.
   1. In agreeing to the terms and conditions of Contract, Contractor has accepted a responsibility to verify that specified products will be available and to place orders for all required materials in such a timely manner as is needed to meet his agreed construction schedule.
   2. Neither Owner nor Architect has agreed to substitution of materials or methods called for in Contract Documents, except as they may specifically otherwise state in writing.

B. Where materials and/or methods are specified by name and/or model number, followed by the words "or approved equal”:
   1. Material and/or method specified by name establishes the required standard of quality.
   2. Materials and/or methods proposed by Contractor to be used in lieu of materials and/or methods so specified by name shall in all ways equal or exceed qualities of the named materials and/or methods.

C. Where the phrase "or equal," or "or approved equal" occurs in Contract Documents, do not assume that materials, equipment, or methods will be approved as equal unless the item has been specifically approved for this Work by the Owner in consultation with the Architect.

1.4 SUBSTITUTIONS

A. Any bidder desiring to use a material, product, equipment, or type of construction not named in Contract Documents shall comply with Section 00 10 00.2 - Instructions to Bidders Article 3.3 SUBSTITUTIONS.

B. Substitution requests submitted to Construction Manager for approval must be accompanied by such supporting evidence as the Architect may require, such as samples, drawings, specifications, and test reports, giving full and complete information. In all cases, the Owner's decision shall be final and binding on all concerned.

C. Approval of substitutions shall be announced by the Construction Manager as described in Section 00 10 00.2 - Instructions to Bidders Article 3.3

1.5 DELAYS

A. Delays in construction arising by virtue of non-availability of a specified material and/or method will not be considered by the Owner as justifying an extension of Contract Time.

PART 2 - PRODUCTS

Not Used.

PART 3 - EXECUTION

Not Used.

END OF SECTION 01 25 13

DIVISION 01 – GENERAL CONDITIONS
SECTION 01 25 13
PRODUCT SUBSTITUTION PROCEDURES

PART 1 - GENERAL

1.1 SECTION INCLUDES

A. Procedures governing requests for substitution of specified products, materials, equipment, and systems

B. Requirements for evaluation, documentation, and approval of proposed substitutions

1.2 QUALITY ASSURANCE

A. Products specified in the Contract Documents establish the minimum acceptable standard of quality, function, performance, appearance, durability, and coordination.

B. Bids shall be based on specified products or systems. Approval of a substitution is not implied by the use of the phrase “or approve equal.”

C. Where proprietary products or types of construction are used in Specifications, the first named in any grouping is the one used as the basis of design. Use of a second, third, or approved substitution shall not relieve Contractor of the responsibility of investigating the effect these products will have on the Work.
   1. Compliance with the Contract Documents
   2. Coordination with adjacent work
   3. compliance with applicable codes and accessibility requirements

D. Include all costs in bid in order to accommodate the product to be provided.

1.3 PRODUCT OPTIONS

A. Contract is based on standards of quality established in Contract Documents.

   1. In agreeing to the terms and conditions of Contract, Contractor has accepted a responsibility to verify that specified products will be available and to place orders for all required materials in such a timely manner as is needed to meet his agreed construction schedule.
   2. Neither Owner nor Architect has agreed to substitution of materials or methods called for in Contract Documents, except as they may specifically otherwise state in writing by Addendum or Change Order.

B. Where materials and/or methods are specified by name and/or model number, followed by the words "or approved equal”:

1. Material and/or method specified by name establishes the required standard of quality.
2. Materials and/or methods proposed by Contractor to be used in lieu of materials and/or methods so specified by name shall in all ways equal or exceed qualities of the named materials and/or methods.

C. Where the phrase "or equal," or "or approved equal" occurs in Contract Documents, do not assume that materials, equipment, or methods will be approved as equal unless the item has been specifically so approved for this Work by the Owner in consultation with the Architect.

1.4 SUBSTITUTION

A. Substitution requests shall be submitted in writing to the Construction Manager and Architect no later than ten (10) calendar days prior to the bid date.

B. Substitution requests submitted after this deadline will not be considered.

C. Each Substitution request shall include, at minimum:
1. Detailed product data and specifications
2. Independent test reports demonstrating compliance with specified performance criteria
3. Drawings indicating impacts on dimensions, clearances, and interfaces
4. Written confirmation that no revisions to drawings or specification are required

D. Substitution requests that: require redesign, transfer coordination responsibility to the Architect, require changes to other trades will be rejected without further review.

E. Approval of a substitution shall be issued only by written Addendum.

1.5 SPECIFIC LIMITATIONS

A. Toilet Compartments: Systems utilizing phenolic, HDPE, Plastic Laminate, or painted (non-Powder-coated) steel are not acceptable.

B. Epoxy Flooring: Single-coated, roll-applied, paint-like, or “epoxy-like” systems are not acceptable.

1.6 Acoustical Ceiling Tile: ACT systems not rated for high-Humidity environments or requiring changes to grid spacing, suspension systems, or seismic detailing are not acceptable. DELAYS

A. Delays in construction arising by virtue of non-availability of a specified material and/or method will not be considered by the Architect as justifying an extension of Contract Time.

PART 2 - PRODUCTS (Not Used)

PART 3 - EXECUTION (Not Used)

END OF SECTION 012513

DIVISION 01 – GENERAL CONDITIONS
SECTION 01 26 00
CONTRACT MODIFICATION PROCEDURES

PART 1 - GENERAL

1.1 SUMMARY

A. Section includes administrative and procedural requirements for handling and processing Contract modifications. Contract modifications shall not modify performance requirements, quality standards, or substitution limitations established elsewhere in the Contract Documents unless explicitly approved in writing.

1.2 MINOR CHANGES IN THE WORK

A. Architect will issue supplemental instructions authorizing minor changes in the Work, not involving adjustment to the Contract Sum or the Contract Time, on AIA Document G710. Minor changes shall not affect scope, quality, performance, appearance, or durability of the Work.

1. Work Change Proposal Requests issued by Architect are not instructions either to stop work in progress or to execute the proposed change.

1.3 PROPOSAL REQUESTS

A. Owner-Initiated Proposal Requests: Architect will issue a detailed description of proposed changes in the Work that may require adjustment to the Contract Sum or the Contract Time. If necessary, the description will include supplemental or revised Drawings and Specifications.

1. Work Change Proposal Requests issued by Architect are not instructions either to stop work in progress or to execute the proposed change.
2. Within 20 days, when not otherwise specified, after receipt of Proposal Request, submit a quotation estimating cost adjustments to the Contract Sum and the Contract Time necessary to execute the change.

    a. Include a list of quantities of products required or eliminated and unit costs, for labor and material, with total amount of purchases and credits to be made. Supplier quotes for material shall also be included. If requested, furnish survey data to substantiate quantities.
    b. Indicate applicable taxes, delivery charges, equipment rental, and amounts of trade discounts.
    c. Include costs of labor and supervision directly attributable to the change.
    d. Include an updated Contractor's construction schedule that indicates the effect of the change, including, but not limited to, changes in activity duration, start and finish times, and activity relationship. Use available total float before requesting an extension of the Contract Time. Do not include time impacts that could be mitigated through resequencing or use of available float.

B. Contractor-Initiated Proposals shall not be based on conditions that were reasonably inferable from the Contract Documents or existing conditions

C. : If latent or changed conditions require modifications to the Contract, Contractor may initiate a claim by submitting a request for a change to Architect.

1. Include a statement outlining reasons for the change and the effect of the change on the Work. Provide a complete description of the proposed change. Indicate the effect of the proposed change on the Contract Sum and the Contract Time.
2. Include a list of quantities of products required or eliminated and unit costs, with total amount of purchases and credits to be made. If requested, furnish survey data to substantiate quantities.
3. Indicate applicable taxes, delivery charges, equipment rental, and amounts of trade discounts.
4. Include costs of labor and supervision directly attributable to the change.
5. Include an updated Contractor's construction schedule that indicates the effect of the change, including, but not limited to, changes in activity duration, start and finish times, and activity relationship. Use available total float before requesting an extension of the Contract Time.
6. Comply with requirements in Section 012500 "Substitution Procedures" if the proposed change requires substitution of one product or system for product or system specified.

1.4 ADMINISTRATIVE CHANGE ORDERS

A. Allowance Adjustment: See Section 012100 "Allowances" for administrative procedures for preparation of Change Order Proposal for adjusting the Contract Sum to reflect actual costs of allowances.

B. Unit-Price Adjustment: See Section 012200 "Unit Prices" for administrative procedures for preparation of Change Order Proposal for adjusting the Contract Sum to reflect measured scope of unit-price work.

1.5 CHANGE ORDER PROCEDURES

A. On Owner's approval of a Work Change Proposal Request, Architect will issue a Change Order for signatures of Owner and Contractor on AIA Document G701.

B. Do not proceed with changed Work until a fully executed Change Order or Construction Change Directive has been issued, unless directed otherwise in writing by the Architect.

1.6 CONSTRUCTION CHANGE DIRECTIVE

A. Construction Change Directive: Architect may issue a Construction Change Directive on AIA Document G714. Construction Change Directive instructs Contractor to proceed with a change in the Work, for subsequent inclusion in a Change Order.

1. Construction Change Directive contains a complete description of change in the Work. It also designates method to be followed to determine change in the Contract Sum or the Contract Time.

B. Documentation: Maintain detailed records on a time and material basis of work required by the Construction Change Directive. Maintain daily records subject to review by the Architect and Owner. Failure to maintain adequate documentation may result in rejection of claimed costs.

1. After completion of change, submit an itemized account and supporting data necessary to substantiate cost and time adjustments to the Contract.

PART 2 - PRODUCTS (Not Used)

PART 3 - EXECUTION (Not Used)

END OF SECTION 012600

SECTION 01 31 00 – PROJECT COORDINATION

PART 1 - GENERAL

1.1 SUMMARY

A. Administrative and supervisory requirements necessary for coordination of Work on the Project include, but are not limited to:
   1. Contractor responsibilities.
   2. Subcontractor responsibilities.
   3. Mutual responsibilities.
   4. Review of Contract Documents and existing job conditions.
   5. Supervision and construction procedures.
   6. Labor and materials.

1.2 CONTRACTOR RESPONSIBILITIES

A. Schedule and coordinate the Work in conformance with the starting and sequencing times, and the Total Contract Time defined in the Construction Documents.

B. Before starting work at the Project Site, before shop drawing preparation and submission, and before purchasing or fabricating materials that are affected by field conditions, inspect the conditions affecting the Work and take all necessary field measurements.

C. Before fabricating materials or products, examine the Construction Documents for adjacent and related work.

D. Notify the Construction Manager in writing of work conditions shown or specified that are unsatisfactory for the proper installation and subsequent performance of the Work; or that are not in accordance with the product manufacturer's or fabricator's specifications, requirements, or recommendations. Do not proceed with the Work until conditions are correct.

1.3 SUBCONTRACTOR RESPONSIBILITIES

A. Before starting work at the Project Site, before shop drawing preparation and submission, and before purchasing or fabricating materials that are affected by field conditions, inspect the conditions affecting the Work and take all necessary field measurements.

B. Before fabricating materials or products, examine the Construction Documents for adjacent and related work.

C. Notify the Contractor in writing of work conditions shown or specified that are unsatisfactory for the proper installation and subsequent performance of the Work; or that are not in accordance with the product manufacturer's or fabricator's specifications, requirements, or recommendations. Do not proceed with the Work until conditions are correct.

D. Abide by the Project Schedule and coordination requests made by the Contractor.

1.4 MUTUAL RESPONSIBILITIES

A. Supply other Contractors with necessary dimensions and shop drawings where required for the coordination of the Work. Additional cost caused to a Contractor or to the Owner due to ill-timed or defective work or the failure to perform work is the responsibility of the Contractor that caused the additional cost.

B. Move stored materials that interfere with the operations of the Owner or other Contractors.

C. Coordinate and cooperate with other Contractors to achieve intended execution of each Specification Section where Work of one Section affects Work of other Sections. Do not install successive Work until conditions are inspected and found satisfactory for installation of successive Work. Installation of successive Work is prima–facie evidence that the Contractor installing the successive work accepts the installation conditions. Performance of successive Work is the responsibility of Contractor that performs the successive work.

D. Comply with safety codes and regulations applicable to the performance of the Contract. Owner, Architect, and Construction Manager are not liable for observing, checking, instructing, and giving directions relating to Contractor's safety procedures. Owner, Architect, and Construction Manager do not review the adequacy of Contractor's safety measures in, on, or near construction site.

E. Owner's field representative, Architect, and Construction Manager do not have the authority to verbally order or approve modifications to the Work. Authorization must be in writing, signed by the Owner's authorized representative, or by Change Order.

1.5 REVIEW OF CONSTRUCTION DOCUMENTS

A. Conform to requirements of the Construction Documents. If conflicts are found between Drawings, between Specifications, or between Drawings and Specifications, include the most costly material, method, or detail in Contractor’s Bid and in the Contract.

B. If physical discrepancies are discovered between the actual conditions and those represented by the Construction Documents, report them immediately to the Construction Manager. Do not proceed with the Work, except at risk, until receiving written instructions.

1.6 SUPERVISION AND CONSTRUCTION PROCEDURES

A. Where laws, codes, or standards require supervision or inspection of portions of the Work by an architect, engineer, or other competent or qualified person, furnish the necessary supervision and inspection to the satisfaction of the governing authority.

B. Obtain permission from the Construction Manager before performing work at times other than is allowed by the Construction Documents.

C. Project meetings will be held at Construction Manager's field office.

D. Owner reserves the right to hold additional job progress meetings at the Owner's discretion. Construction Manager reserves the right to hold additional job progress meetings at the Construction Manager's discretion. Contractor will be given 48 hours notice (when possible) before unscheduled meetings.

E. Oral assistance, advice, and interpretations given by the Owner, Architect, or Construction Manager relative to construction means, methods, techniques, sequences, procedures, safety precautions, or programs is a gratuitous service and is not binding. Non–contractual assistance does not make the Owner, rchitect, or Construction Manager responsible for the items.

F. Owner will endeavor to observe the Work, but omissions and failures to provide proper material and failure to perform work correctly are the responsibility of the Contractor. Contractor, not the Owner, is responsible for determining that work under the Contract, as it proceeds and is completed, is performed in accordance with the Construction Documents and governing regulations.

1.7 LABOR AND MATERIALS

A. Provide products in accordance with the current printed specifications, requirements, and recommendations of the products' manufacturers and fabricators. Should the Construction Documents show or specify the application of a product not conforming to the manufacturer's or fabricator's printed specifications, requirements, or recommendations, notify the Construction Manager in writing.

B. The minimum, acceptable standards for products and workmanship on this project shall comply with industry standards, recognized standards of good quality, and published standards of recognized National Trade Associations. Use products which are new, sound, and of the quality suitable for their application. Orderly position products and align them with the building structure. Make vertical components plumb and horizontal components level, with surface true to line, grade, and dimension. Make joinery and connections accurate, close fitting, and well made.

C. Workers employed on the Project shall work together in harmony, and workers newly assigned to the Project shall cooperate and work harmoniously with work forces on the site, including work forces of the Owner, if any. Upon written notice by the Owner or Construction Manager, Contractor shall remove workers not complying with the provisions of the Contract Documents.

D. Arrange and establish a location satisfactory to the Construction Manager where the workers may eat. Provide a rubbish container, and clean and remove debris at the end of each working day.

PART 2 - PRODUCTS

Not Used.

PART 3 - EXECUTION

Not Used.

END OF SECTION 01 25 13

SECTION 01 31 19 - PROJECT MEETINGS

PART 1 - MEETING TYPES

1.1 General

A. The Construction Manager will provide a location for meetings and conferences at Project site, unless otherwise indicated.

1. Attendees: Owner, Construction Manager, Trade Contractors, Architect/Engineer and other individuals whose presence is required, as determined by the Construction Manager.
2. Agenda: Construction Manager will prepare the meeting agenda and distribute to all invited attendees.
3. Meeting Memoranda: Construction Manager will conduct the meeting and record significant discussions and agreements achieved and distribute the meeting minutes to everyone concerned.

1.2 Reverse Phase Schedules: Construction Manager will conduct a Reverse Phase Schedule (RPS) Meeting approximately two weeks after NTP or contract.

1. Contractors are responsible for picking up a colored RPS Post-Its and complete with contractor's activities, durations, locations, and crew size for each planned activity in the contractor's scope.

2. Agenda: Review Project Schedule with all Trade Contractors on project. Start from the project's end date and work backward to determine the latest possible start dates for each task, using the color-coded Post-Its to sequence activities effectively.

a. Project Milestones

b. Break Down Activities

c. Sequence Activities

d. Identify Constraints

e. Assign Responsibilities

f. Monitor and Adjust in Weekly Work Plans

1.3 Preconstruction Conference

A. Construction Manager will schedule a preconstruction conference before construction starts, at a time convenient to Owner, Construction Manager, and Architect/Engineer. Conference will be at Project site or another convenient location. Construction Manager will review responsibilities and personnel assignments.

B. Attendees: Authorized representatives of Owner, Construction Manager, Architect/Engineer, and their consultants; Trade Contractors and their superintendents; major Trade Contractors; suppliers; and other concerned parties shall attend the conference. All participants at the conference shall be familiar with Project and authorized to conclude matters relating to the Work.

C. Agenda: Discuss items of significance that could affect progress, including the following:

1. Tentative construction schedule.
2. Phasing.
3. Critical work sequencing and long-lead items.
4. Designation of key personnel and their duties.
5. Procedures for processing field decisions and Change Orders.
6. Procedures for requests for interpretations (RFIs).
7. Procedures for testing and inspecting.
8. Procedures for processing Applications for Payment.
9. Submittal procedures.
10. Sustainability requirements
11. Preparation of Record Documents.
12. Use of the premises and existing building.
13. Work restrictions.
14. Owner's occupancy requirements.
15. Responsibility for temporary facilities and controls.
16. Construction waste management and recycling.
17. Parking availability.
18. Office, work, and storage areas.
19. Equipment deliveries and priorities.
20. Security.
21. Progress cleaning.
22. Working hours.

D. Meeting Memoranda: Construction Manager will record and distribute meeting memoranda.

1.4 Pre-installation Conferences

A. Construction Manager will conduct a pre-installation conference at Project site before each construction activity that requires coordination with other construction.

B. Attendees: Construction Manager, Architect/Engineer, Installer and representatives of manufacturers and fabricators involved in or affected by the installation and its coordination or integration with other materials and installations that have preceded or will follow, shall attend the meeting. The specifications additionally identify Suppliers and/or Trade Contractors that are required to attend a pre-installation conference.

C. Agenda: Review progress of other construction activities and preparations for the particular activity under consideration, including requirements for the following:

1. The Contract Documents.
2. Options.
3. Related requests for interpretations (RFIs).

4. Related Change Orders.
5. Purchases.
6. Deliveries.
7. Submittals.
8. Review of mockups.
9. Possible conflicts.
10. Compatibility problems.
11. Time schedules.
12. Weather limitations.
13. Manufacturer's written recommendations.
14. Warranty requirements.
15. Compatibility of materials.
16. Acceptability of substrates.
17. Temporary facilities and controls.
18. Space and access limitations.
19. Regulations of authorities having jurisdiction.
20. Testing and inspecting requirements.
21. Installation procedures.
22. Coordination with other work.
23. Required performance results.
24. Protection of adjacent work.
25. Protection of construction and personnel.
26. Construction waste management and recycling

D. The Construction Manager will record significant conference discussions, agreements, and disagreements, including required corrective measures and actions.

E. The Construction Manager will distribute minutes of the meeting to each party present and to parties who should have been present, Architect/Engineer, and Owner.

F. Do not proceed with installation if the conference cannot be successfully concluded. Initiate whatever actions are necessary to resolve impediments to performance of the Work and reconvene the conference at earliest feasible date.

1.5 Progress (Weekly Work Plan) Meetings: Construction Manager will conduct progress meetings at weekly intervals. Purpose of meetings is to coordinate work efforts among the participating Trade Contractors.

A. Attendees: Construction Manager, each Trade Contractor, supplier, and other entity concerned with current progress or involved in planning, coordination, or performance of future activities shall be represented at these meetings. All participants at the conference shall be familiar with Project and authorized to conclude matters relating to the Work.

B. Agenda: Review other items of significance that could affect progress. Include topics for discussion as appropriate to status of Project.

1. Schedule: Review progress since the last meeting. Determine whether each activity is on time, ahead of schedule, or behind schedule, in relation to the 6-week look ahead and Reverse Phase Schedules. Determine how construction behind schedule will be expedited;

secure commitments from parties involved to do so. Discuss whether schedule revisions are required to ensure that current and subsequent activities will be completed within the Contract Time. Review schedule for next period.

2. Review present and future needs of each entity present, including the following:

   a. Interface requirements.
   b. Sequence of operations.
   c. Status of submittals.
   d. Deliveries.
   e. Off-site fabrication.
   f. Access.
   g. Site utilization.
   h. Temporary facilities and controls.
   i. Work hours.
   j. Hazards and risks.
   k. Progress cleaning.
   l. Quality and work standards.
   m. Status of correction of deficient items.
   n. Field observations.
   o. Requests for interpretations (RFIs).
   p. Status of proposal requests.
   q. Pending changes.
   r. Status of Change Orders.
   s. Pending claims and disputes.
   t. Documentation of information for payment requests.
   u. Waste management implementation and progress.

3. Minutes: Construction Manager will record and distribute to all Trade Contractors the meeting memoranda.
4. Reporting: Distribute meeting memoranda of the meeting to each party present and to parties who should have been present.
5. Schedule Updating: Construction Manager will revise the Reverse Phase & 6-week look ahead Schedules after each progress meeting where revisions to the schedule have been made or recognized.

END OF SECTION 01 31 19

SECTION 01 32 16 - CONSTRUCTION PROGRESS SCHEDULE

PART 1 - GENERAL

1.1 Trade Construction Manager shall in conjunction with the Construction Manager develop an accurate schedule for the completion of the work. The Construction Manager will utilize Lean Construction / Last Planner methods to manage the project. Each Trade Contractor will be required to participate in a detailed schedule planning session for each phase of the project. A detailed schedule will be developed for each phase. The detailed schedules shall be consistent with the Milestone Construction Schedule issued with the bidding documents. Each Trade Contractor will be required to attend the weekly Progress Meeting prepared with a weekly work plan for the coming week and a review of work activities required by the detailed schedule for that Trade Contractor over the next six weeks. In addition, each Trade Contractor will attend brief daily meetings.

1.2 **See Section 01 32 16 – Construction Progress Scheduling** for the Milestone Construction Schedule used for bidding.

PART 2 - LEAN CONSTRUCTION SCHEDULING METHODS

2.1 Overview:

A. Lean Construction is a tool to manage schedules and production on projects. By planning and managing the work, uncertainty is removed from the project. When production planning becomes reliable and people fulfill their commitments, performance and workflow are improved, and so are the overall results of the project.

B. Lean Construction traces its roots to the Toyota Production System developed after World War II. The system aimed to eliminate the inventory and rework of traditional mass production in favor of a reliable production system that could both work and change quickly to meet a customer's specific requirements without wasteful processes. In mass production, as in traditional construction processes, the project is a series of activities, and the goal is to reduce cost and increase the speed of each activity with consistent high quality.

2.2 Application

A. Lean Construction involves a systematic approach aiming for more efficient overall workflow. It attempts to understand how value is delivered, making workflow as consistent and reliable as possible, and then reviewing the results to determine how to improve the planning process. Lean differs from traditional construction methods because it decentralizes hierarchical decision-making. With Lean Construction, those closest to the work (the "Last Planners") must have the authority to make the decisions and plan the work. It also utilizes peer pressure to get the job

done. Trade Contractors agree as a group to meet their deadlines, and each is held accountable not only to the Construction Manager but also to fellow Trade Contractors.

B. The project will utilize key procedures in the implementation of Lean Construction / Last Planner Methods. These steps require the input of the Foremen for the Trade Contractors that will perform the work. These steps are as follows:

1. Flow Planning – This schedule is created to fit within the parameters of the Milestone Construction Schedule. Trade Contractors work together to determine the work areas, sequence of work, and Takt time for the project. This ensures that the overall work flow of the project is optimized.
2. Reverse Phase Scheduling (RPS) – This process is used in lieu and/or in addition to Flow Planning. Similar to Flow Planning, this schedule is created to fit within the parameters of the Milestone Construction Schedule. Trade Contractors plan the project starting with the last work activity and working backwards. This ensures that all Trade Contractors consider what work must be done prior to any schedule activity and adequate durations are in place for late activities. This RPS is thought of as "What Should Be Done."
3. Rolling Six-Week Look Ahead Schedules – Upcoming schedule activities move onto the Six-Week Look Ahead Schedules on a weekly basis. All possible constraints for preventing these activities are identified. This six-week look ahead is the work that "Can Be Done" in the next six-week period.
4. Weekly Work Plans (WWP) – These plans are brought to weekly Progress Meetings by all Trade Contractor foremen and are specific to the work they "Will Be Doing" in the upcoming week. In order for work activities to be on the WWP, there cannot be any known constraints that would prevent the work from occurring.
5. Plan of Day (POD) – These brief daily meetings evaluate daily performance against key activities identified and coordinated in the WWP. By understanding daily performance, Trade Contractor foremen quickly identify barriers and then make minor adjustments to eliminate the barriers allowing work to proceed as planned.

2.3 Implementation

A. Trade Contractors will be involved with all Flow Planning and Reverse Phase Scheduling for the project. Bidders should include the cost for foremen and project managers from each company to attend ½ day planning sessions to establish these schedules as required for the complexity of the project.

B. The Construction Manager will provide and update the Six-Week Look Ahead Schedules from information developed in the Flow Planning and Reverse Phase Scheduling process and from Trade Contractors input. The Construction Manager and Trade Contractors will review and discuss the Six-Week Look Ahead Schedules at the weekly Progress Meetings.

C. Each Trade Contractor must complete a Weekly Work Plan (WWP) and provide to the Construction Manager by noon the day before the weekly Progress Meeting. Each Trade Contractor will discuss their activities at the weekly Progress Meeting.

D. All Trade Contractor foremen are required to attend the daily POD.

E. Trade Contractors will be required to inform the Construction Manager, on a daily basis, the status of the work that was committed to be complete.

F. Additional Flow Planning and Reverse Phase Scheduling may be required to update the schedule when project changes occur. Trade Contractors will be required to participate in these planning sessions.

2.4 Updates

A. Six-Week Look-Ahead Schedules will be updated weekly.

B. Construction Progress Schedules will be updated periodically as required.

C. The Milestone Construction Schedule will be updated as required.

2.5 Distribution

A. The Construction Manager will provide the Trade Contractors access to the Milestone Construction Schedule, Construction Progress Schedules, Six-Week Look Ahead Schedules and Weekly Work Plans.

B. It is the responsibility of each Trade Contractor to inform its field personnel, sub-tier Trade Contractors and material suppliers of the Milestone Construction Schedule, Construction Progress Schedules, Six-Week Looks Ahead Schedules and Weekly Work Plans, including any updates.

2.6 Records

A. All schedules generated from Flow Planning and Reverse Phase Scheduling, and updates to the same, shall become the revised Project Schedule and shall be binding on the Trade Contractors. Each Trade Contractor shall provide necessary manpower, equipment, and material as necessary to the revised Project Schedule.

END OF SECTION 01 32 16

South Scoreboard Project

ID	Description	Days	Start	Finish
	Pre Construction			
	Bid Package 1 Previoulsy Awarded Steel & Demo	103	03/04/26A	04/30/26A
	Bid Package 2 Previoulsy Awarded Videoboard & MEP	22	03/18/26A	05/21/26A
	Bid Package 3 Previously Awarded Towercrane	24	04/03/26A	05/21/26A
	Bid Package 4 Previously Awarded Arch.	17	05/19/26A	07/16/26A
	Bid Package 5 Facade	37	10/13/26	12/02/26
	Box Columns	50	06/23/26A	09/03/26A
	Tower Crane	292	06/03/26A	07/15/27
	Demolition	35	12/28/26	02/12/27
	Steel Erection	60	02/08/27	04/30/27
	Electrical	166	10/23/26	06/11/27
	Demo/Replace Slab @Box Column	13	02/15/27	03/03/27
	Videoboard - Daktronics	55	04/12/27	06/25/27
	Video Room	61	04/09/27	07/02/27
	Facade			
1992	Support Structure Shops & Calc Development	25	12/03/26	01/06/27
1996	Perf Panel Shops & Calc Development	15	01/07/27	01/27/27
1999	KZF Review of Support Shops	10	01/07/27	01/20/27
2250	Support Structure Shop Dwg Corrections & Release for Fabrication	10	01/21/27	02/03/27
1997	KZF Review of Perf Panel Shops	10	01/28/27	02/10/27
1998	Blade Shops & Calc Development	25	01/28/27	03/03/27
2375	Support Structure Fabrication	25	02/04/27	03/10/27
2125	Perf Panel Dwg Corrections & Release for Fabrication	10	02/11/27	02/24/27
2187	Perf Panel Fabrication (Field Panels)	40	02/25/27	04/21/27
2500	KZF Review of Blade Shops	10	03/04/27	03/17/27
2750	Blade Shop Drawing Corrections & Release for Fabrication	10	03/18/27	03/31/27
2875	Blade Fabrication	50	04/01/27	06/09/27
2218	Scoreboard Structure Field Measure / As Built	5	04/09/27	04/15/27
2234	Field Measure Shop Drawing Correction / Release Edge Panels for Fab	15	04/16/27	05/06/27
46371	Structural Steel Complete w/ Towercrane	0		04/16/27
2242	Perf Panels (Edge Panels) Fabrication	15	05/07/27	05/27/27
46380	Videoboard-Daktronics complete w/ Towercrane	0		06/04/27
2937	Towercrane Available for use	0	06/07/27	
2968	Support Structure Install	15	06/07/27	06/25/27
2984	Perf Panel Install	15	06/21/27	07/09/27
2992	Blade Install (+/-350 blades @ 2 blades/hr = 5 weeks)	20	07/05/27	07/30/27
2996	Blade Lighting	15	08/02/27	08/20/27
2998	5ignage	15	08/02/27	08/20/27

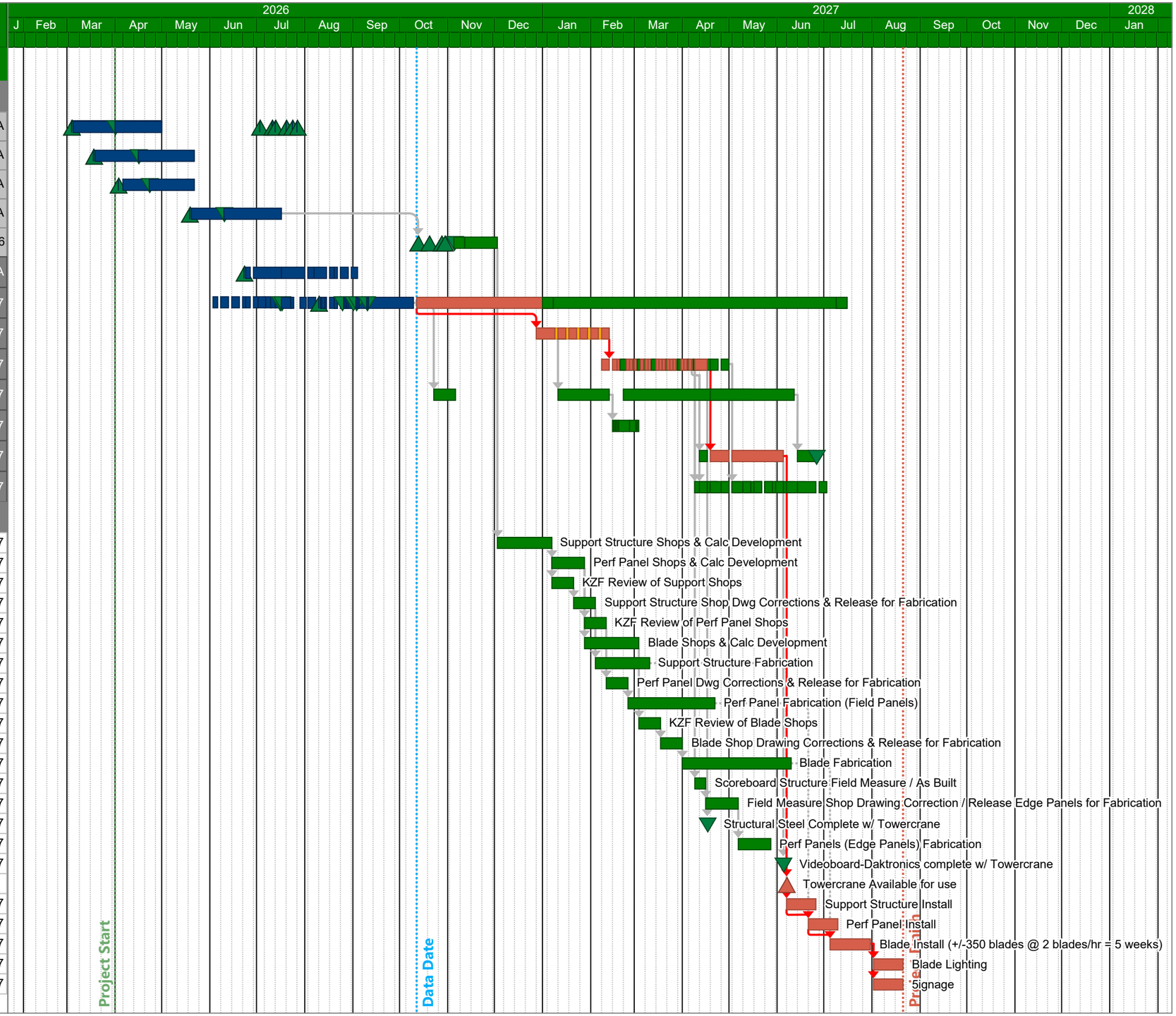

Data Date: 10/12/26

Paycor Stadium
South Scoreboard Bid Package 5 - Facade
October 13, 2026

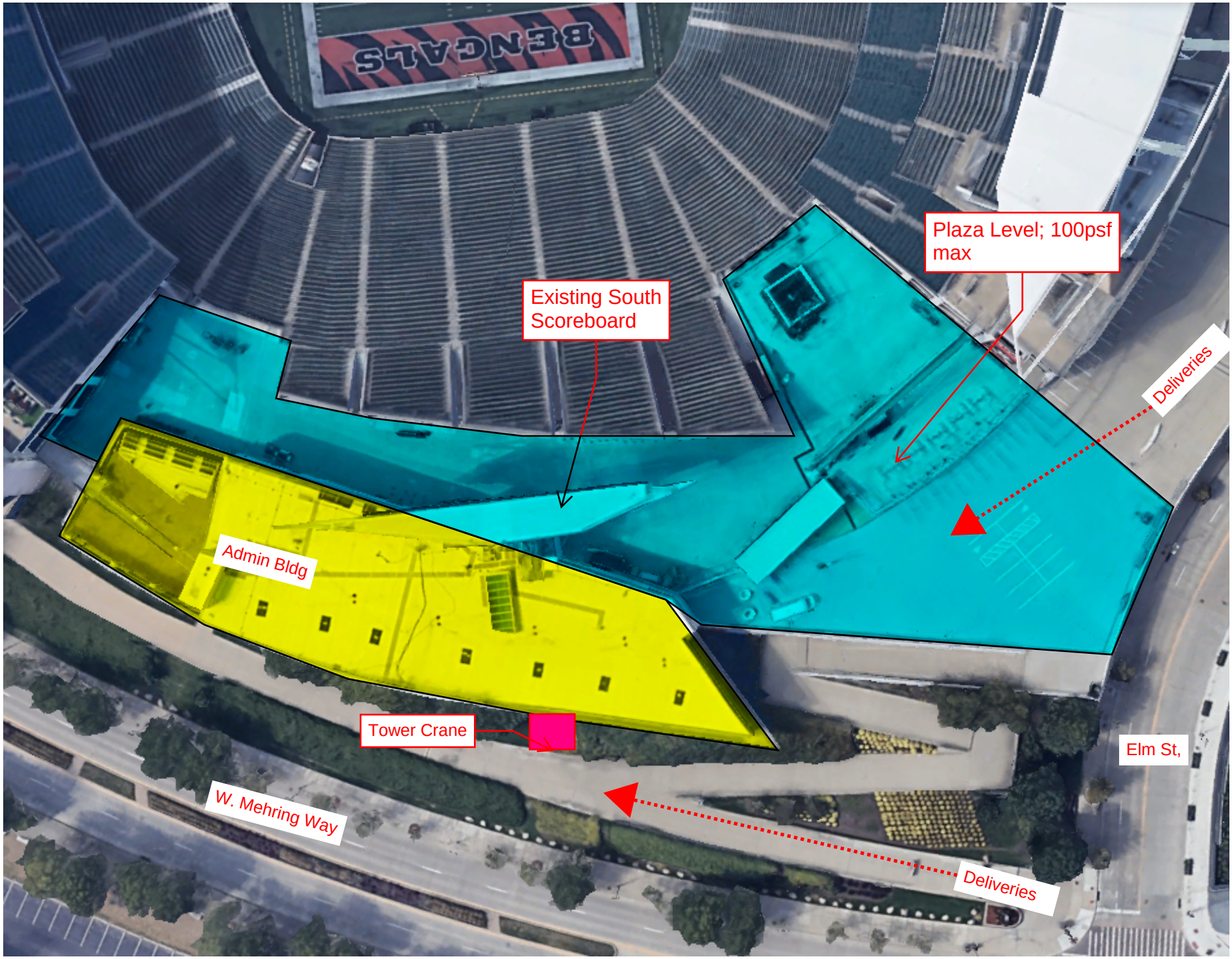

Site Logistics / Plaza Capacity Plan

RISE WITH US™

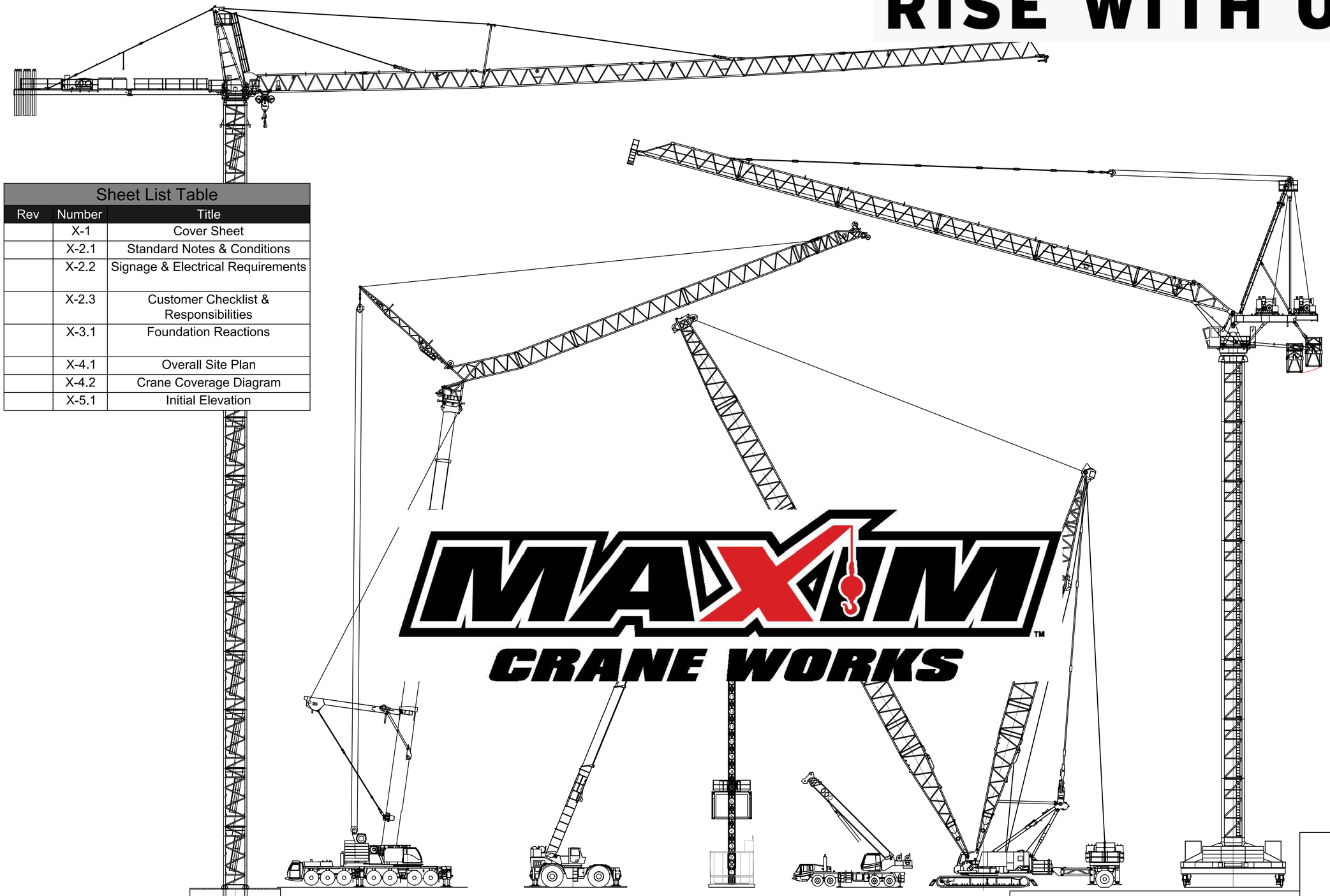

Sheet List Table		
Rev	Number	Title
	X-1	Cover Sheet
	X-2.1	Standard Notes & Conditions
	X-2.2	Signage & Electrical Requirements
	X-2.3	Customer Checklist & Responsibilities
	X-3.1	Foundation Reactions
	X-4.1	Overall Site Plan
	X-4.2	Crane Coverage Diagram
	X-5.1	Initial Elevation

MAXIM™ CRANE WORKS

FOR APPROVAL

MAXIM™ CRANE WORKS

This drawing has been prepared for the sole use of Maxim Crane Works. It is loaned to the recipient for confidential use only. Reproduction or distribution shall not be performed without the express written consent of Maxim Crane Works.

Paycor Stadium
CINCINNATI, OH
COVER SHEET

MESSER CONSTRUCTION

plot size: ANSI D (22 IN x 34 IN Inches)
plot scale: 1:1
plot date: 9/10/26
filename: X-1 COVER SHEET.DWG

REV	NOTE	DATE

Job #: 25-0834
Drw by: AH
Chk by: RN
Sheet: X-1

Contract Agreements / Change Orders

1. A copy of the "For Approval" drawing set shall be returned to Maxim Crane Works, L.P. (Maxim) by the Customer prior to erection of the crane(s) with markups and revisions noted (if any). Written acceptance of the drawings must be received prior to crane erection. Requests for changes to the drawings within 30 days of erection or after written approval shall be subject to additional charges.

2. This drawing set is loaned to the recipient for confidential use only. Reproduction or distribution is strictly prohibited without express written consent of Maxim.

Tower Crane Operations

1. In-service working conditions are restricted to wind speeds less than or equal to 45 mph per FEM 1.001 measured at the top of the crane. The permissible lifting wind speed shall be adjusted based on the load's exposed area including appropriate shape coefficients for the load being lifted. The crane load chart applies for loads whose exposed area is less than 9.8 square feet per ton of chart capacity. The permissible lifting wind speed shall be reduced for a load with an exposed wind area greater than this value. Consult the crane's Operating Manual for guidance. If wind speeds exceed 45 mph, the tower crane shall be placed out of operation and be allowed to weathervane 360 degrees in accordance with the operations manual.

2. For climbing cranes, the customer shall provide written as-built horizontal and vertical location of the centerline of the tower crane foundation within five (5) calendar days of concrete placement. The customer shall also provide the written as-built angle if the tower crane is skewed from a building grid line. For in and out of service working conditions see foundation detail drawings.

3. The customer shall verify the crane can safely operate and/or weathervane over adjacent property, existing buildings, power lines, streets, neighboring obstacles, etc. It is the customer's responsibility to obtain any required permits or easements.

4. The customer shall verify all dimensions and site conditions prior to starting work. Any deviations from this drawing set shall be brought to the immediate attention of Maxim Crane Works.

5. All hook heights are calculated from the top of the tower crane's foundation.

6. Consult the crane's operation manual for additional information necessary for safe operation of the tower crane.

7. For projects with multiple tower cranes, when slewing the upper crane, the hook block must be positioned to clear the lower crane.

8. Consult the crane's Operating Manual for the permissible working temperature.

9. Installation, operation, assembly, disassembly and maintenance shall be carried out in accordance with ASME B30.3. OSHA 1926 Subpart CC, local codes and manufacturer's requirements.

Emergency Weather Procedures

1. For a storm with a predicted wind speed greater than the design wind speed shown on the Foundation or Tie-In Detail drawings, Maxim shall be contacted for proper procedures.

2. For a storm with a predicted wind speed not anticipated to exceed the design wind speed shown on Foundation or Tie-In Detail drawings, the standard procedures outlined in the operating manual are to be followed for taking the crane out of service. A partial list of items to be completed are:

   - Check & adjust weathervane operation,
   - Remove loose items from crane upper-works,
   - Remove signage from crane,
   - Tie electrical panel doors shut,
   - Check Counterweight security bars (if equipped),
   - Locate trolley to innermost position secured against stops,
   - Hook block assembly to be raised to uppermost position,
   - All rigging to be removed,
   - Check all tower connection bolts,
   - Check tie-in collars and ties,
   - Secure power cable at each tower section; and
   - Shut off power at base.

3. Once the storm has passed and prior to re-energizing, the crane shall be inspected by the operator. The following steps are to be performed:

   - Inspect foundation bolts,
   - Inspect tower sections and mounting bolts,
   - Check power cable connections,
   - Check motors and panels for water accumulation,
   - Energize the crane; and
   - Check functions and safeties for proper operation.

Added Wind Area (Signs)

Added wind area (signage) must not affect the safe operation of the tower crane. If the operator is not able to safely control the crane for its normal intended operation, then the signage shall be removed. Additional surfaces exposed to the wind on the crane's structure may effect its stability. The creation of additional surfaces exposed to the wind on the counter-jib can prevent the crane from turning into the wind properly when it is out of service, or affect the crane's proper operation when in use. If a sign is to be placed on the crane, without the calculation of additional crane structural stresses, the guidelines below and those shown on Drawing X-3.1 shall be followed. Signs to be mounted hanging below the counterjib of the crane shall be approved by the manufacturer. Signs are not permitted on MR type cranes.

1. Signs may be attached to any existing solid surface on the crane such as a counterweight provided the sign is not larger than the solid surface.
2. Signs constructed of solid wood, metal, or similar materials are not permitted.

If a sign is to be placed on the Wolffkran, without the calculation of additional crane structural stresses, the following guidelines shall be followed:

1. Signs must be no larger than a 6'-0" wide x 11'-0" tall banner.
2. One sign may be located each side of the counterweights. Attach the sign to the advertising plate provided.

Electrical Requirements

1. The customer shall ensure power is available at the tower crane base prior to the scheduled erection date. The tower crane can not be erected without power.

2. A fused disconnect shall be provided at the base of the tower crane for power supply. Surge diverters may be installed at the site junction boxes to protect electrical equipment on the site.

3. Tower must be grounded prior to erecting the tower crane by linking to a grounding rod with a grounding conductor in accordance with local building codes. It is recommended the grounding rod consist of a minimum of $\frac{3}{4}$" diameter galvanized steel or copper rod driven a minimum of 8'-0" into the ground. It is recommended the grounding conductor be a minimum of 1 $\frac{13}{16}$" wide and $\frac{1}{8}$" thick galvanized steel strip or a minimum AWG #4 copper cable. The grounding conductor shall be attached to the base tower section using a NEC approved clamp system. Do not drill or weld to the tower mast structure.

4. Provide 3 Phase, 60 Hz power supply plus ground. Provide 480 volts phase to phase, 277 volts each phase to ground, with 120º phase shift between phases.

5. The use of open delta transformers is prohibited.

6. Amperage requirements for the crane(s) may be found on Drawings X-2.2.

WARNING: Electrical installation and connection work must be completed by qualified persons, and must comply with all relevant local, state or provincial, and federal rules, regulations and codes. The tower crane's electrical system must be properly grounded prior to erecting the tower crane in order to protect personnel from danger of electrical shock. Failure to follow these instructions is dangerous and could lead to an accident resulting in property damage, serious injury or loss of life.

FOR APPROVAL

MAXIM CRANE WORKS

This drawing has been prepared for the sole use of Maxim Crane Works. It is loaned to the recipient for confidential use only. Reproduction or distribution shall not be performed without the express written consent of Maxim Crane Works.

Paycor Stadium
CINCINNATI, OH
STANDARD NOTES & CONDITIONS

MESSER CONSTRUCTION

REV	NOTE	DATE

Job #: 25-0834
Drw by: AH
Chk by: RN
Sheet: X-2.1

plot scale: 1:1
plot size: ANSI D (22 IN x 34 IN Inches)
filename: X-2.1 STANDARD NOTES & CONDITIONS.DWG
rel date: 8/10/26

Signage Notes:

1. Solid signs shall NOT to be attached to handrailing, unless authorized by the manufacturer.
2. The bottom of the installed sign shall NOT hang below the counterjib structural member. No welding or mechanical fasteners are permitted on structural member.
3. The permissible signage area is jib length dependent.
4. Maximum allowable area shown for single sign on one side of the counterjib. Maximum area shown is based off maximum allowable sign height.
5. Fixing of the advertising sign is the responsibility of the customer. Unless otherwise noted, the attachment plate(s) will be provided and installed by Maxim if the crane is not equipped with them already.
6. OSHA 1926-1435(c) - The size and location of signs installed on tower cranes must be in accordance with manufacturer specifications.
7. All signage specifications must be in accordance with SC&RA Tower Crane Signage Guidelines.

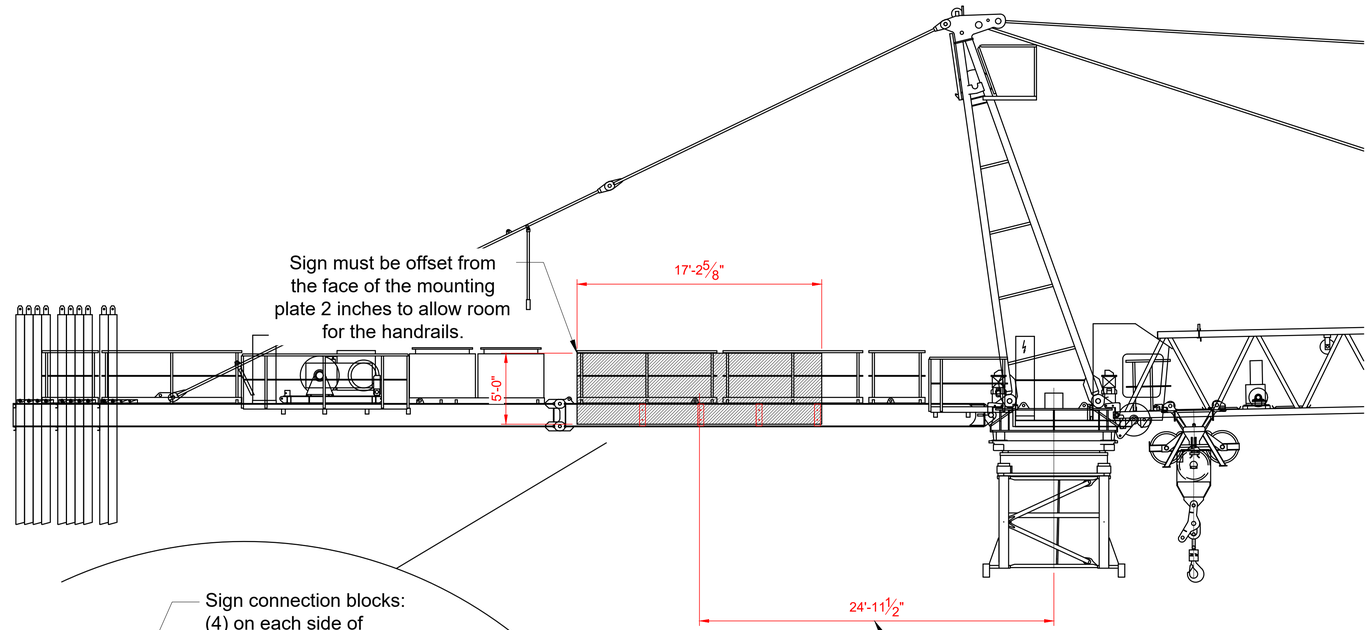

*If signage is desired, notify Maxim so the installation of the attachment plates can be coordinated or confirmed.

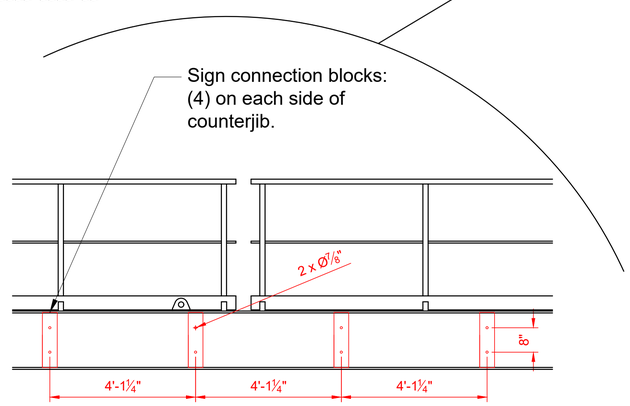

SK575

Jib Length: 197'

Electrical Notes:

1. Customer to provide an electrician for erecting the crane. Electrician to connect the crane's power cable to the fused disconnect box.
2. Provide labor and materials to install any desired lighting for the mast, jib and/or lighted signage. Provide a disconnect with a dedicated breaker between the lights and the crane electrical panel. Maxim's tower technician will show the electrician where the disconnect can be installed. All lighting and signage details shall be provided for review at least 7 days prior to erection of the crane. Voltage supply for lighting or signage will be 480 VAC. If a lower voltage supply is required, a transformer with electrical protection in addition to the fused disconnect or disconnect with a breaker for the signage and/or lights will be required by Others.
3. Provide power for the crane stubbed up with a fused disconnect located just outside the foundation. Electrical conduit shall not penetrate the tower crane foundation unless it is included in the design.

POWER REQUIREMENTS					PERMITTED ADVERTISING SIGNS				
Crane Model & Jib Length	Consumption		Service Size		Max. Area for Single Sign on 1 Side of Counterjib (ft^2)	< OR>	Max. Area for Two Signs, 1 on Each Side of Counterjib (ft^2)	Max. Center of Sign to CL of Crane Distance (ft)	Maximum Height of Sign (ft)
SK575.32	Nominal (kVA)	Peak (kVA)	Nominal (Amps)	Peak (Amps)					
any	240	*n/a*	300	*n/a*	40.4		40.4	17.5	5.0
Note: N/A indicates the information is not available.					**Note:** Signs shall not be attached to hand railings.				

OSHA 1926-1435(c) - The size and location of signs installed on tower cranes must be in accordance with manufactuer specifications.

FOR APPROVAL

MAXIM CRANE WORKS

This drawing has been prepared for the sole use of Maxim Crane Works. It is loaned to the recipient for confidential use only. Reproduction or distribution shall not be performed without the express written consent of Maxim Crane Works.

Paycor Stadium
CINCINNATI, OH
SIGNAGE & ELECTRICAL REQUIREMENTS

MESSER CONSTRUCTION

REV NOTE DATE

Job #: 25-0834
Drw by: AH
Chk by: RN
Sheet: X-2.2

plot size: ANSI D (22.00 x 34.00 Inches)
plot scale: 1:1
plot date: 8/10/26
filename: X-2.2.1 SIGNAGE.DWG

When the project is awarded

1. Review and approve the tower crane "For Approval" drawings to confirm the crane location shown on Drawing X-4.2 and top of foundation elevation shown on Drawing X-5.1.

Pre-Erection Activities

1. Provide details of foundation construction prior to date of crane erection:
   - 1.1. If the foundation was designed by Maxim, provide results of concrete compressive strength testing, reinforcing steel inspection reports, pile test reports (if applicable) and the results of as-built survey.
   - 1.2. If the foundation was designed by others, provide the signed and sealed foundation design, results of concrete compressive strength testing, reinforcing steel inspection reports, pile test reports (if applicable) and the results of as-built survey.

2. Conduct a pre-erection walk-down prior to the scheduled crane erection date and complete the worksheet with the Maxim representative.

3. Confirm the assist crane setup and laydown areas identified in the erection plan are available for use and there are no underground utilities or vaults in the area of the assist crane setup location(s).

4. Provide an electrician for erecting the crane. Electrician to connect the crane's power cable to the fused disconnect box.

5. Set the base section plumb within the tolerances shown on Drawing X-3. Confirm the base section is plumb prior to crane erection and provide the survey results.

6. Provide labor and materials to install any desired lighting for the mast, jib and/or lighted signage. Provide a disconnect with a dedicated breaker between the lights and the crane electrical panel. Maxim's tower technician will show the electrician where the disconnect can be installed. All lighting and signage details shall be provided for review at least 7 days prior to erection of the crane. Confirm any proposed signage meets the limits provided in the table on Drawing X-2.2. Voltage supply for lighting or signage will be 480 VAC. If a lower voltage supply is required, a transformer with electrical protection in addition to the fused disconnect or disconnect with a breaker for the signage and/or lights will be required by Others.

7. Provide power for the crane stubbed up with a fused disconnect located just outside the foundation. Electrical conduit shall not penetrate the tower crane foundation unless it is included in the design.

8. File for the FAA Notification Aeronautical Study Number (ASN).

9. If the tower crane will have a structural connection (tie-in) to the building, submit the tower crane drawings to the EOR for design of the crane connection to the structure and build-up (if required).

Pre-Dismantle Activities

1. Conduct a pre-dismantle walk-down prior to the dismantle and complete the worksheet with Maxim representative.

2. Provide electrician on site for dismantle and to remove any signage or lighting installed to the crane.

3. Confirm the assist crane setup and laydown areas identified in the dismantle plan are available for use and there are no underground utilities or vaults in the area of the assist crane setup location(s).

FOR APPROVAL

MAXIM CRANE WORKS

This drawing has been prepared for the sole use of Maxim Crane Works. It is loaned to the recipient for confidential use only. Reproduction or distribution shall not be performed without the express written consent of Maxim Crane Works.

Paycor Stadium
CINCINNATI, OH
CUSTOMER CHECKLIST & RESPONSIBILITIES

MESSER CONSTRUCTION

REV	NOTE	DATE

Job #: 25-0834
Drw by: AH
Chk by: RN
Sheet: X-2.3

plot size: ANSI D (22.00 x 34.00 inches)
plot scale: 1:1
plot date: 8/11/25R
filename: X-2 & C-2R.DWG

Peiner SK575
TC1

FOUNDATION REACTION FORCES							
Tower Crane	SK575.32			Anchor Stool	S60M39		
Jb Length (ft)	all	available lengths		Base Mast Section	S213 w/ M2 (system line)		
Hook Height (ft)	213			Mast Leg Spacing	7.05	ft	
IN SERVICE CASE				**OUT OF SERVICE CASE**			
Overturning Moment	Mo =	6,226	ft-kips	Overturning Moment	Mo =	3,078	ft-kips
Vertical Load	V =	329	kips	Vertical Load	V =	319	kips
Horizontal Load	H =	11	kips	Horizontal Load	H =	34	kips
Slewing Moment	Ms =	465	ft-kips	Slewing Moment	Ms =	0	ft-kips
Max. Axial Force	R1 =	707	kips	Max. Axial Force	R1 =	388	kips
Max. Uplift Force	R2 =	542	kips	Max. Uplift Force	R2 =	229	kips
Corner Force	R3 =	82	kips	Corner Force	R3 =	80	kips
REACTIONS DURING ASSEMBLY CASE				**WIND FROM THE SIDE (62 MPH) CASE**			
Overturning Moment	Mo =	3,078	ft-kips	Overturning Moment	Mo =	0	ft-kips
Vertical Load	V =	319	kips	Vertical Load	V =	0	kips
Horizontal Load	H =	34	kips	Horizontal Load	H =	0	kips
Slewing Moment	Ms =	465	ft-kips	Slewing Moment	Ms =	0	ft-kips
Max. Axial Force	R1 =	388	kips	Max. Axial Force	R1 =	0	kips
Max. Uplift Force	R2 =	229	kips	Max. Uplift Force	R2 =	0	kips
Corner Force	R3 =	80	kips	Corner Force	R3 =	0	kips

Reaction Force Notes:
1. Zero values indicate information is not available.
2. The foundation reactions shown are service loads applied to the foundation for the freestanding condition.

The tower crane foundation design shall be performed by a licensed professional engineer familiar with tower cranes. A copy of the signed and sealed design shall be provided for Maxim's records.

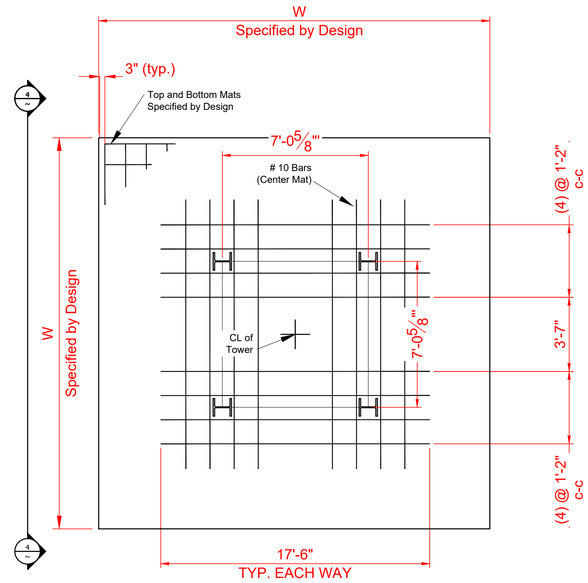

1 TOWER / ANCHOR SYSTEM LINE
Scale: NTS

Notes:

1. The crane foundation shall be designed in accordance with the recommendations from a site specific geotechnical report.
2. It is recommended the concrete shall reach the following compressive strength:
   75% for Mast Erection
   90% for Upper Erection
   100% for Load Test & Operation
3. Foundations located within a 1.5H:1V slope of the toe of an excavation shall not be permitted. The customer shall verify that there are no underground structures, utilities or obstructions in the area of the proposed crane location(s).
4. The out of service foundation reactions provided are based on straight-line winds from the rear of the crane with the Vult indicated in the table. The minimum ASME B30.3 wind speed for the site is also provided for reference.
5. It is recommended the concrete foundation have a hard trowel finish.
6. This foundation may be considered mass concrete. The foundation designer and concrete installation contractor shall take steps to control the effects of the heat of hydration, especially when using a high early strength mix design. In accordance with ACI 301-20, the internal temperature of the concrete must not exceed 160 degrees F, and the differential in temperature between the core concrete and the exterior concrete must not exceed 35 degrees F.

Base Section Set Procedure:

1. Install bottom reinforcement
2. Build leveling pads. Bottom reinforcing mat shall be continuous through leveling pads.
3. Place base assembly on leveling pads.
4. Confirm correct orientation of the mast section with the plan view.
5. **Set base assembly level using shims as required. The base assembly shall be set level prior to pouring the foundation for the crane. The tower mast shall be erected plumb to within a tolerance of 1:500 (0.96 inches in 40 feet).**
6. Install center and top reinforcement mats.
7. **See detail 2 for required finished concrete surface relative to the anchor stool.**

Minimum ASME B30.3 Design Wind	
Building ASCE 7 Wind Speed ($V_{ult\ 3\text{-}sec}$) (mph) =	106
ASCE 7 Exposure Category =	C
Tower Crane Duration =	1 - 2 Years
ASCE 37 Reduction =	0.85
Minimum ASME B30.3 Crane Design Wind = $V_{ult\ 3\text{-}sec}$ (mph) =	**90**
Actual Crane Design Wind Used	
$V_{ult\ 3\text{-}sec}$ (mph) =	**94**
Exposure Category =	**C**

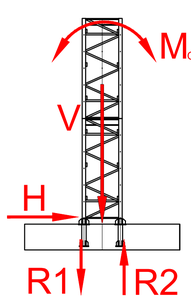

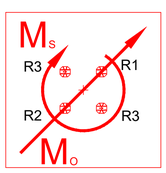

Worst Case Shown

FOOTING REACTION NOMENCLATURE

Mo:	OVERTURNING MOMENT
V:	VERTICAL FORCE
H:	HORIZONTAL FORCE
Ms:	SLEWING MOMENT
R1	MAXIMUM AXIAL FORCE FROM Mo & V
R2	MAXIMUM UPLIFT FORCE FROM Mo & V
R3	CORNER FORCE FROM Mo & V

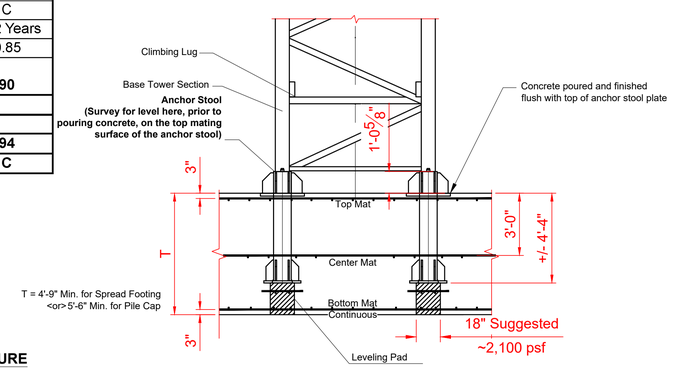

Note: Min. thickness shown is for anchor stool embedment. The designed thickness shall be selected to satisfy overturning, shear and other design checks.

4 S60 FOUNDATION ELEVATION
SCALE: NTS

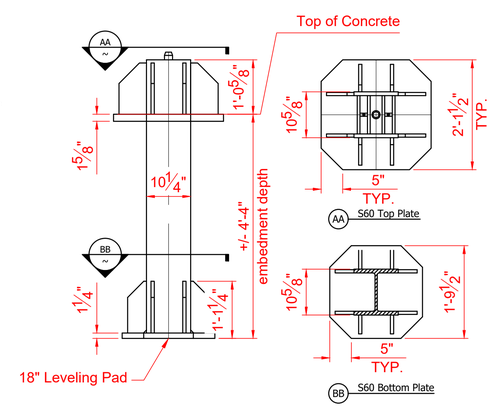

2 S60 ANCHOR STOOL DIMENSIONS
Scale: NTS

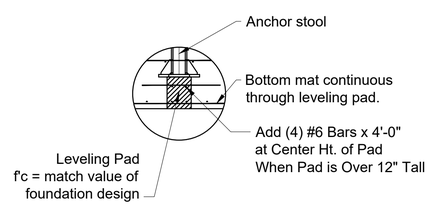

3 LEVELING PAD
SCALE: NTS

FOR APPROVAL

MAXIM CRANE WORKS

This drawing has been prepared for the sole use of Maxim Crane Works. It is loaned to the recipient for confidential use only. Reproduction or distribution shall not be performed without the express written consent of Maxim Crane Works.

Paycor Stadium
CINCINNATI, OH
FOUNDATION REACTIONS

MESSER CONSTRUCTION

REV	NOTE	DATE

Job #: 25-0834
Drw by: DMD
Chk by: ---
Sheet: X-3.1

plot size: ANSI D (22.00 x 34.00 inches)
plot scale: 1:1
plot date: 8/10/26
filename: X-3.1 FOUNDATION REACTIONS.DWG

Note:

1. The plan view was taken from a drawing prepared by Davies Engineering Group and titled "G003" dated February 27, 2026.

2. It is the contractor's responsibility to verify the location of the crane(s) and confirm the crane components do not conflict with any part of the existing or proposed structure at all elevations whether shown or not represented on this drawing prior to installing the foundation.

DRAWING SCALE 1"=30'

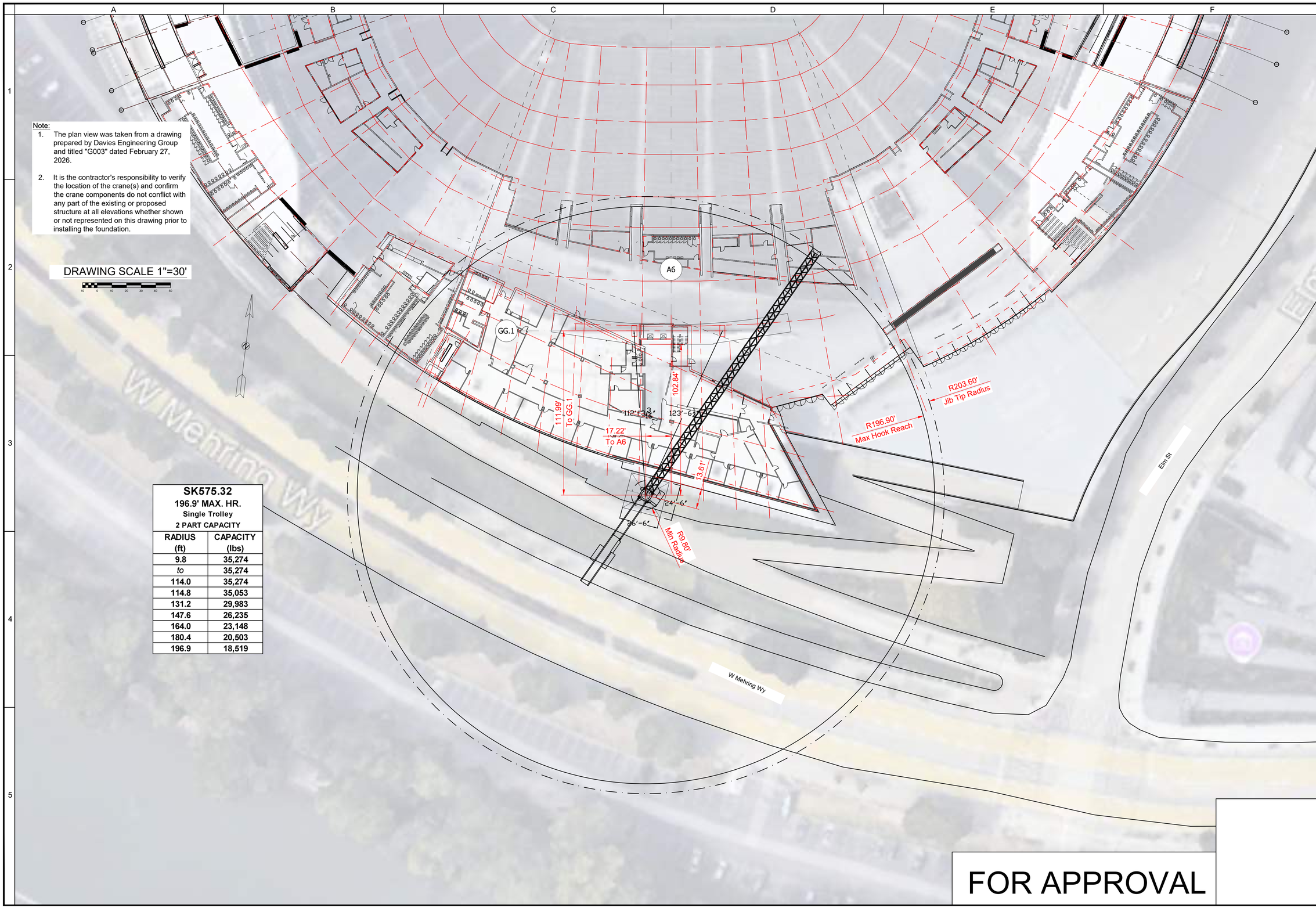

SK575.32	
196.9' MAX. HR.	
Single Trolley	
2 PART CAPACITY	
RADIUS (ft)	CAPACITY (lbs)
9.8	35,274
to	35,274
114.0	35,274
114.8	35,053
131.2	29,983
147.6	26,235
164.0	23,148
180.4	20,503
196.9	18,519

FOR APPROVAL

MAXIM CRANE WORKS

This drawing has been prepared for the sole use of Maxim Crane Works. It is loaned to the recipient for confidential use only. Reproduction or distribution shall not be performed without the express written consent of Maxim Crane Works.

Paycor Stadium
CINCINNATI, OH
OVERALL SITE PLAN

MESSER CONSTRUCTION

REV	NOTE	DATE

Job #: 25-0834
Drw by: AH
Chk by: RN
Sheet: X-4.1

plot size: ANSI D (22.00 x 34.00 Inches)
plot scale: 1:1
plot date: 8/10/26
filename: X-4.1 OVERALL SITE PLAN.DWG

Note:
1. The plan view was taken from a drawing prepared by Davies Engineering Group and titled "G003" dated February 27, 2026.
2. It is the contractor's responsibility to verify the location of the crane(s) and confirm the crane components do not conflict with any part of the existing or proposed structure at all elevations whether shown or not represented on this drawing prior to installing the foundation.

DRAWING SCALE 1"=30'

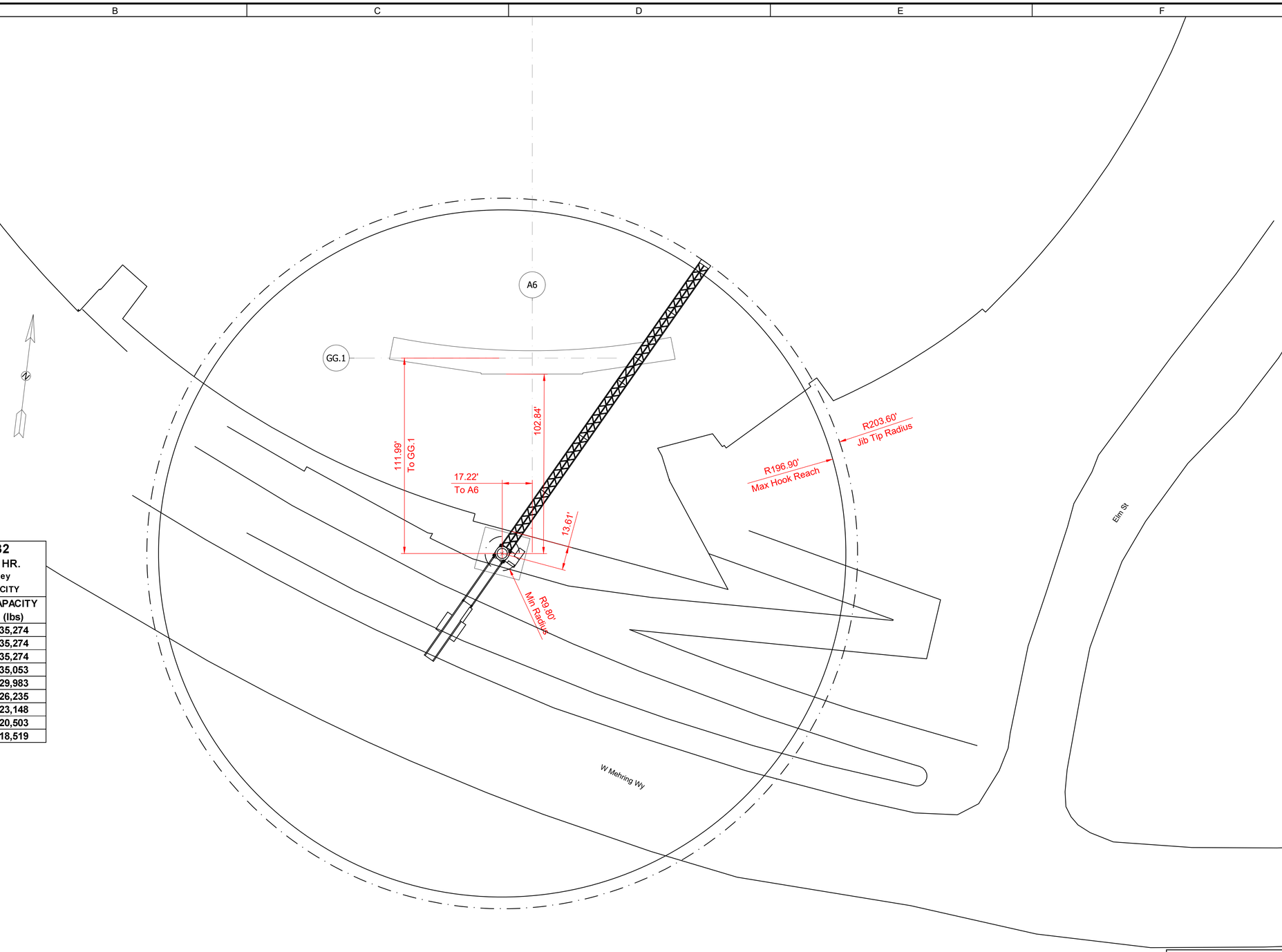

SK575.32 196.9' MAX. HR. Single Trolley 2 PART CAPACITY	
RADIUS (ft)	CAPACITY (lbs)
9.8	35,274
to	35,274
114.0	35,274
114.8	35,053
131.2	29,983
147.6	26,235
164.0	23,148
180.4	20,503
196.9	18,519

FOR APPROVAL

MAXIM CRANE WORKS

This drawing has been prepared for the sole use of Maxim Crane Works. It is loaned to the recipient for confidential use only. Reproduction or distribution shall not be performed without the express written consent of Maxim Crane Works.

Paycor Stadium
CINCINNATI, OH
CRANE COVERAGE DIAGRAM

MESSER CONSTRUCTION

REV	NOTE	DATE

Job #: 25-0834
Drw by: AH
Chk by: RN
Sheet: X-4.2

plot size: ANSI D (22.00' x 34.00 inches)
plot scale: 1:1
plot date: 8/10/26
filename: X-4.2 CRANE COVERAGE DIAGRAM.DWG

Notes:

1. The elevation view was taken from a drawing prepared by Davies Engineering Group and titled "A202" dated February 27, 2026.

2. In-service working conditions are restricted to wind speeds less than or equal to 45 mph per FEM 1.001 measured at the top of the crane. See General Notes for guidance on permissible wind speed for lifting loads with exposed area greater than 9.8 square feet per ton of chart capacity. If wind speeds exceed 45 mph, the tower crane shall be placed out of operation and be allowed to weathervane 360 degrees in accordance with the operations manual.

3. The Contractor is responsible for verifying all job site dimensions and shall report any discrepancies to the Tower Crane Division of Maxim Crane Works prior to commencing with the installation.

DRAWING SCALE 1"=30"

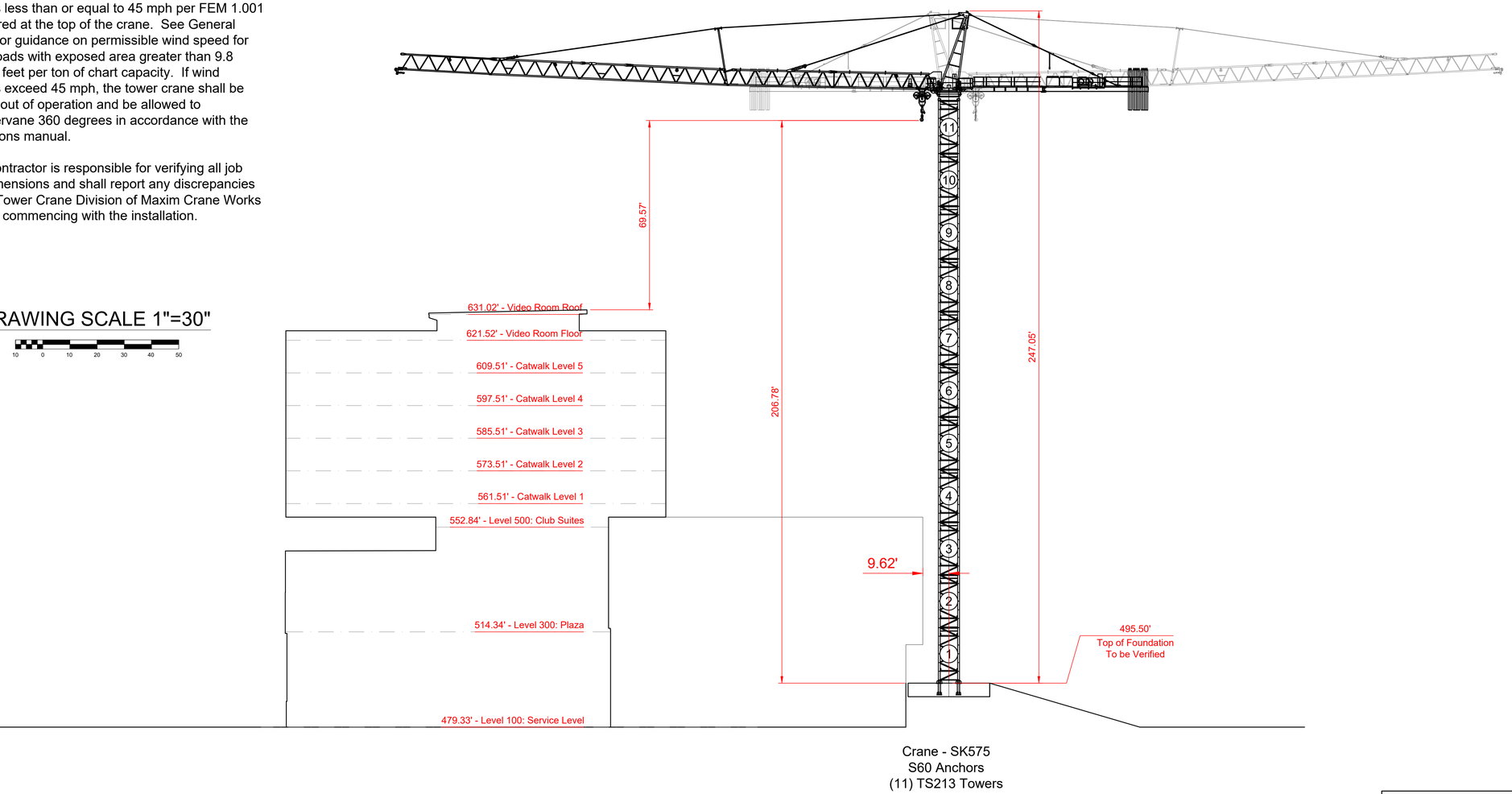

Crane - SK575
S60 Anchors
(11) TS213 Towers

FOR APPROVAL

MAXIM CRANE WORKS

This drawing has been prepared for the sole use of Maxim Crane Works. It is loaned to the recipient for confidential use only. Reproduction or distribution shall not be performed without the express written consent of Maxim Crane Works.

Paycor Stadium
CINCINNATI, OH
INITIAL ELEVATION

MESSER CONSTRUCTION

REV	NOTE	DATE

Job #: 25-0834
Drw by: AH
Chk by: RN
Sheet: X-5.1

plot size: ANSI D (22.00 x 34.00 Inches)
plot scale: 1:1
plot date: 8/10/26
filename: X-5.1 INITIAL ELEVATION.DWG

SECTION 01 32 26 - CONSTRUCTION PROGRESS REPORTING

PART 1 - GENERAL

1.1 Daily Reports

A. Trade Contractors are required to prepare daily reports. This daily construction report should record at a minimum, the following information concerning events at the project site:

1. Number of personnel onsite, including subcontractors.
2. Summary of work completed.
3. Equipment onsite.
4. Material deliveries.
5. High and low temperatures and general weather conditions, including the presence of snow or rain.
6. Accidents or incidents.
7. Unusual events (refer to special reports).
8. Stoppages, delays, shortages, and losses.
9. Meter readings and similar recordings.
10. Emergency procedures.
11. Orders and requests of authorities having jurisdiction.
12. Change orders received and implemented.
13. Construction change directives received and implemented.
14. Services connected and disconnected.
15. Equipment or system tests and startups.

1.2 Reports are to be submitted in a neat and legible format daily to Construction Manager each morning for the previous day's work. No progress payments will be made to the Trade Contractor until all of their daily reports are received by Contractor for that particular month.

END OF SECTION 01 32 26

DIVISION 01 – GENERAL CONDITIONS
SECTION 01 33 00
SUBMITTALS

PART 1 - GENERAL

1.1 SECTION INCLUDES

A. Proposed Subcontractor and Supplier List

B. Contractor's Construction Schedule

C. Schedule of Values

D. Guarantees and Warranties

1.2 RELATED SECTIONS

A. Section 013100 - Project Coordination procedures and requirements.

B. Section 013323 - Submittal requirements for Shop Drawings, Product Data, and Samples.

C. Submittals required by this Section are administrative in nature and do not constitute approval of substitutions, deviations, or changes to the Contract Documents unless explicitly approved in writing in accordance with Section 012513 – Product Substitution Procedures.

1.3 PROPOSED SUBCONTRACTOR AND SUPPLIER LIST

A. Submit with Bid.

1.4 CONTRACTOR'S CONSTRUCTION SCHEDULE

A. Submit complete itemized Contractor's Construction Schedule to Construction Manager, within three (3) business days of execution of contract. Contractor's Construction Schedule shall be coordinated with all subcontractors, in accordance with Sections 013216 and 013323.

B. Revise Contractor's Construction Schedule monthly, at the time of request for payment submittal. When Contractor's Construction Schedule is unchanged, submit a letter certifying that the previous Schedule is unchanged.

1.5 SCHEDULE OF VALUES

A. Submit Schedule of Values to Construction Manager, within three (3) business days of execution of contract, coordinated with all subcontractors, in accordance with the General Conditions.

B. Prior to preparation of Schedule of Values, review proposed subdivisions of work in the Schedule of Values with Construction Manager and Architect, for approval.

1.6 GUARANTEES AND WARRANTIES

A. With request for inspection for Substantial Completion, submit all warranties, guarantees, and bonds in accordance with Section 014000 – Quality Requirements.

PART 2 - PRODUCTS (Not Used)

PART 3 - EXECUTION (Not Used)

END OF SECTION 01 33 00

SECTION 01 33 00 – SUBMITTAL PROCEDURES

PART 1 - GENERAL

1.1 SUMMARY

A. Section includes:

1. Shop drawings are technical drawings and data that have been specifically prepared for this project, including but not limited to:
   a. Fabrication and installation drawings.
   b. Setting diagrams.
   c. Shop work manufacturing instructions.
   d. Coordination drawings (for use on-site).
   e. Schedules.
   f. Concrete Mix Designs.

2. Standard information prepared without specific reference to a project is not considered to be shop drawings.

3. Product data includes standard printed information on manufactured products that has not been specifically prepared for this project, including but not limited to the following items:
   a. Manufacturer's product specifications and installation instructions.
   b. Standard color charts.
   c. Catalog cuts.
   d. Printed performance curves, independent technical analysis of performance, or similar.
   e. Operational range diagrams.
   f. Standard product operating and maintenance manuals.
   g. Mill reports.
   h. Safety data sheets (SDS) on all material provided or used in execution of the Work.
   i. Samples are physical examples of work, including, but not limited to the following items:
   j. Partial sections of manufactured or fabricated work.
   k. Small cuts or containers of materials.
   l. Complete units of repetitively-used materials.
   m. Swatches showing color, texture, and pattern.
   n. Color range sets.
   o. Units of work to be used for independent inspection and testing.

1.2 SUBMITTALS

A. General
   1. Promptly after the Contract has been signed, the Contractor shall submit complete and detailed shop drawings to the Owner or its representative for the work of the various trades,

and the Owner or its representative shall approve or reject them with reasonable promptness.

2. The Contractor, prior to submitting the shop drawings, shall review all shop drawings, check all conditions, check, and verify all field measurements, and mark all corrections, sign, and date each set.
3. No shop drawings will be reviewed without the signature of Contractor, which will signify that he has checked drawings.
4. No faxed copies to the Engineer for approval will be accepted.

B. Coordination of Submittal Times
1. Prepare and transmit each submittal sufficiently in advance of the scheduled performance of related work and other applicable activities.
2. Transmit different kinds of submittals for the same unit of work so that processing will not be delayed by the need to review submittals concurrently for coordination.
3. The Owner will endeavor to complete his review of submittals within 7 calendar days of receipt. Submittals shall be returned noted: “No exceptions noted”, or “Exceptions noted”, or “Exceptions noted: revise and resubmit”. Fabrication of material before the receipt of shop drawings for that material noted “No exceptions noted” shall be at the Contractor’s risk.

C. No extension of time will be authorized because of the Contractor's failure to transmit submittals sufficiently in advance of the work.

D. Submittal Preparation
1. Mark each submittal with a permanent label for identification. Provide the following information on the label for proper processing and recording of action taken.
   a. Project name.
   b. Date.
   c. Name and address of Owner.
   d. Name and address of Contractor.
   e. Name and address of subcontractor.
   f. Name and address of supplier.
   g. Name of manufacturer.
   h. Number and title of appropriate Specification Section.
   i. Drawing number and detail references, as appropriate.
   j. Similar definitive information, as necessary.
2. Provide a space on the label for the Contractor's review and approval markings, and a space for the Owner's "Action" marking.

1.3 SPECIFIC SUBMITTAL REQUIREMENTS

A. General
1. 1. Specific submittal requirements for individual units of Work are specified in the applicable Specification Section.
2. Except as otherwise indicated in the individual Specification Sections, comply with the requirements specified herein for each type of submittal.

B. Shop Drawings

1. Information required on shop drawings hall include dimensions, identification of specific products and materials which are included in the Work, information showing compliance with specified standards, and notations of coordination requirements with other work.
2. Provide special notation of dimensions that have been established by field measurement.
3. Highlight, encircle or otherwise indicate deviations from the Contract Documents on the shop drawings.
4. Coordination Drawings
   a. Provide coordination drawings where required for the integration of the Work, including Work first shown in detail on shop drawings or product data.
   b. Show sequencing and relationship of separate units of Work which must interface in a restricted manner to fit in the space provided or function as indicated.
   c. Coordination drawings are considered shop drawings and must be definitive in nature.
5. Do not permit shop drawing copies without an appropriate final "Action" marking to be used in connection with the Work.
6. Do not reproduce Contract Documents or copy standard printed information as the basis of shop drawings.
7. Initial Submittal
   a. Provide an electronic version of each submittal. An electronic version will be returned. The Contractor should maintain a printed copy on site during the project.
8. Final Submittal
9. Provide an electronic version of each revised submittal after the Initial Submittal review. The Contractor should maintain a printed copy on site during the project.

C. Product Data
1. General information required specifically as product data includes manufacturer's standard printed recommendations for application and use, compliance with recognized standards of trade associations and testing agencies, and the application of their labels and seals (if any), special notation of dimensions which have been verified by way of field measurement, special coordination requirements for interfacing the material, product or system with other work, and material safety data sheets.
2. Preparation
   a. Collect an electronic version of the required product data.
   b. Mark the electronic version to show which choices and options are applicable to the project.
3. Submittals
   a. Product data submittal is required for information and record and to determine that the products, materials, and systems comply with the provisions of the Contract Documents.
   b. The initial submittal is also the final submittal, except where it is observed that there is non-compliance with the provisions of the Contract Documents and the submittal promptly returned to the Contractor marked with the appropriate "Action."
4. Final Distribution
   a. An electronic version of the submittals will be returned to the Contractor.
   b. Furnish copies of product data to subcontractors, suppliers, fabricators, manufacturers, installers, governing authorities, and others as required for proper performance of the Work.
   c. Show distribution on transmittal forms.
5. Installation Copy

a. Do not proceed with installation of materials, products, and systems until a copy of product data applicable to the installation is in the possession of the installer.
b. Do not permit the use of unmarked copies of product data in connection with the performance of the Work.

D. Samples
1. Submit a minimum of two samples for visual review of general generic kind, color, pattern, and texture, and with other related elements of the Work.
2. Samples are also submitted for quality control comparison of these characteristics between the final sample submittal and the actual work as it is delivered and installed.
3. Refer to individual Work Sections of these Specifications for additional sample requirements which may be intended for examination or testing of additional characteristics.
4. Compliance with other required characteristics is the exclusive responsibility of the Contractor; such compliance is not considered in the Owner's review and "Action" indication on sample submittals.
5. Documentation required specifically for sample submittals includes a generic description of the sample, the sample source or the product name or manufacturer, compliance with governing regulations and recognized standards.
6. Indicate limitations in terms of availability, sizes, delivery time and similar limiting
7. characteristics.

E. Miscellaneous Submittals
1. Inspection and Test Reports
a. Classify each inspection and test report as being either "shop drawings" or "product data," depending on whether the report is specially prepared for the project or a standard publication of workmanship control testing at the point of production.
b. Process inspection and tests reports accordingly.

PART 2 - PRODUCTS

Not Used.

PART 3 - EXECUTION

Not Used.

END OF SECTION 01 33 00

DIVISION 01 – GENERAL CONDITIONS
SECTION 01 33 23
SHOP DRAWINGS, PRODUCT DATA, AND SAMPLES

PART 1 - GENERAL

1.1 SUMMARY

A. This Section specifies procedural requirements for non–administrative submittals, including shop drawings, product data, samples, coordination drawings, and other work–related submittals. Shop drawings, product data, samples, coordination drawings, and other work–related submittals are required to amplify, expand, and coordinate information contained in Contract Documents.

B. Refer to other Division 01 Sections and other Contract Documents for specifications on administrative, non–work–related submittals. Those submittals include, but are not limited to:

1. Permits
2. Payment applications
3. Performance and payment bonds
4. Insurance certificates
5. Inspection, testing, and certification reports
6. Schedule of values
7. Progress reports
8. Subcontractor and Supplier List(s)
9. Safety plans and other emergency procedures
10. Schedules

C. Miscellaneous submittals are work–related, non–administrative submittals that do not conform to the previous two categories, including but not limited to:

1. Survey data and reports
2. Project photographs
3. Record drawings
4. Field measurement data

D. Submittals are not intended to modify, replace, or supersede requirements of the Contract Documents unless explicitly approved in writing in accordance with Section 012513 – Product Substitution Procedures.

1.2 SUBMITTAL PROCEDURES

A. General:

1. Submit complete and detailed information required by the Specifications. Construction Manager will review submittals with reasonable promptness. Review of submittals is for general conformance with the design intent and Contract Documents and does not constitute approval of substitutions, deviations, or changes to the Contract Documents.

2. Submit information from a specification section in the following order: (i) product data, (ii) shop drawings, and (iii) samples.
3. Before forwarding information to Construction Manager, review submittal information, check conditions, mark corrections, and sign and date each set.
4. Construction Manager will not review submittal information Contractor has not signed. Contractor's signature means Contractor has checked the submittals for conformance to the project requirements and compatibility with related work.
5. Except where otherwise indicated, the Construction Manager will utilize construction project collaboration software for the electronic transmission, tracking, and management of all submittals. Refer to Section 011100 – Summary of Work.

B. Coordination:

1. Coordinate submittal preparation and processing with prosecution of the Work. Coordinate each submittal with other submittals and related activities including testing, purchasing, fabrication, delivery, and similar activities that require sequential activity.
2. Contractor shall review, coordinate, and forward submittals of interrelated work as a single, comprehensive submittal package to Construction Manager.

C. Submittal Time Coordination:

1. Prepare and transmit each submittal to the Construction Manager within 14 calendar days after award of Contract, or as agreed to by the Construction Manager. Prepare and transmit in advance of scheduled performance of related work and other applicable activities.
2. Construction Manager reserves the right to withhold action on submittals that require coordination with other submittals until the related submittals have been received by the Construction Manager.

D. Review Time:

1. Allow minimum of 14 calendar days so the Project will not be delayed because of time required to properly process submittals, including time for resubmittal, if necessary. Advise the Construction Manager on each submittal if processing time is critical to progress of the Work and if the Work would be expedited if processing time is shortened.
2. Construction Manager will advise Contractor when a submittal being processed will be delayed for coordination.
3. Owner will not extend Total Contract Time because of Contractor's failure to transmit submittals to the Construction Manager sufficiently in advance of the affected portion of Work.

E. Submittal Preparation: Mark each submittal with a permanent label for identification. Provide the following information on the label for proper processing and recording of the submittal:

1. Project name
2. Date.
3. Name and address of Contractor.
4. Name and address of Subcontractor.
5. Name and address of supplier.
6. Name of manufacturer.
7. Number and title of corresponding Specification Section(s).

8. Drawing number and detail references, as appropriate.
9. Similar definitive information as necessary.
10. Stamp each piece of literature or drawing being submitted. A stamp impression on a separate sheet is not permitted. After Contract Award, the Construction Manager will provide further instructions for the stamp's format and contents.

F. Submittal Transmittal:
1. Appropriately package each submittal for transmittal and handling. Include a transmittal form with each hard copy or electronic file submittal from Contractor to Construction Manager. Submittals received from sources other than Contractor will be returned to Contractor without action.
2. Format of transmittal form shall be approved by the Construction Manager.
3. On the transmittal form, record relevant information, any requests for data, as well as any deviations from the requirements of the Contract Documents, including minor variations and limitations. Failure to clearly identify deviations shall constitute a representation that the submittal fully complies with the Contract Documents.

1.3 SPECIFIC SUBMITTAL REQUIREMENTS

A. General: Comply with requirements specified herein for each type of submittal, as well as any additional specific submittal requirements for individual units of work specified in the applicable Specification Section.

B. Provide special notation of dimensions established by field measurement. Highlight, encircle, and otherwise indicate deviations from Contract Documents. Construction Manager and Architect will not review shop drawings having incomplete dimensions. Construction Manager and Architect will not review or verify accuracy of field dimensions.

C. Inspection, Testing, and Certification Reports:

1. Classify each inspection and test report as being either shop drawings or product data, depending on whether the report is specially prepared for the project, or a standard publication of workmanship control testing at the point of production.
2. Process inspection and test reports accordingly.

D. Warranties:

1. Refer to Section 014000 for general and specific requirements for warranties, product bonds, workmanship bonds, and maintenance agreements.
2. In addition to copies desired for Contractor's use, furnish five (5) executed copies of warranties, bonds, or agreements. Provide additional copies of warranties for Operations & Maintenance Manuals.

E. Survey Data: Refer to Section 017700 and individual Sections for general and specific requirements on property surveys, field measurements, quantitative records of actual work, damage surveys, and similar data required by individual Sections of these Specifications.

1.4 SUBMITTAL ACTION MARKINGS

A. Interpret the action marking of the Architect or Engineer on returned submittals as follows. Action markings indicate review for general conformance only and do not constitute approval of deviations, substitutions, or changes to the Contract Documents unless specifically noted in writing.

1. NO EXCEPTIONS NOTED, or other similar wording:
   No corrections; proceed with the work.
2. EXCEPTIONS NOTED, or other similar wording:
   Do not fabricate or furnish items noted for correction without correcting noted discrepancies. Resubmittal is not required for approval, but resubmittal is required for the Owner's records for as-built documentation.
3. EXCEPTIONS NOTED, REVISE AND RESUBMIT, or other similar wording:
   Submittal is rejected as not in accordance with Contract requirements, or for other justified cause. Correct deficiencies and resubmit for further review.

1.5 ADDITIONAL SUBMITTALS:

Permits, Licenses and Certificates: For the Owner's records, submit to Construction Manager copies of permits, licenses, certificates, inspection reports, releases, jurisdiction settlements, notices, receipts for fee payments, judgments, and similar documents, correspondence, and records established in conjunction with compliance with standards and regulations which bear on the Work.

PART 2 - PRODUCTS (Not Used)

PART 3 - EXECUTION (Not Used)

END OF SECTION 01 33 23

SECTION 01 35 43 - ENVIRONMENTAL PROCEDURES - 5S PROGRAM

PART 1 - GENERAL

1.1 SUMMARY

A. The Zero Injury culture embraces the 5S Strategy to create a safe, organized jobsite to prevent slips, trips and falls.

B. The 5S Program has been put in place to drive consistency across all projects and set a "Best in Class" standard to help achieve Zero Injury by eliminating slips/trips/falls from poor housekeeping/organization.

C. This summary should in no way be construed as being all-inclusive. It is issued as a guide to aid each Trade Contractor in their understanding of the 5S expectations on this project.

1.2 PROJECT DESCRIPTION AND REQUIREMENTS

A. As a part of the Lean Culture on our project sites, the Construction Manager is instituting the following MINIMUM requirements for each Trade Contractor to achieve a safer more productive project.

B. The components of the 5S Program are as follows:

1. **Sort – Just in time Deliveries**: Materials are only allowed to be delivered to the site if they will be installed within a one week time period of delivery. Any materials that will not be installed must be removed from the site.

2. **Straighten – Organized Material & Equipment Storage:** Materials and equipment must be stored in designated laydown areas. Walking and working spaces must be kept organized at all times. No material or equipment is allowed to be stored in egress/access paths. Storage requirements for exterior and interior spaces are as follows:

   a. Exterior – Materials and equipment must be stored on dunnage, pallets or carts.

   b. Interior – Materials and equipment must be stored on pallets, carts or racks and easily moveable on wheels.

3. **Shine – Continuous Daily Cleanup:** Requirements for continuous cleanup for exterior and interior spaces area as follows:

   a. Exterior
      1) Each Trade Contractor shall immediately pick up all of their debris and deposit it into mobile trash carts/hoppers (provided by respective Trade Contractor). Each Trade Contractor is responsible for emptying these containers into a dumpster provided by the Construction Manager.

2) Every Trade Contractor is required at the end of each and every workday to cleanup and organize equipment, materials and debris from that day's work activities and clean their work area.

b. Interior: Nothing Hits the Floor – Daily cleanup:

1) Every work crew has a cart with necessary cleaning tools. Each Trade Contractor shall immediately deposit their debris into mobile trash carts (provide by respective Trade Contractor). Each Trade Contractor is responsible to remove these carts from the building daily and empty them into a dumpster provided by the Construction Manager.

2) Every Trade Contractor is required at the end of every workday to cleanup and organize equipment, materials, and debris from that day's work activities and sweep their work area.

3) Electrical cords, welding leads, temporary heat, and temporary water lines are to be off the floor 100% of the time and suspended using non-conductive materials.

4. **Standardize – Color Coded Delivery Process:** Each Trade Contractor will be designated a specific paint or sticker color (designated by the Construction Manager and provided by respective Trade Contractor) to mark all deliverables to the project. All materials, including but not limited to, pallets, packaging, boxes, buckets, etc., must be marked with their respective paint color. All items that are not marked upon arrival at the project site, will be rejected.

5. **Sustain – Composite Broom Crew:** Every week, or at Construction Manager's request, each Trade Contractor shall provide personnel to participate in cleaning all unidentified debris and broom sweeping for a full work shift or until complete. This polishing effort is in addition to normal daily cleaning.

a. Each Trade Contractor shall provide (1) person for every (10) people working on site for respective company (including Trade Contractors) to participate in composite crew.

1) Minimum participation by each Trade Contractor is (1) person, regardless of number of people Trade Contractor has on site up to (10).

2) Participation requirement applies for each week the Trade Contractor has personnel on the project site.

b. Each Trade Contractor shall furnish all equipment, including but not limited to, brooms, shovels, and dump carts, to complete this activity.

c. Construction Manager will determine the location and scope of the composite cleaning crew each week as dictated by the project conditions. It is understood that this may include "exterior Trade Contractors" need to work inside the building and

vice versa as project conditions require to maintain the best possible project conditions.

d. Failure to provide the personnel and equipment as described above will result in a backcharge per 1.2.C below.

C. Failure to abide by any of the requirements above will result in a back charge of $250/man hour needed to address any deficiencies.

1.3 ASSIGNMENT OF RESPONSIBILITY

A. The Construction Manager will provide the following as a part of the 5S Program

1. Logistics planning for designated material storage and assignment of color codes

2. Dumpsters located appropriately for trade contractors to empty carts

3. Oversight of composite cleaning crews.

B. Each Trade Contractor will provide, at a minimum, the following for the 5S Program

1. Mobile Trash Carts/Hopper
   a. One cart per each individual crew
   b. Covers for carts as applicable to project work requirements

2. Cleaning Equipment
   a. Brooms, shovels, etc., for daily cleanup and composite crews

3. Marking Paint and/or Colored Tags for materials, equipment, etc., brought to the project site.

C. Color Codes for all Trade Contractor material delivered to/stored on the project site are as follows:

Construction Manager	Light Green	
General Trades	Brown	
Sitework / Site Utilities	Yellow	
Steel	Dark Blue	
Concrete / Foundations	Green	
Roofing	Purple	
Aluminum & Glass	White	
Framing & Drywall	Light Blue	
Flooring	Maroon	

Fire Protection	Pink	
Plumbing	Blue	
HVAC	Silver	
Electric	Red	
Telecommunications	Orange	
Painting	Black	
Casework / Millwork	Teal	

END OF SECTION 01 35 43

DIVISION 01 – GENERAL REQUIREMENTS
SECTION 01 40 00
QUALITY REQUIREMENTS

PART 1 - GENERAL

1.1 SUMMARY

A. Required inspection and testing services to assist in the determination of compliance of the Work with specified or indicated requirements. Required services do not relieve Contractor of the responsibility to comply with Contract Documents.

B. Quality control services include inspections, tests, and related actions, including reports performed by independent agencies and governing authorities.

C. Specific quality control requirements for individual units of work are in those Specifications Sections.

D. Inspections, tests, and related actions specified in Contract Documents are not intended to limit Contractor's quality control procedures which facilitate overall compliance with Contract Document requirements.

E. Requirements for Contractor to provide quality control services required by the Owner, governing authorities, or other authorized entities are not limited by provisions of this Section.

F. Replace rejected work at no additional cost to the Owner and without extension to Total Contract Time, including work rejected due to nonconformance with specified appearance, finish quality, or installation tolerances.

1.2 RESPONSIBILITIES

A. Contractor Responsibilities:

1. All inspections, tests, and similar quality control services are Contractor's responsibility, except where specifically indicated as being the Owner's responsibility, or where specifically indicated as the responsibility of another agency or organization.
2. Costs for quality control services that are the Contractor’s responsibility which are specified to be performed by an independent lab or agency (not directly by Contractor) shall be included in the Base Bid.
3. Where services are specified to be performed by an independent lab or agency, Contractor shall employ and pay an independent agency, testing laboratory, or other qualified firm that is approved by the Owner.

B. Owner Responsibilities:

1. Owner will pay for quality control testing associated with geotechnical testing and inspection, unless noted otherwise.

2. Owner will employ and pay for the services of an independent agency, testing laboratory, or other qualified firm to perform services which are the Owner's responsibility.

C. Retest Responsibility:

1. When results of required inspections, tests, or similar services indicate non-complying Work, subsequent tests are Contractor's responsibility.
2. Testing of revised and replaced work is Contractor's responsibility.

D. Responsibility for Associated Services:

1. Cooperate with independent agencies performing required inspections, tests, and similar services by providing auxiliary services listed in this paragraph.
   a. Provide access.
   b. Take samples or assist with taking samples.
   c. Deliver samples to test laboratories.
   d. Secure and protect samples and test equipment at the Project Site.
2. Provide other auxiliary services as are reasonably requested.

E. Coordination:

1. Coordinate the sequence of inspections, tests, and similar services to accommodate those required services with a minimum of delay in progress of the Work. Coordinate to avoid removing and replacing work to accommodate inspections and tests. Contractor is responsible for scheduling times for inspections, tests, taking of samples and similar activities, whether the services are the Owner's or Contractor's responsibility.
2. If the laws, ordinances, rules, regulations, or order of public authorities having jurisdiction require work to be inspected, tested, or approved, notify the Construction Manager in advance so the Construction Manager may observe inspection, testing, or approval.

F. Special Tests:

1. Owner may require Contractor to perform special test(s) on installed materials or equipment to verify conformance to Specifications.
2. Owner will pay for test(s) where materials or equipment meet or exceed specified requirements. If tested item(s) fail to meet requirements, Contractor is responsible for costs of the test(s) and to make corrections at no cost to the Owner.

1.3 QUALITY ASSURANCE

A. Qualification for Service Agencies:

1. Except as otherwise indicated, engage inspection and test service agencies, including independent testing laboratories, which are prequalified as complying with Recommended Requirements for Independent Laboratory Qualification by the American Council of Independent Laboratories, and which are recognized in the industry as specialized in the types of inspections and tests to be performed.
2. Contractor's testing agencies are subject to approval by the Owner.

B. Codes and Standards: Perform required testing in accordance with applicable codes and regulations and with standards indicated in the Specifications Sections.

C. Installer Qualifications:
   1. Use installers experienced in the type of Work being performed, with a minimum of three (3) completed project of similar scope and complexity within the past five (5) years.
   2. Provide documentation of installer experience when requested by the Architect.

1.4 SUBMITTALS

A. General:

   1. Refer to Section 013323 for general submittal requirements and Section 017700 for close-out requirements. Refer to individual Specification Sections for specific requirements. Submission of inspection or test reports does not constitute approval of Work that does not otherwise comply with the Contract Documents.
   2. Electronically distribute certified, written reports of each inspection, test, or similar service directly to:
      a. Construction Manager. Submit up to 2 hard copies, if requested by the Construction Manager.
      b. Electronically distribute copies of each written report directly to the governing authority, Owner, Architect, and/or Engineer, if the Owner or Construction Manager so directs.

B. Report Data: Written reports of each inspection, test, or similar service shall include, but are not limited to:

   1. Name of testing agency or test laboratory
   2. Dates and detailed description of exact location(s) of where samples were taken or where tests or inspections were performed.
   3. Names of individuals making the inspection or test.
   4. Designation of the work and test method.
   5. Complete inspection or test data.
   6. Test results.
   7. Interpretations of test results.
   8. Notation of significant ambient conditions at the time of sample taking and testing.
   9. Comments or professional opinion of whether inspected or tested work complies with the requirements of Contract Documents.
   10. Recommendations on retesting, if applicable.

1.5 REPAIR AND PROTECTION

A. General:
   1. After completing inspection, testing, sample–taking and similar services, repair damaged Work and restore substrates and finishes to eliminate deficiencies, including deficiencies in the visual qualities of exposed finishes.
   2. Protect Work exposed by quality control service activities. Protect repaired Work.

3. Repair and protection are Contractor's responsibility, regardless of the assignment of responsibility for inspection, testing or similar services.

1.6 GUARANTEES, WARRANTIES AND BONDS

A. Warrant the Work for one (1) year, starting with date of Substantial Completion for the Contract, unless the requirements herein are superseded by more stringent requirements in individual technical Specification Sections.

B. Should defects develop in the Work within the specified period due to faulty materials or workmanship, correct the Work to conform to Contract Documents. Execute repairs and corrective work, including cost of making good other work damaged or otherwise affected by making repairs, without extra charge to Owner and within 5 calendar days after written notice, or sooner if required to maintain restroom availability for public use by the Owner or Construction Manager. On parts of the Work corrected under the Warranty, extend the warranty period for the corrected parts for one year from the date of correction.

C. Submit five (5) copies of warranties, guarantees, and bonds. Show the name and location of the Project and the name of the Owner (County of Hamilton). Owner shall have the right to assign warranties, guarantees, and bonds in whole or in part to end-users as designated by the Owner.

D. Delivery of warranties, guarantees, and bonds does not relieve Contractor of obligations of the Contract.

1.7 FORM OF WARRANTY

A. Warranty period on equipment, labor, and materials shall be the manufacturer's standard, or as specified in the Specifications Sections, but not less than required by paragraph 1.6.A this Section.

B. Furnish specified written warranties with the request for inspection for Certificate of Substantial Completion. Submit warranties on Contractor's letterhead. Include one warranty for each separate Contractor and Subcontractor scope or unit of work, signed jointly by Contractor and Subcontractor or supplier.

C. Form of warranty is as follows (form of warranty not written as follows is cause for its rejection):

(Form of Warranty is on the following page.)

****

WARRANTY

Name of Project:

_____

Scope of Work:

_____

_____

_____

We warrant the Work to be in accordance with the Contract Documents. We will correct the parts of the Work not in conformance with the Contract Documents, or that becomes, or is found to be defective, within one year after the Date of Substantial Completion. We will bear the cost of making good the damage caused by the defective Work, including damage caused by its correction or removal, to the Owner's property or to property for which the Owner is liable. This warranty does not apply to Work which has been abused, neglected, or altered by others. The warranty period begins at 12:00 Noon on the Date of Substantial Completion.

Substantial Completion Date: _____(*)

_____

Signed by:

Contractor:

_____

Subcontractor/Supplier:

_____

****

* (Obtain this date from the Owner before completing the warranty form. Insert the date on the indicated line. Do not type this instruction on the Warranty Form.)

PART 2 - PRODUCTS (Not Used)

PART 3 - EXECUTION

END OF SECTION 01 40 00

SECTION 01 40 01 – QUALITY PROGRAM

PART 1 - GENERAL

1.1 SUMMARY

A. This Section includes administrative and procedural requirements for a Trade Contractor Quality Program required to verify compliance with the Construction Manager Quality Program, including Quality Observation Process. These services do not relieve the Trade Contractor of responsibility for compliance with the Contract Document requirements.

1.2 RELATED DOCUMENTS

A. Drawings and general provisions of the Contract, including General and Supplementary Conditions and other Division 1 Specification Sections, apply to this Section.

1.3 DEFINITIONS

A. Quality-Control Services: Tests, inspections, procedures, and related actions during and after execution of the Work to evaluate that completed construction complies with requirements. Services do not include contract enforcement activities performed by Architect or Construction Manager.

B. Testing Agency: An entity engaged to perform specific tests, inspections, or both. Testing laboratory shall mean the same as testing agency.

C. Construction Manager: The team in charge of supervising the construction phase of the project.

D. QOR: Quality Observation Report

E. QR: Quality Representative – The QR should be proficient in their field of work, capable of identifying issues in advance, capable of verifying submitted materials match the contract documents and coincide with materials delivered to the jobsite, and the ability to perform quality control audits and document their findings on a daily basis. The QR must be someone who is onsite full time and has the authority to make decisions in the field.

F. Autodesk Build: Inspection/observation software.

1.4 CONFLICTING REQUIREMENTS

A. General: If compliance with two or more standards is specified and the standards establish different or conflicting requirements for minimum quantities or quality levels, comply with the most stringent requirement. Refer documentation of uncertainties to Architect for decision prior to proceeding.

1.5 SUBMITTALS

A. Quality Plan: Submit a Quality plan for this project. This plan will outline all aspects of the Trade Contractor's duties with regard to the quality on the project. Including the following:
   1. How Trade Contractor plans to manage quality on the Project.
   2. Control of Documentation.
   3. Material receiving and storage.
   4. Fabrication/construction methods.
   5. General quality checking procedures during fabrication/construction activities.
   6. Specific procedures for documentation of formal testing.
   7. Quality checking forms and records to be utilized.
   8. Quality audits of Trade Contractors during prequalification and prior to acceptance.

B. Schedule of Tests and Inspections: Prepare in tabular form and include the following:

   1. Specification Section number and title.
   2. Description of test and inspection.
   3. Identification of applicable standards.
   4. Identification of test and inspection methods.
   5. Number of tests and inspections required.
   6. Time schedule or time span for tests and inspections.
   7. Entity responsible for performing tests and inspections.
   8. Requirements for obtaining samples.
   9. Unique characteristics of each quality-control service.

C. Permits, Licenses, and Certificates: For Owner's records, submit copies of permits, licenses, certifications, inspection reports, releases, jurisdictional settlements, notices, receipts for fee payments, judgments, correspondence, records, and similar documents, established for compliance with standards and regulations bearing on performance of the Work.

1.6 QUALITY ASSURANCE

A. General: Qualifications paragraphs in this Article establish the minimum qualification levels required; individual Specifications Sections specify additional requirements.

B. Fabricator Qualifications: A firm experienced in producing products similar to those indicated for this Project and with a record of successful in-service performance, as well as sufficient production capacity to produce required units.

C. Factory-Authorized Service Representative Qualifications: An authorized representative of manufacturer who is trained and approved by manufacturer to inspect installation of manufacturer's products that are similar in material, design, and extent to those indicated for this Project.

D. Installer Qualifications: A firm or individual experienced in installing, erecting, or assembling work similar in material, design, and extent to that indicated for this Project, whose work has resulted in construction with a record of successful in-service performance.

E. Manufacturer Qualifications: A firm experienced in manufacturing products or systems similar to those indicated for this Project and with a record of successful in-service performance.

F. Professional Engineer Qualifications: A professional engineer who is legally qualified to practice in jurisdiction where Project is located and who is experienced in providing engineering services of the kind indicated. Engineering services are defined as those performed for installations of the system, assembly, or product that are similar to those indicated for this Project in material, design, and extent.

G. Specialists: Certain sections of the Specifications require that specific construction activities shall be performed by entities who are recognized experts in those operations. Specialists shall satisfy qualification requirements indicated and shall be engaged for the activities indicated.

1. Requirement for specialists shall not supersede building codes and similar regulations governing the Work, nor interfere with local trade-union jurisdictional settlements and similar conventions.

1.7 QUALITY CONTROL

A. Trade Contractor Responsibilities: In addition to responsibilities outlined in 01 40 00 – Quality Requirements each Trade Contractor must provide the following:

1. Attend and contribute to the weekly Quality meeting as part of WWP meeting.

2. Appoint a Quality Representative as part of the construction team who will be the point of contact for all quality and turnover issues. This representative must have an email address.
   a. This representative or representatives shall be submitted to the Construction Manager in list format with all contact information included.
3. Identify and resolve QOR's in a timely manner. The maximum time allowed for each QOR is as follows
   a. 7 calendar days for items through the first 50% of the project schedule.
   b. 5 calendar days for items from 50% through 75% of the project schedule.
   c. 3 calendar days for items from 75% through 90% of the project schedule.
   d. 1 calendar day for items from 90% through 100% of the project schedule.

4. Provide suitably qualified designated QR Inspectors.
5. Maintain accurate records of inspections and turnover issues.
6. Submit inspection records for all areas of their unique scope of work, including final reports.
7. Maintain a register of non-conformance reports issued to suppliers/Trade Contractors and issued from the Construction Manager.
8. Verify that defects discovered in the work performed by the Trade Contractors are identified utilizing the QOR process and adequate corrective actions are to be planned with the Trade Contractor's Superintendents and approved by the Construction Manager prior to their implementation.
9. Cooperate with the Construction Manager in coordination and execution of the Quality Program including preparatory meetings, initial inspections, follow-up inspections, mock-ups, quality coordination meetings, etc.

10. Participate by using Autodesk Build Software. All construction quality issues will be entered, tracked and closed using Autodesk Build. Training will be provided by the Construction Manager. Software Licenses will be provided to the Trade Contractor by the Construction Manager.
11. Adequate internet access is required for each Trade Contractor and is to be accessed by each Trade Contractor. Coordination with the Construction Manager may be acceptable depending upon conditions in the field.
12. Each Trade Contractor is required to provide a minimum of one (1) Tablet device from supported devices list available at

    https://knowledge.autodesk.com/support/bim-360/learn-explore/caas/CloudHelp/cloudhelp/ENU/Docs-About-ACC/files/System-Requirements-html.html

    Device will be located on site at all times at the cost of each Trade Contractor. This tablet will be required to have the Autodesk Build mobile application downloaded and utilized for QOR processes. Each Trade Contractor is strongly encouraged to have a laptop computer in addition to Tablet with printing capability.
13. All QOR's submitted are required to be electronically through the Autodesk Build system. All other forms will not be accepted by the Construction Manager.
14. All construction quality issues entered using Autodesk Build will require photographic evidence of completion from the Trade Contractor. If such evidence is not attached to each individual issue in the system by the Trade Contractor the said issues is not considered complete until re-inspection can be performed by the Construction Manager or issue creating party.
    a. Each photo must include recognizable features clarifying the location accurately corresponds with the issue it is attached with.
15. Implement the Owner's Quality Program requirements accordingly.

B. Construction Manager Responsibilities: Construction Manager will provide the following:

1. Appoint a Quality Representative as part of the construction team who will be the Construction Manager 's point of contact for all quality and turnover issues.
2. Conduct weekly quality meetings as part of the WWP meeting.
3. Conduct project inspections.
    a. Maintain Records of inspections.
    b. Identify and resolve QOR's in a timely manner.
4. Report defects to the Trade Contractor.
5. Record defects: Log and track items through completion of corrections in Autodesk Build.
    a. Maintain a register of non-conformance reports issues to the Trade Contractor.
    b. Verify that defects discovered in the work performed by the Trade Contractors occurring systematically are identified utilizing the QOR process and adequate corrective actions are approved prior to their implementation.
6. Document changes: Log and track modifications to the Contract Documents.
7. Answer tech questions and provide additional training regarding Autodesk Build.

1.8 QUALITY OBSERVATION REPORTS

A. Quality Observation Reports (QOR) will be utilized to report discrepancies in performance or Work as follows:

1. Monitoring Phase: Ongoing monitoring of the construction activities by the Construction Manager, A/E, Special Inspections, Owner and Trade Contractor.

2. Reporting Phase: Quality Observation Report will be distributed daily via email consisting of the following:
   a. Date and time of observation
   b. Area and location of the observation
   c. Observers name and company
   d. Description of the observation
      1) Photo and or floor plan will also be attached for clarity if necessary.
3. Assessment and Recording Phase: QOR will be assessed by the Trade Contractor to determine the following:
   a. Whether observation is deviation from the Contract Documents.
   b. The observation warrants being placed on the QOR database.
4. Database Maintenance: Quality observations shall be logged on Autodesk Build by QOR Administrator
   a. A unique identification number will be allocated to be the observation by Autodesk Build.
   b. The Trade Contractor responsible for the resolution of the issue will be assigned.
   c. A target closeout date will be assigned.
   d. The assigned Trade Contractor will be issued the QOR for action.
5. Resolution Phase: Trade Contractor shall take action to rectify the issue.
   a. Notify QOR Administrator in Autodesk Build when the Trade Contractor has deemed that the issue has been rectified via photo upload and provided corrective action details via comments feature.
   b. The QA/QC Team leader and or representative will view photo or re-inspect and determine if the issue has been satisfactory resolved.
   c. If the issue has been resolved, the database will be updated to show the items as closed.
6. Disputed Resolution: QOR items that cannot be satisfactorily closed will be resolved by formal meeting with Trade Contractor and Construction Manager to develop a plan to close issues in a manner that will prevent delays in the project schedule.

B. QOR Database Management (Autodesk Build): Quality Observation Report Database will be administered by the Construction Manager. The Trade Contractor will interact with Autodesk Build to enter, receive, and close QOR's. The database will track and report on such items as:
   1. QOR's by Trade Contractor / Supplier.
   2. QOR's by Area / System.
   3. Status of each QOR.
   4. Originator.
   5. Description of Quality Observation.
   6. Description of Action required to close QOR.

1.9 QUALIFICATIONS AND TRAINING

A. Qualifications: Trade Contractor shall insure that all employees, subcontract employees, and third party employees are suitably qualified to execute the work they are tasked to do.
   1. Trade Contractors Quality Plan shall indicate what work activities need to have qualified personnel.

2. The Trade Contractor shall insure that there is a file maintained for all persons that require qualifications incorporating current curriculum vitae with such qualifications.
3. Qualifications must be current, including where periodic re-certification is required.
4. Maintain all records on site, available for audit by the Construction Manager.
5. If non-conformities are found, the Trade Contractor shall carry out all the necessary reworks and shall obtain the conformity to the specified requirements as well as subsequent tests.

B. Training: Construction Manager QA/QC Team Leader shall ensure that all relevant Trade Contractor personnel are trained in the requirements of this plan. Training shall be performed over the duration of the project execution.
1. Provide training to all relevant Owner, Architect, Engineer and Trade Contractor personnel in the implementation of the QOR process and all other procedures outlined in this plan.
2. Provide Autodesk Build training to all parties
3. Maintain records for all training.
4. In conjunction with training sessions, review quality system documents and revised or update to reflect comments promoting improvement.

C. Coordination: Coordinate sequence of activities to accommodate required quality assurance and quality-control services with a minimum of delay and to avoid necessity of removing and replacing construction to accommodate testing and inspecting.

END OF SECTION 01 40 01

DIVISION 01 – GENERAL REQUIREMENTS
SECTION 01 42 00
REFERENCES

PART 1 - GENERAL

1.1 DEFINITIONS

A. General: Basic Contract definitions are included in the Conditions of the Contract.

B. "Approved": When used to convey Architect's action on Contractor's submittals, applications, and requests, "approved" is limited to Architect's duties and responsibilities as stated in the Conditions of the Contract.

C. "Directed": A command or instruction by Architect. Other terms including "requested," "authorized," "selected," "required," and "permitted" have the same meaning as "directed."

D. "Indicated": Requirements expressed by graphic representations or in written form on Drawings, in Specifications, and in other Contract Documents. Other terms including "shown," "noted," "scheduled," and "specified" have the same meaning as "indicated."

E. "Regulations": Laws, ordinances, statutes, and lawful orders issued by authorities having jurisdiction, and rules, conventions, and agreements within the construction industry that control performance of the Work.

F. "Furnish": Supply and deliver to Project site, ready for unloading, unpacking, assembly, installation, and similar operations.

G. "Install": Unload, temporarily store, unpack, assemble, erect, place, anchor, apply, work to dimension, finish, cure, protect, clean, and similar operations at Project site.

H. "Provide": Furnish and install, complete and ready for the intended use.

I. "Project Site": Space available for performing construction activities. The extent of Project site is shown on Drawings and may or may not be identical with the description of the land on which Project is to be built.

1.2 INDUSTRY STANDARDS

A. Applicability of Standards: Unless the Contract Documents include more stringent requirements, applicable construction industry standards have the same force and effect as if bound or copied directly into the Contract Documents to the extent referenced. Such standards are made a part of the Contract Documents by reference.

B. Publication Dates: Comply with standards in effect as of date of the Contract Documents unless otherwise indicated.

1. For standards referenced by applicable building codes, comply with dates of standards as listed in building codes.

C. Copies of Standards: Each entity engaged in construction on Project should be familiar with industry standards applicable to its construction activity. Copies of applicable standards are not bound with the Contract Documents.

1. Where copies of standards are needed to perform a required construction activity, obtain copies directly from publication source.

1.3 ABBREVIATIONS AND ACRONYMS

A. Industry Organizations: Where abbreviations and acronyms are used in Specifications or other Contract Documents, they shall mean the recognized name of the entities indicated in Gale's "Encyclopedia of Associations: National Organizations of the U.S." or in Columbia Books' "National Trade & Professional Associations of the United States."

B. Industry Organizations: Where abbreviations and acronyms are used in Specifications or other Contract Documents, they shall mean the recognized name of the entities in the following list. Abbreviations and acronyms not included in this list shall mean the recognized name of the entities indicated in Gale's "Encyclopedia of Associations: National Organizations of the U.S." or in Columbia Books' "National Trade & Professional Associations of the United States." The information in this list is subject to change and is believed to be accurate as of the date of the Contract Documents.

1. AABC - Associated Air Balance Council; www.aabc.com.
2. AAMA - American Architectural Manufacturers Association; www.aamanet.org.
3. AAPFCO - Association of American Plant Food Control Officials; www.aapfco.org.
4. AASHTO - American Association of State Highway and Transportation Officials; www.transportation.org.
5. AATCC - American Association of Textile Chemists and Colorists; www.aatcc.org.
6. ABMA - American Bearing Manufacturers Association; www.americanbearings.org.
7. ABMA - American Boiler Manufacturers Association; www.abma.com.
8. ACI - American Concrete Institute; (Formerly: ACI International); www.concrete.org.
9. ACPA - American Concrete Pipe Association; www.concrete-pipe.org.
10. AEIC - Association of Edison Illuminating Companies, Inc. (The); www.aeic.org.
11. AF&PA - American Forest & Paper Association; www.afandpa.org.
12. AGA - American Gas Association; www.aga.org.
13. AHAM - Association of Home Appliance Manufacturers; www.aham.org.
14. AHRI - Air-Conditioning, Heating, and Refrigeration Institute (The); www.ahrinet.org.
15. AI - Asphalt Institute; www.asphaltinstitute.org.
16. AIA - American Institute of Architects (The); www.aia.org.
17. AISC - American Institute of Steel Construction; www.aisc.org.
18. AISI - American Iron and Steel Institute; www.steel.org.
19. AITC - American Institute of Timber Construction; www.aitc-glulam.org.
20. AMCA - Air Movement and Control Association International, Inc.; www.amca.org.
21. ANSI - American National Standards Institute; www.ansi.org.
22. AOSA - Association of Official Seed Analysts, Inc.; www.aosaseed.com.
23. APA - APA - The Engineered Wood Association; www.apawood.org.
24. APA - Architectural Precast Association; www.archprecast.org.

25. API - American Petroleum Institute; www.api.org.
26. ARI - Air-Conditioning & Refrigeration Institute; (See AHRI).
27. ARI - American Refrigeration Institute; (See AHRI).
28. ARMA - Asphalt Roofing Manufacturers Association; www.asphaltroofing.org.
29. ASCE - American Society of Civil Engineers; www.asce.org.
30. ASCE/SEI - American Society of Civil Engineers/Structural Engineering Institute; (See ASCE).
31. ASHRAE - American Society of Heating, Refrigerating and Air-Conditioning Engineers; www.ashrae.org.
32. ASME - ASME International; (American Society of Mechanical Engineers); www.asme.org.
33. ASSE - American Society of Sanitary Engineering; www.asse-plumbing.org.
34. ASSP - American Society of Safety Professionals (The); www.assp.org.
35. ASTM - ASTM International; www.astm.org.
36. ATIS - Alliance for Telecommunications Industry Solutions; www.atis.org.
37. AVIXA - Audiovisual and Integrated Experience Association; (Formerly: Infocomm International); www.soundandcommunications.com.
38. AWEA - American Wind Energy Association; www.awea.org.
39. AWI - Architectural Woodwork Institute; www.awinet.org.
40. AWMAC - Architectural Woodwork Manufacturers Association of Canada; www.awmac.com.
41. AWPA - American Wood Protection Association; www.awpa.com.
42. AWS - American Welding Society; www.aws.org.
43. AWWA - American Water Works Association; www.awwa.org.
44. BHMA - Builders Hardware Manufacturers Association; www.buildershardware.com.
45. BIA - Brick Industry Association (The); www.gobrick.com.
46. BICSI - BICSI, Inc.; www.bicsi.org.
47. BIFMA - BIFMA International; (Business and Institutional Furniture Manufacturer's Association); www.bifma.org.
48. BISSC - Baking Industry Sanitation Standards Committee; www.bissc.org.
49. BWF - Badminton World Federation; (Formerly: International Badminton Federation); www.bissc.org.
50. CDA - Copper Development Association; www.copper.org.
51. CE - Conformite Europeenne; http://ec.europa.eu/growth/single-market/ce-marking.
52. CEA - Canadian Electricity Association; www.electricity.ca.
53. CFFA - Chemical Fabrics and Film Association, Inc.; www.chemicalfabricsandfilm.com.
54. CFSEI - Cold-Formed Steel Engineers Institute; www.cfsei.org.
55. CGA - Compressed Gas Association; www.cganet.com.
56. CIMA - Cellulose Insulation Manufacturers Association; www.cellulose.org.
57. CISCA - Ceilings & Interior Systems Construction Association; www.cisca.org.
58. CISPI - Cast Iron Soil Pipe Institute; www.cispi.org.
59. CLFMI - Chain Link Fence Manufacturers Institute; www.chainlinkinfo.org.
60. CPA - Composite Panel Association; www.compositepanel.org.
61. CRI - Carpet and Rug Institute (The); www.carpet-rug.org.
62. CRRC - Cool Roof Rating Council; www.coolroofs.org.
63. CRSI - Concrete Reinforcing Steel Institute; www.crsi.org.
64. CSA - CSA Group; www.csa-group.org.
65. CSI - Construction Specifications Institute (The); www.csiresources.org.
66. CSSB - Cedar Shake & Shingle Bureau; www.cedarbureau.org.
67. CTA - Consumer Technology Association; www.cta.tech.

68. CTI - Cooling Technology Institute; (Formerly: Cooling Tower Institute); www.coolingtechnology.org.
69. CWC - Composite Wood Council; (See CPA).
70. DASMA - Door and Access Systems Manufacturers Association; www.dasma.com.
71. DHA - Decorative Hardwoods Association; (Formerly: Hardwood Plywood & Veneer Association); www.decorativehardwoods.org.
72. DHI - Door and Hardware Institute; www.dhi.org.
73. ECA - Electronic Components Association; (See ECIA).
74. ECAMA - Electronic Components Assemblies & Materials Association; (See ECIA).
75. ECIA - Electronic Components Industry Association; www.ecianow.org.
76. EIA - Electronic Industries Alliance; (See TIA).
77. EIMA - EIFS Industry Members Association; www.eima.com.
78. EJMA - Expansion Joint Manufacturers Association, Inc.; www.ejma.org.
79. EOS/ESD Association; (Electrostatic Discharge Association); www.esda.org.
80. ESTA - Entertainment Services and Technology Association; (See PLASA).
81. ETL - Intertek (See Intertek); www.intertek.com.
82. EVO - Efficiency Valuation Organization; www.evo-world.org.
83. FCI - Fluid Controls Institute; www.fluidcontrolsinstitute.org.
84. FIBA - Federation Internationale de Basketball; (The International Basketball Federation); www.fiba.com.
85. FIVB - Federation Internationale de Volleyball; (The International Volleyball Federation); www.fivb.org.
86. FM Approvals - FM Approvals LLC; www.fmglobal.com.
87. FM Global - FM Global; (Formerly: FMG - FM Global); www.fmglobal.com.
88. FRSA - Florida Roofing, Sheet Metal Contractors Association, Inc.; www.floridaroof.com.
89. FSA - Fluid Sealing Association; www.fluidsealing.com.
90. FSC - Forest Stewardship Council U.S.; www.fscus.org.
91. GA - Gypsum Association; www.gypsum.org.
92. GANA - Glass Association of North America; (See NGA).
93. GS - Green Seal; www.greenseal.org.
94. HI - Hydraulic Institute; www.pumps.org.
95. HI/GAMA - Hydronics Institute/Gas Appliance Manufacturers Association; (See AHRI).
96. HMMA - Hollow Metal Manufacturers Association; (See NAAMM).
97. HPVA - Hardwood Plywood & Veneer Association; (See DHA).
98. HPW - H. P. White Laboratory, Inc.; www.hpwhite.com.
99. IAPSC - International Association of Professional Security Consultants; www.iapsc.org.
100. IAS - International Accreditation Service; www.iasonline.org.
101. ICBO - International Conference of Building Officials; (See ICC).
102. ICC - International Code Council; www.iccsafe.org.
103. ICEA - Insulated Cable Engineers Association, Inc.; www.icea.net.
104. ICPA - International Cast Polymer Association; www.theicpa.com.
105. ICRI - International Concrete Repair Institute, Inc.; www.icri.org.
106. IEC - International Electrotechnical Commission; www.iec.ch.
107. IEEE - Institute of Electrical and Electronics Engineers, Inc. (The); www.ieee.org.
108. IES - Illuminating Engineering Society; (Formerly: Illuminating Engineering Society of North America); www.ies.org.
109. IESNA - Illuminating Engineering Society of North America; (See IES).
110. IEST - Institute of Environmental Sciences and Technology; www.iest.org.
111. IGMA - Insulating Glass Manufacturers Alliance; www.igmaonline.org.
112. IGSHPA - International Ground Source Heat Pump Association; www.igshpa.org.

113. II - Infocomm International; (See AVIXA).
114. ILI - Indiana Limestone Institute of America, Inc.; www.iliai.com.
115. Intertek - Intertek Group; (Formerly: ETL SEMCO; Intertek Testing Service NA); www.intertek.com.
116. ISA - International Society of Automation (The); (Formerly: Instrumentation, Systems, and Automation Society); www.isa.org.
117. ISAS - Instrumentation, Systems, and Automation Society (The); (See ISA).
118. ISFA - International Surface Fabricators Association; (Formerly: International Solid Surface Fabricators Association); www.isfanow.org.
119. ISO - International Organization for Standardization; www.iso.org.
120. ISSFA - International Solid Surface Fabricators Association; (See ISFA).
121. ITU - International Telecommunication Union; www.itu.int.
122. KCMA - Kitchen Cabinet Manufacturers Association; www.kcma.org.
123. LMA - Laminating Materials Association; (See CPA).
124. LPI - Lightning Protection Institute; www.lightning.org.
125. MBMA - Metal Building Manufacturers Association; www.mbma.com.
126. MCA - Metal Construction Association; www.metalconstruction.org.
127. MFMA - Maple Flooring Manufacturers Association, Inc.; www.maplefloor.org.
128. MFMA - Metal Framing Manufacturers Association, Inc.; www.metalframingmfg.org.
129. MHIA - Material Handling Industry of America; www.mhia.org.
130. MIA - Marble Institute of America; (See NSI).
131. MMPA - Moulding & Millwork Producers Association; www.wmmpa.com.
132. MPI - Master Painters Institute; www.paintinfo.com.
133. MSS - Manufacturers Standardization Society of The Valve and Fittings Industry Inc.; www.mss-hq.org.
134. NAAMM - National Association of Architectural Metal Manufacturers; www.naamm.org.
135. NACE - NACE International; (National Association of Corrosion Engineers International); www.nace.org.
136. NADCA - National Air Duct Cleaners Association; www.nadca.com.
137. NAIMA - North American Insulation Manufacturers Association; www.naima.org.
138. NALP - National Association of Landscape Professionals; www.landscapeprofessionals.org.
139. NBGQA - National Building Granite Quarries Association, Inc.; www.nbgqa.com.
140. NBI - New Buildings Institute; www.newbuildings.org.
141. NCAA - National Collegiate Athletic Association (The); www.ncaa.org.
142. NCMA - National Concrete Masonry Association; www.ncma.org.
143. NEBB - National Environmental Balancing Bureau; www.nebb.org.
144. NECA - National Electrical Contractors Association; www.necanet.org.
145. NeLMA - Northeastern Lumber Manufacturers Association; www.nelma.org.
146. NEMA - National Electrical Manufacturers Association; www.nema.org.
147. NETA - InterNational Electrical Testing Association; www.netaworld.org.
148. NFHS - National Federation of State High School Associations; www.nfhs.org.
149. NFPA - National Fire Protection Association; www.nfpa.org.
150. NFPA - NFPA International; (See NFPA).
151. NFRC - National Fenestration Rating Council; www.nfrc.org.
152. NGA - National Glass Association (The); (Formerly: Glass Association of North America); www.glass.org.
153. NHLA - National Hardwood Lumber Association; www.nhla.com.
154. NLGA - National Lumber Grades Authority; www.nlga.org.
155. NOFMA - National Oak Flooring Manufacturers Association; (See NWFA).

156. NOMMA - National Ornamental & Miscellaneous Metals Association; www.nomma.org.
157. NRCA - National Roofing Contractors Association; www.nrca.net.
158. NRMCA - National Ready Mixed Concrete Association; www.nrmca.org.
159. NSF - NSF International; www.nsf.org.
160. NSI - National Stone Institute; (Formerly: Marble Institute of America); www.naturalstoneinstitute.org.
161. NSPE - National Society of Professional Engineers; www.nspe.org.
162. NSSGA - National Stone, Sand & Gravel Association; www.nssga.org.
163. NTMA - National Terrazzo & Mosaic Association, Inc. (The); www.ntma.com.
164. NWFA - National Wood Flooring Association; www.nwfa.org.
165. NWRA - National Waste & Recycling Association; www.wasterecycling.org.
166. PCI - Precast/Prestressed Concrete Institute; www.pci.org.
167. PDI - Plumbing & Drainage Institute; www.pdionline.org.
168. PLASA - PLASA; (Formerly: ESTA - Entertainment Services and Technology Association); www.plasa.org.
169. RCSC - Research Council on Structural Connections; www.boltcouncil.org.
170. RFCI - Resilient Floor Covering Institute; www.rfci.com.
171. RIS - Redwood Inspection Service; www.redwoodinspection.com.
172. SAE - SAE International; www.sae.org.
173. SCTE - Society of Cable Telecommunications Engineers; www.scte.org.
174. SDI - Steel Deck Institute; www.sdi.org.
175. SDI - Steel Door Institute; www.steeldoor.org.
176. SEFA - Scientific Equipment and Furniture Association (The); www.sefalabs.com.
177. SEI/ASCE - Structural Engineering Institute/American Society of Civil Engineers; (See ASCE).
178. SIA - Security Industry Association; www.siaonline.org.
179. SJI - Steel Joist Institute; www.steeljoist.org.
180. SMA - Screen Manufacturers Association; www.smainfo.org.
181. SMACNA - Sheet Metal and Air Conditioning Contractors' National Association; www.smacna.org.
182. SMPTE - Society of Motion Picture and Television Engineers; www.smpte.org.
183. SPFA - Spray Polyurethane Foam Alliance; www.sprayfoam.org.
184. SPIB - Southern Pine Inspection Bureau; www.spib.org.
185. SPRI - Single Ply Roofing Industry; www.spri.org.
186. SRCC - Solar Rating & Certification Corporation; www.solar-rating.org.
187. SSINA - Specialty Steel Industry of North America; www.ssina.com.
188. SSPC - SSPC: The Society for Protective Coatings; www.sspc.org.
189. STI - Steel Tank Institute; www.steeltank.com.
190. SWI - Steel Window Institute; www.steelwindows.com.
191. SWPA - Submersible Wastewater Pump Association; www.swpa.org.
192. TCA - Tilt-Up Concrete Association; www.tilt-up.org.
193. TCNA - Tile Council of North America, Inc.; www.tileusa.com.
194. TEMA - Tubular Exchanger Manufacturers Association, Inc.; www.tema.org.
195. TIA - Telecommunications Industry Association (The); (Formerly: TIA/EIA - Telecommunications Industry Association/Electronic Industries Alliance); www.tiaonline.org.
196. TIA/EIA - Telecommunications Industry Association/Electronic Industries Alliance; (See TIA).
197. TMS - The Masonry Society; www.masonrysociety.org.
198. TPI - Truss Plate Institute; www.tpinst.org.

199. TPI - Turfgrass Producers International; www.turfgrasssod.org.
200. TRI - Tile Roofing Institute; www.tileroofing.org.
201. UL - Underwriters Laboratories Inc.; www.ul.com.
202. UNI - Uni-Bell PVC Pipe Association; www.uni-bell.org.
203. USAV - USA Volleyball; www.usavolleyball.org.
204. USGBC - U.S. Green Building Council; www.usgbc.org.
205. USITT - United States Institute for Theatre Technology, Inc.; www.usitt.org.
206. WA - Wallcoverings Association; www.wallcoverings.org.
207. WCLIB - West Coast Lumber Inspection Bureau; www.wclib.org.
208. WCMA - Window Covering Manufacturers Association; www.wcmanet.org.
209. WDMA - Window & Door Manufacturers Association; www.wdma.com.
210. WI - Woodwork Institute; www.wicnet.org.
211. WSRCA - Western States Roofing Contractors Association; www.wsrca.com.
212. WWPA - Western Wood Products Association; www.wwpa.org.

C. Code Agencies: Where abbreviations and acronyms are used in Specifications or other Contract Documents, they shall mean the recognized name of the entities in the following list. This information is believed to be accurate as of the date of the Contract Documents.

1. DIN - Deutsches Institut fur Normung e.V.; www.din.de.
2. IAPMO - International Association of Plumbing and Mechanical Officials; www.iapmo.org.
3. ICC - International Code Council; www.iccsafe.org.
4. ICC-ES - ICC Evaluation Service, LLC; www.icc-es.org.

D. Federal Government Agencies: Where abbreviations and acronyms are used in Specifications or other Contract Documents, they shall mean the recognized name of the entities in the following list. Information is subject to change and is up to date as of the date of the Contract Documents.

1. COE - Army Corps of Engineers; www.usace.army.mil.
2. CPSC - Consumer Product Safety Commission; www.cpsc.gov.
3. DOC - Department of Commerce; National Institute of Standards and Technology; www.nist.gov.
4. DOD - Department of Defense; www.quicksearch.dla.mil.
5. DOE - Department of Energy; www.energy.gov.
6. EPA - Environmental Protection Agency; www.epa.gov.
7. FAA - Federal Aviation Administration; www.faa.gov.
8. FG - Federal Government Publications; www.gpo.gov/fdsys.
9. GSA - General Services Administration; www.gsa.gov.
10. HUD - Department of Housing and Urban Development; www.hud.gov.
11. LBL - Lawrence Berkeley National Laboratory; Environmental Energy Technologies Division; www.eetd.lbl.gov.
12. OSHA - Occupational Safety & Health Administration; www.osha.gov.
13. SD - Department of State; www.state.gov.
14. TRB - Transportation Research Board; National Cooperative Highway Research Program; The National Academies; www.trb.org.
15. USDA - Department of Agriculture; Agriculture Research Service; U.S. Salinity Laboratory; www.ars.usda.gov.
16. USDA - Department of Agriculture; Rural Utilities Service; www.usda.gov.

17. USDOJ - Department of Justice; Office of Justice Programs; National Institute of Justice; www.ojp.usdoj.gov.
18. USP - U.S. Pharmacopeial Convention; www.usp.org.
19. USPS - United States Postal Service; www.usps.com.

E. Standards and Regulations: Where abbreviations and acronyms are used in Specifications or other Contract Documents, they shall mean the recognized name of the standards and regulations in the following list. This information is subject to change and is believed to be accurate as of the date of the Contract Documents.

1. CFR - Code of Federal Regulations; Available from Government Printing Office; www.govinfo.gov.
2. DOD - Department of Defense; Military Specifications and Standards; Available from DLA Document Services; www.quicksearch.dla.mil.
3. DSCC - Defense Supply Center Columbus; (See FS).
4. FED-STD - Federal Standard; (See FS).
5. FS - Federal Specification; Available from DLA Document Services; www.quicksearch.dla.mil.

    a. Available from Defense Standardization Program; www.dsp.dla.mil.
    b. Available from General Services Administration; www.gsa.gov.
    c. Available from National Institute of Building Sciences/Whole Building Design Guide; www.wbdg.org.

6. MILSPEC - Military Specification and Standards; (See DOD).
7. USAB - United States Access Board; www.access-board.gov.
8. USATBCB - U.S. Architectural & Transportation Barriers Compliance Board; (See USAB).

F. State Government Agencies: Where abbreviations and acronyms are used in Specifications or other Contract Documents, they shall mean the recognized name of the entities in the following list. This information is subject to change and is believed to be accurate as of the date of the Contract Documents.

1. CBHF; State of California; Department of Consumer Affairs; Bureau of Electronic and Appliance Repair, Home Furnishings and Thermal Insulation; www.bearhfti.ca.gov.
2. CCR; California Code of Regulations; Office of Administrative Law; California Title 24 Energy Code; www.calregs.com.
3. CDHS; California Department of Health Services; (See CDPH).
4. CDPH; California Department of Public Health; Indoor Air Quality Program; www.cal-iaq.org.
5. CPUC; California Public Utilities Commission; www.cpuc.ca.gov.
6. SCAQMD; South Coast Air Quality Management District; www.aqmd.gov.
7. TFS; Texas A&M Forest Service; Sustainable Forestry and Economic Development; www.txforestservice.tamu.edu.

PART 2 - PRODUCTS (Not Used)

PART 3 - EXECUTION (Not Used)

END OF SECTION 01 42 00

DIVISION 01 – GENERAL CONDITIONS
SECTION 01 42 16
DEFINITIONS, STANDARDS, AND REGULATORY REQUIREMENTS

PART 1 - GENERAL

1.1 SUMMARY

A. This Section provides definitions and specifies procedural and administrative requirements for compliance with governing regulations and the codes and standards imposed upon the Work. Requirements include obtaining permits, licenses, inspections, releases, and similar documentation, as well as payments, statements, and similar requirements associated with regulations, codes, and standards.

1.2 DEFINITIONS

A. General Explanation: Definitions and explanations contained in this Section are not necessarily complete or exclusive; they are general for the Work, to the extent they are not stated more explicitly in another element of the Contract Documents. More detailed definitions may be included elsewhere in the Specifications and on the Drawings.

B. Approve: Where used in conjunction with the Owner's response to submittals, requests, applications, inquiries, reports, and claims by Contractor, the meaning of the word “approved” is held to the limitations of the Owner's responsibilities. “Approval” by the Owner does not release the Contractor from the responsibility to fulfill the requirements of the Contract Documents.

C. Architect or Engineer: KZF Design, Inc.

D. Base Contract: “Base Contract” means the original contract between the Contractor and the Owner for this project. “Base Contract” includes the parts of the Work therein, including any Alternates and Unit Prices accepted by the Owner at the time of Contract Award.

E. Bid Submission Document: Document or form that must be completed and submitted with the Bid. These documents and forms are typically identified in Section 001000 by a box across

F. City: The City of Cincinnati, Ohio.

G. Construction Manager: Messer Construction Co./AECOM Hunt Construction Co.

H. County: The County of Hamilton, or its authorized agent

I. Completion, Final: “Final Completion” refers to the degree of completion at which time the Project, as a whole, is turned over for full use to the Owner and the Work is completed in compliance with the Contract Documents.

J. Completion, Substantial: “Substantial Completion” means the date of the “Certificate of Substantial Completion” issued by the Owner when construction is sufficiently complete in

accordance with the Contract Documents so the Owner may occupy the Work or a portion of the Work for the intended use.

K. Conditions of the Contract: General Conditions, and the Drawings and Specifications (including Division 01), Addenda, Clarifications, Change Orders, and Field Orders issued as part of the Work.

L. Construction Documents: “Construction Documents” means the Drawings, Project Manual (including Division 01), Addenda, Clarifications, Change Orders, Field Orders, and related documents that address the Work.

M. Contractor: The terms “Contractor” and “Trade Contractor” shall have the same meaning. “Contractor” and “Trade Contractor” are used interchangeably.

N. Contract Documents: “Contract Documents” has the identical meaning as “Conditions of the Contract”.

O. Contract Time, Total: “Contract Time” has the identical meaning as “Total Contract Time”.

P. Day(s): Except where stated as meaning business day(s), “day(s)” mean(s) calendar day(s)

Q. Development Manager: Not applicable to this project.

R. Directed, Requested, Approved, etc. Terms “directed”, “requested”, “authorized”, “approved”, “required”, “accepted”, and “permitted” mean “directed by the Owner”, “requested by the Owner”, and similar phrases. Phrases' meanings do not expand the Owner's responsibility into the Contractor's areas of construction supervision and safety.

S. Furnish: “Furnish” means to supply and deliver to the project site, ready for unloading, unpacking, assembly, installation, etc., as applicable in each instance.

T. Indicated: “Indicated” is a cross–reference to graphic representations, notes or schedules on Drawings, to other paragraphs or schedules in the Specification, and to similar means of recording requirements in the Contract Documents. Where “shown”, “noted”, “scheduled” and “specified” are used in lieu of “indicated”, it is for the purpose of helping the reader of the Drawings and Specifications locate the cross–reference. “Indicated” does not imply limitation of location except as specifically noted. “Indicated” does not modify or supersede material performance, system requirements, or installation criteria specified elsewhere in the Contract Documents.

U. Install: “Install” describes operations at the project site, including unloading, unpacking, assembling, erecting, placing, anchoring, applying, working to dimension, finishing, curing, protecting, cleaning, and similar operations, as applicable in each instance.

V. Installer: “Installer” is the entity engaged by a Contractor, Subcontractor, or sub– Subcontractor for performance of a particular unit of work for the project, including installation, erection, application, and similar required operations. It is a general requirement that the entities be expert in the operations they are engaged to perform.

W. Manufacturer's Recommendations: "Manufacturer's recommendations", and variations thereon, means manufacturer's recommendations found in publications commonly available to and used by the architectural and engineering professions.

X. Project Site: "Project Site" is the space available to the Contractor; and refers to the area where the Contractor performs the on–site Work.

Y. Provide: "Provide" means furnish and install, complete and ready for the intended use.

Z. Regulations: "Regulations" includes laws, statutes, ordinances, and lawful orders issued by governing authorities; and the rules, conventions, and agreements within the construction industry which control the performance of the Work, regardless of whether or not they are lawfully imposed by governing authority.

AA. Remove: "Remove" means to remove and legally dispose of indicated items off-site.

BB. Total Contract Time: "Total Contract Time" is the time period allotted for the Work, subject to limitations described in the Contract Documents.

1.3 INDUSTRY STANDARDS

A. General Applicability of Standards:

1. Except to the extent that more explicit or more stringent requirements are in the Contract Documents, applicable standards of the construction industry referenced in the Contract Documents have the same force and effect as if bound directly into the Contract Documents (i.e. are made a part of the Contract Documents by reference).
2. Refer to Contract Documents for resolution of overlapping and conflicting requirements that result from the application of several different industry standards to the same unit of work.
3. Refer to individual unit of work Sections for specialized codes and standards the Contractor must keep at the project site available for reference by the Owner.
4. Referenced standards (referenced directly in the Contract Documents or by governing regulations) have precedence over non-referenced standards which are recognized in the industry and which may be applicable to the Work.
5. Non-referenced standards recognized in the construction industry, except as otherwise limited in the Contract Documents, are applicable to the Work, and will be enforced for the performance of the Work. Owner will determine if an industry code or standard is applicable to the Work, or which of several standards are applicable to the Work.

B. Publication Dates

Except as otherwise indicated, where compliance with an industry standard is required, comply with the standard in effect as of the date of the Construction Documents.

C. Copies of Standards

1. A requirement of the Contract Documents is that each entity performing work be experienced in that part of the Work being performed, and that the entities be familiar with recognized industry standards applicable to the Contractor's parts of the Work. Copies of applicable standards are not bound with the Contract Documents.
2. Where copies of standards are needed for proper performance of the Work, obtain copies directly from the source.
3. Though certain copies of standards needed for enforcement of the requirements may be required submittals, the Owner reserves the right to require the Contractor to submit other copies of the standards as necessary for enforcement of the requirements.

D. Failure to be informed of the requirements of standard specifications is not cause for additional compensation.

E. In case of conflict between the published standard and Project Specifications, the more stringent governs.

F. Where applicable, Construction Document references to technical societies, organizations, and other construction entities is in accordance with the following abbreviations:

AIA	American Institute of Architects
ACI	American Concrete Institute
AIEE	American Institute of Electrical Engineers
AISC	American Institute of Steel Construction
AISI	American Iron and Steel Institute
ANSI	American National Standards Institute
ASHRAE	American Society of Heating, Refrigeration and Air-Conditioning Engineers
ASME	American Society of Mechanical Engineers
ASRE	American Society of Refrigeration Engineers
ASTM	American Society of Testing Materials
AASHTO	American Association of State Highway & Transportation Officials
AWSC	American Welding Society Code
AWWA	American Water Works Association
CCS	City of Cincinnati Supplement to ODOT
COBC	Cincinnati Ohio Building Code
CRSI	Concrete Reinforcing Steel Institute
DOP	City of Cincinnati Department of Purchasing
FS	Federal Specification
IPCEA	Insulated Power Cable Engineers Association
MIL	Military Specification
NBFU	National Board of Fire Underwriters
NBS	National Bureau of Standards
NFPA	National Fire Protection Association
NEC	National Electric Code
NEMA	National Electric Manufacturers Association
ODOT	Ohio Department of Transportation
SAE	Society of Automotive Engineers
SPR	Simplified Practice Recommendation
SSPC	Steel Structures Painting Council

SWRI	Sealant, Waterproofing & Restoration Institute
UL	Underwriter's Laboratories

1.4 REGULATORY REQUIREMENTS

A. Applicable Codes: The "Cincinnati Ohio Building Code" as administered and modified by the Department of Buildings and Inspections, City of Cincinnati, governs the work in addition to other code authorities.

B. Adherence to Codes and Regulations:
   1. Before proceeding with the Work, review Drawings and Specifications for applicable laws, ordinances, rules, and regulations.
   2. Comply with the applicable laws, ordinances, rules, and regulations unless notice is given to the City of Cincinnati, Department of Buildings and Inspections, in writing, of the discrepancy before proceeding with the Work.
   3. Compliance with applicable codes and regulations does not relieve the Contractor of compliance with more stringent requirements of the Contract Documents.

C. Requirements of Regulatory Agencies (Permits, etc.):
   1. Construction Manager will make application and pay for the City of Cincinnati Demolition Permit.
   2. Each Contractor and Subcontractor is responsible for obtaining other permits and inspections required for their work by laws, ordinances, rules, and regulations, including final certificates, inspections, etc.

D. Inspections by Governing Agencies
   1. Before covering up work required to be inspected, arrange for inspections and tests of the installation, as required by Governing Authorities and by Specifications.
   2. Provide necessary tools, equipment, and personnel to conduct the required tests, and notify the City of Cincinnati, Department of Buildings and Inspections, at least three (3) business days in advance of scheduled inspections and tests.
   3. Submit approved certificate of inspection from the Governing Authority to Owner and Construction Manager before request for final payment.

PART 2 - MATERIALS (Not Used)

PART 3 - EXECUTION (Not Used)

END OF SECTION 01 42 16

SECTION 01 45 16 – GROUND PENETRATION REQUIREMENTS

PART 1 - GENERAL

1.1 SUMMARY

A. The purpose of this procedure is to define minimum utility avoidance requirements for all Contractors, Trade Contractors, and other companies engaged in ground penetration activities.

B. This procedure applies to all personnel associated with excavation, trenching, demolition and other ground penetrating activities including dee stakes, sign posts, fence posts, ground rods, etc. on Construction Manager projects. The result of this procedure is to:
   1. Ensure that all excavation, trenching, and demolition activities and work within excavations / trenches are adequately planned and performed safely.
   2. Define the standard work process to avoid any utility strikes during all excavation, trenching and demolition activities.

C. Excavation means the use of hand tools, powered equipment, or explosives to move earth, rock, or other materials in order to penetrate, bore or drill into the earth, or to demolish any structure whether or not it is intended that the demolition will disturb the earth.

1.2 PROJECT DESCRIPTION AND REQUIREMENTS

A. Pre-Planning:

   1. Trade Contractor(s) shall conduct thorough planning prior to the execution of any Excavation/Trenching or Penetration activities. This requires the Trade Contractor complete the Ground Penetration / Dig Permit DAILY prior to starting work.

B. Utility Avoidance:

   1. All underground and overhead utilities within the Excavation / Trenching or Penetration work area shall be surveyed and positively identified before excavation work commences. It is the responsibility of every Trade Contractor performing an excavation to call the 811 Utility Protection Service in their state to obtain an individual reference / dig number. No Trade Contractor shall work under another Trade Contractor's ticket number, including the Construction Manager's.

      Since 811 will only mark utilities in the Right-of-Way, a private locating service must also be used to locate any utilities not located by 811 inside the project / excavation area. Obtain as built drawings showing the location of all known / found utilities with in the excavation site and reference the Contract Documents to verify there are no utilities that were not marked by the Locating Service.

   2. <u>811 Procedures:</u>
      a. Assess the area to be excavated, gather all the information that will needed to complete the locate work order form.

b. Premark the location where the excavations will occur in white paint, flags or both.
c. Contact 811 and provide details of the excavation.
d. Obtain reference / ticket number, record the number on the Ground Penetration / Dig Permit and keep it for the duration of the excavation or longer is necessary.
e. Utility owners will mark any existing utilities around the excavation site.
f. Wait the required amount of time before commencing excavation.
    1) Advance notice needed to inform 811 of excavation.
        a) IND – 2 working days.
        b) OH – 2 working days
        c) KY – 2 working days
        d) TN – 3 working days
        e) NC – 3 working days
g. Protect and preserve the markings of tolerance zones of underground utility facilities until those markings are no longer required for proper and safe excavations. If markings are destroyed or lost do not repaint the markings, contact 811 to remark the found/known utilities. Markings are only valid for the following amount of time before 811 has to be notified again of the excavation.
    1) IND – 20 days
    2) OH – as long visible
    3) KY – 21 days
    4) TN – 15 calendar days
    5) NC – 15 days

3. <u>Private Property Locating:</u>
    a. ALL excavations/borings/mass excavations/ground penetrating activities must be coordinated with the Construction Manager and the Owner to have a 3rd Party Locating Service survey the areas of excavation that are not in the right-of-way.
    b. Trade Contractor must coordinate with the Construction Manager and contact the designated 3rd Party Locating Service prior to any ground penetrating activities to have the service locate the area where the activities occur. Prior to arrival of the 3rd Party Locating Service, the area that needs surveyed should be painted or marked with flags.
    c. The 3rd Party Locating Service shall mark all found utilities with paint or flags.
    d. All markings must be protected and preserved so the location of the utility is known at all times.
    e. Take pictures and keep records of the survey to include with the Excavation Permit.

4. <u>Ground Penetrations:</u>
    a. Prior to any excavation beginning, the scope of work must be reviewed with the Construction Manager to discuss the process and hazards related to task.
    b. Trade Contractors must complete the Ground Penetration / Dig Permit daily and have it signed by the Construction Manager's project representative.
    c. Protect and preserve the markings of utilities until those markings are no longer required for proper and safe excavations.
    d. The exact location and depth of any known / found utilities within 24" of the excavation must be identified by one of the following means:
        1) Hand digging
        2) Pot holing

3) Hydro / Vacuum excavation

e. Maintain a minimum of 24" (tolerance zone) between the utility and the cutting edge or point of powered equipment.

f. When approaching and excavating within the tolerance zone of underground utility facilities with powered equipment, the Trade Contractor must provide a spotter to visually monitor the excavation activity for any indication of the underground utility.

g. Conduct the excavation within the tolerance zone of the utility in a careful, prudent and non-destructive manner such as hand digging, hydro/vacuum excavation. Do not excavate within the tolerance zone with any powered equipment.

h. Review area(s) of work to verify there are no power lines/overhead cables in the work area. If there are, a plan must be approved by the Construction Manager prior to proceeding.

5. Demolition (sub-surface):

a. When demoing existing utilities, the same procedures listed in section 1.2-B.4 must be followed.

b. When demoing existing structures, the Construction Manager's demolition checklist must be completed prior to commencement.

1.3 ASSIGNMENT OF RESPONSIBILITY

1. Construction Manager shall provide all record documents for the Trade Contractor to use to locate new / existing utilities.
2. Trade Contractor shall include all costs to achieve the requirements listed in this specification section.

END OF SECTION 01 45 16

SECTION 01 50 00 - TEMPORARY FACILITIES AND CONTROLS

PART 1 - GENERAL

1.1 SUMMARY

A. Section includes requirements for temporary utilities and controls, support facilities, and security and protection facilities.

1.2 REGULATIONS

A. Comply with industry standards and applicable laws and regulations of authorities having jurisdiction including, but not limited to:

1. Building code requirements
2. Health and Safety requirements
3. Utility company requirements
4. Police, fire department and rescue squad rules
5. Environmental protection regulations.

B. Inspections: Each temporary utility shall be tested prior to use as per the local authority having jurisdiction.

1.3 ASSIGNMENT OF RESPONSIBILITY

A. The Construction Manager shall assign specific responsibility for installation, maintenance and removal of certain temporary facilities below.

B. Items that have no specific responsibility assigned to them shall apply to each and every Trade Contractor.

C. Termination and Removal: Remove each temporary facility when need for its service has ended, when it has been replaced by authorized use of a permanent facility, or no later than Substantial Completion. Complete or, if necessary, restore permanent construction that may have been delayed because of interference with temporary facility. Repair damaged Work, clean exposed surfaces, and replace construction that cannot be satisfactorily repaired.

1. Materials and facilities that constitute temporary facilities are property of Trade Contractor. Owner reserves right to take possession of Project identification signs.
2. At Substantial Completion, repair, renovate, and clean permanent facilities used during construction period.

PART 2 - LISTING OF REQUIREMENTS

2.1 TEMPORARY POWER AND LIGHTING

A. Summary
1. Each Trade Contractor shall provide temporary power and lighting for construction purposes as needed after mobilization, as noted in the project schedule, or as coordinated with the Construction Manager. Each Trade Contractor shall provide their own generators to provide their own power as required.
2. Non-corded battery powered tools are preferred. However, if corded tools are required each Trade Contractor shall provide their own extension cords as necessary. Extension cords, if used, must remain suspended by non-conducting materials 9' above finished floor elevation and relocated as necessary to facilitate the work

B. Temporary Electric – General Requirements

C. Temporary Lighting
1. Any temporary lighting required by other trades or more stringent than what is described herein is to be furnished by the trade requiring the lighting at their cost.

D. Electrical work shall conform to requirement of the National Electrical Code and all federal, state and local requirements. The Electrical Trade Contractor shall obtain and pay for applications, permits, and inspection pertaining to this work.

2.2 SANITARY FACILITIES

A. Temporary toilet facilities for all workers to be utilized for the duration of the project to be by Construction Manager. Provide number of units as appropriate for number of workers on-site.

2.3 TEMPORARY WATER

A. Each Trade Contractor shall provide its own drinking water and water required for this scope of work.

2.4 FIELD OFFICES AND SHEDS

A. Any Trade Contractor requiring office or storage trailers or sheds shall request space for such through the Construction Manager. There will limited areas for materials storage on the project site. Each Trade Contractor shall be responsible for installation, maintenance and removal of their storage facilities. Prior approval by Construction Manager is required.

2.5 ON-SITE MATERIAL STORAGE

A. The Construction Manager shall designate a lay-down area for stored materials. Said areas shall be kept neat and orderly by those Trade Contractors using it. On-site space will be limited for storage/lay-down. Trade Contractors are asked to follow Messer's Just-in-Time delivery policy when scheduling material deliveries.

2.6 TEMPORARY ROADS AND PAVING

A. Each Trade Contractor shall take measures to minimize mud and debris which might be tracked or fall onto existing roads. Any mud, debris, etc is the responsibility of the Trade Contractor responsible.

2.7 TEMPORARY PARKING

A. Parking is on a paid basis only.

2.8 DEWATERING FACILITIES AND DRAINS

A. Maintain the site, excavations and construction free of water.

B. Comply with individual specification section requirements. If none stated in the specification section, comply with Division 2 sections.

2.9 CONSTRUCTION AND PERSONNEL HOISTING

A. All Trade Contractors shall be responsible for providing their own hoisting.

2.10 CONSTRUCTION SIGNAGE

A. The Construction Manager will provide jobsite directional signage and project identification signage.

B. No other signage will be permitted.

2.11 SITE SECURITY

A. Each Trade Contractor shall be responsible for securing their materials, tools, and equipment.

B. There will not be any security provided after hours.

2.12 TEMPORARY FIRE PROTECTION

A. Existing permanent fire protection system will be active in the facility during the work. Each Trade Contractor shall coordinate work activities with the facility as needed to work with and around the active system.

B. Install and maintain temporary fire protection facilities to comply with NFPA 10 "Standard for Portable Fire Extinguishers" and NFPA 241 "Standard for Safeguarding construction, Alterations, and Demolition Operations." They shall be UL rated; with class and extinguishing agent as required by locations and classes of fire exposures.

C. Locate fire extinguishers where convenient and effective for intended purpose, but not less than one extinguisher on each floor at or near each usable stairwell.

D. Store combustible materials in containers in fire safe locations.

E. Maintain unobstructed access to fire extinguishers, fire hydrants, temporary fire protection facilities, stairways and other access routes for fighting fires. Prohibit smoking in hazardous fire exposure areas.

F. Provide supervision of welding operations, combustion type temporary heating units and similar sources of fire ignition.

G. In addition to each Trade Contractor's own fire extinguisher requirements, the Construction Manager shall provide fire extinguishers at each floor and near each stair per OSHA regulations.

2.13 CONSTRUCTION DEBRIS HANDLING

A. Construction Manager shall provide dumpster(s) for debris and waste materials generated from construction operations of this Trade Contractor. This dumpster shall be used for disposal of materials from this project site only. It shall be emptied promptly when full.

B. Each Trade Contractor shall be responsible for transporting their own debris and waste materials to the dumpster.

C. Trade Contractors performing demolition activities shall provide their own means for removal of debris and demolished materials from the site. The aforementioned dumpster shall not be used for demolition debris, concrete, or concrete washing.

2.14 BARRICADES, WARNING LIGHTS AND SIGNS

A. Trade Contractors shall erect and maintain barricades, warning lights and signs necessary to protect other personnel, the public and the Work. Paint with appropriate colors, graphics, and warning signs to inform personnel and the public of the hazard being protected against. Illuminate when used during periods of darkness.

B. Provide barricades, identification and illumination as required around overhead hazards. Maintain CAZ's at all times when performing overhead work.

END OF SECTION 01 50 00

SECTION 01 56 00 – BARRIERS

PART 1 - GENERAL

1.1 SUMMARY

A. Section Includes
1. Full height rigid and movable construction area enclosures.
2. Dust barriers.
3. Partial height construction barriers.
4. Sawhorse barricades.
5. Vehicle barriers.
6. Temporary pedestrian walkways through partially completed work areas.
7. Miscellaneous barriers and efforts, including construction fencing, caution tape and signage.

B. Related Sections
1. Section 02 41 19: Selective Structural Demolition

1.2 SUBMITTALS

A. Submittals are not required unless Owner or Engineer raise questions or concerns regarding the quality or construction of barriers or enclosures. Potential submittals, if requested, could include the following:
1. Fire-retardant treatment for dimensional lumber and plywood.
2. Fire-resistant visqueen sheeting.
3. Plastic Safety Fencing.
4. Caution Barrier Tape.
5. Enclosure construction details.

PART 2 - PRODUCTS

2.1 MATERIALS

A. Lumber
1. Dimensional lumber
a. Minimum 2 x 4 dimensional lumber.
b. Fire-retardant treated (non-com) with treatment stamp visible.

2. Plywood
a. Minimum 1/2-inch thick.
b. Fire-retardant treated (non-com) with treatment stamp visible.

B. Visqueen Sheeting
   1. Approved Products:
      a. Griffolin fire-retardant type 55-FR.
      b. Midco vinyl fire-resistant reinforced polyfilm.

C. High Visibility Safety Fencing
   1. High density polyethylene material.
   2. Diamond mesh with 1-1/2" openings.
   3. Minimum 4 feet high.
   4. Bright orange color.
   5. Minimum 2200 lbs. break load capacity.

D. Chain Link Fencing
   1. Minimum 6’-0” feet tall.
   2. Minimum 9 gauge galvanized with 2”x2” pattern configuration.
   3. Fence to be panelized system, surface set with ballasted based.
   4. Drilled posts are not permitted.

E. Caution Tape
   1. 1. 3" wide.
   2. Minimum 4 mil thick plastic.
   3. Safety yellow tape with black "CAUTION" lettering, minimum 1-1/2" high.

PART 3 - EXECUTIONS

3.1 GENERAL

A. Work shall not proceed until dust barriers, barricades, construction fencing, or partial or full height barriers or enclosures are in place and secure.

B. Provide barricades to isolate areas directly under work areas for protection of persons or property.

C. Remove barricades at entrances during non-working hours which will obstruct or hinder the use of the entrance.

D. Installation and removal of barricades or barriers shall not damage existing surfaces.

E. The use of anchors which penetrate the existing surface are prohibited, unless approved in advance by Engineer.

F. Remove all evidence of barriers installation upon removal.

G. Contractor is responsible for erection, maintaining, moving and removal of barricades, fencing and barriers from the job site.

3.2 BARRICADES

A. Where barricades are required for vehicular traffic control, provide orange construction fencing to divert traffic around work area. Support orange fencing to prevent sagging along entire length of barricade. Maximum spacing of orange fencing support is ten feet. Construct and provide barricades that are permanent for the period when the barricade is required. Weight or otherwise secure the barricades to keep unauthorized personnel from moving them.

B. Provide partial height or full height dust barriers where noted on drawings or where work performed is adjacent to pedestrian walkways, drive lanes or other public access areas.

C. Use of sawhorses, barrels and yellow caution tape are permitted only with advance approval by Owner.

3.3 FULL HEIGHT CONSTRUCTION AREA ENCLOSURES

A. Where traffic flow is maintained adjacent to work areas, erect full height, floor to underside of soffit above construction area enclosures, using vertical 2 x 4's spaced at 16 inch centers, top and bottom 2 x 4's, and rigid ½ inch thick plywood sheathing. Enclosures to be painted off-white (two independent coats) on the side facing occupied areas of the garage.

B. Prefabricate enclosures in segments convenient to move from location to location. Size enclosures to fit within one inch of beam or column sides.

C. Position enclosures to isolate work areas at approximate locations shown on Drawings. Bracket enclosures segments together to form a continuous wall between beams or columns. Wedge walls assemblies tight to floor, underside slab and beam or column surfaces.

D. Seal gaps between wall assemblies beneath beams and at other locations with visqueen sheathing, stapled to inside enclosure surfaces.

E. Maintain enclosures in neat and clean condition during the work. Touch up paint if needed.

3.4 FULL HEIGHT DUST BARRIERS

A. Erect dust barriers per Drawing details and at locations designated on the Drawings. Extend dust barriers from the deck surface to the bottom of the beam, joist or bridging rib above. Minor lateral adjustments are allowed to facilitate dust barrier installation.

B. Do not damage the existing surfaces when installing and removing dust barriers. Wedges and braces are the only approved method of securing barriers.

C. Doors may be installed in the dust barriers to facilitate construction access. Construct doors from the same material specified for dust barriers. Equip doors with automatic, self-closing devices. Do not prop doors open except temporarily for material delivery.

D. Construct dust barriers and doors to prevent the migration of dust from Work Area to adjacent areas.

E. Erect dust barriers considering the aspects of the structure. Build dust barriers tight around existing piping and other existing items which penetrate or interfere with dust barriers.

F. Dust barriers shall remain in place and maintained in a condition equal to that originally installed until work in a Work Area is complete.

3.5 COVERED SIDEWALKS AND ENTRANCES/ EXITS

A. When any portion of the Work is directly over or within fifteen feet of a sidewalk or entrance/exit, provide a covered walkway for pedestrians to safely pass through the area. Covered walkway shall extend ten feet beyond the end of the Work Area.

B. The covered walkway shall meet the following minimum requirements:
   1. Walkway to be constructed with metal walk-through scaffolding with nominal 2-inch-thickdimensional lumber on the upper surface covered with ¾ inch plywood.
   2. Provide lighting within the enclosed walkway so that pedestrians may safely use passage at all hours.

END OF SECTION 01 33 00

DIVISION 01 – GENERAL CONDITIONS
SECTION 01 73 00
EXECUTION

PART 1 - GENERAL

1.1 SUMMARY

A. Section includes general administrative and procedural requirements governing execution of the Work, including, but not limited to, the following:

1. Construction layout.
2. Field engineering.
3. Installation.
4. Cutting and patching.
5. Coordination of Owner's portion of the Work.
6. Progress cleaning.
7. Starting and adjusting.
8. Protection of installed construction.
9. Correction of the Work.

B. Related Requirements:

1. Section 017700 "Closeout Procedures" for submitting final property survey with Project Record Documents, recording of Owner-accepted deviations from indicated lines and levels, replacing defective work, and final cleaning.
2. Section 024119 "Selective Demolition" for demolition and removal of selected portions of the building.

1.2 DEFINITIONS

A. Cutting: Removal of in-place construction necessary to permit installation or performance of subsequent work.

B. Patching: Fitting and repair work required to restore construction to original conditions after installation of subsequent work.

1.3 QUALITY ASSURANCE

A. Cutting and Patching: Comply with requirements for and limitations on cutting and patching of construction elements.

1. Structural Elements: When cutting and patching structural elements, or when encountering the need for cutting and patching of elements whose structural function is not known, notify Architect of locations and details of cutting and await directions from Architect before proceeding. Shore, brace, and support structural elements during cutting and patching. Do

not cut and patch structural elements in a manner that could change their load-carrying capacity or increase deflection.

2. Operational Elements: Do not cut and patch operating elements and related components in a manner that results in reducing their capacity to perform as intended or that results in increased maintenance or decreased operational life or safety.
3. Other Construction Elements: Do not cut and patch other construction elements or components in a manner that could change their load-carrying capacity, that results in reducing their capacity to perform as intended, or that results in increased maintenance or decreased operational life or safety.
4. Visual Elements: Do not cut and patch construction in a manner that results in visual evidence of cutting and patching. Do not cut and patch exposed construction in a manner that would, in Architect's opinion, reduce the building's aesthetic qualities. Remove and replace construction that has been cut and patched in a visually unsatisfactory manner. This requirement applies to finished flooring systems, wall finishes, tile assemblies, decorative metal elements, ceilings, and painted surfaces.

B. Manufacturer's Installation Instructions: Obtain and maintain on-site manufacturer's written recommendations and instructions for installation of specified products and equipment.

PART 2 - PRODUCTS

2.1 MATERIALS

A. Comply with requirements specified in other Sections.

B. In-Place Materials: Use materials for patching identical to in-place materials. For exposed surfaces, use materials that visually match in-place adjacent surfaces to the fullest extent possible.

1. If identical materials are unavailable or cannot be used, use materials that, when installed, will provide a match acceptable to Architect for the visual and functional performance of in-place materials. Use materials that are not considered hazardous. Where patching occurs in continuous finish systems, extend replacement to natural break points or full surface areas as required to eliminate visual discontinuity.

C. Cleaning Agents: Use cleaning materials and agents recommended by manufacturer or fabricator of the surface to be cleaned. Do not use cleaning agents that are potentially hazardous to health or property or that might damage finished surfaces.

PART 3 - EXECUTION

3.1 EXAMINATION

A. Existing Conditions: The existence and location of underground and other utilities and construction indicated as existing are not guaranteed. Before beginning sitework, investigate and verify the existence and location of underground utilities, **mechanical and electrical systems,** and other construction affecting the Work.

1. Before construction, verify the location and invert elevation at points of connection of sanitary sewer, storm sewer, gas service piping, and water-service piping; underground electrical services; and other utilities.
2. Furnish location data for work related to Project that must be performed by public utilities serving Project site.

B. Examination and Acceptance of Conditions: Before proceeding with each component of the Work, examine substrates, areas, and conditions, with Installer or Applicator present where indicated, for compliance with requirements for installation tolerances and other conditions affecting performance. Record observations.

1. Examine roughing-in for mechanical and electrical systems to verify actual locations of connections before equipment and fixture installation.
2. Examine walls, floors, and roofs for suitable conditions where products and systems are to be installed.
3. Verify compatibility with and suitability of substrates, including compatibility with existing finishes or primers.

C. Written Report: Where a written report listing conditions detrimental to performance of the Work is required by other Sections, include the following:

1. Description of the Work, including Specification Section number and paragraph, and Drawing sheet number and detail, where applicable.
2. List of detrimental conditions, including substrates.
3. List of unacceptable installation tolerances.
4. Recommended corrections.

D. Proceed with installation only after unsatisfactory conditions have been corrected. Proceeding with the Work indicates acceptance of surfaces and conditions.

3.2 PREPARATION

A. Existing Utility Information: Furnish information to **Owner** that is necessary to adjust, move, or relocate existing utility structures, utility poles, lines, services, or other utility appurtenances located in or affected by construction. Coordinate with authorities having jurisdiction.

B. Field Measurements: Take field measurements as required to fit the Work properly. Recheck measurements before installing each product. Where portions of the Work are indicated to fit to other construction, verify dimensions of other construction by field measurements before fabrication. Coordinate fabrication schedule with construction progress to avoid delaying the Work.

C. Space Requirements: Verify space requirements and dimensions of items shown diagrammatically on Drawings.

D. Review of Contract Documents and Field Conditions: Immediately on discovery of the need for clarification of the Contract Documents, submit a request for information to Architect **through Construction Manager** in accordance with requirements in Section 013100 "Project Management and Coordination."

3.3 CONSTRUCTION LAYOUT

A. Verification: Before proceeding to lay out the Work, verify layout information shown on Drawings, in relation to the property survey and existing benchmarks and existing conditions. If discrepancies are discovered, notify Architect **and Construction Manager** promptly.

B. Engage a **land surveyor** experienced in laying out the Work, using the following accepted surveying practices:

1. Establish benchmarks and control points to set lines and levels at each story of construction and elsewhere as needed to locate each element of Project.
2. Establish limits on use of Project site.
3. Establish dimensions within tolerances indicated. Do not scale Drawings to obtain required dimensions.
4. Inform installers of lines and levels to which they must comply.
5. Check the location, level and plumb, of every major element as the Work progresses.
6. Notify Architect **and Construction Manager** when deviations from required lines and levels exceed allowable tolerances.
7. Close site surveys with an error of closure equal to or less than the standard established by authorities having jurisdiction.

C. Building Lines and Levels: Locate and lay out control lines and levels for structures, building foundations, column grids, and floor levels, including those required for mechanical and electrical work. Transfer survey markings and elevations for use with control lines and levels. Level foundations and piers from two or more locations.

D. Record Log: Maintain a log of layout control work. Record deviations from required lines and levels. Include beginning and ending dates and times of surveys, weather conditions, name and duty of each survey party member, and types of instruments and tapes used. Make the log available for reference by Architect **and Construction Manager**.

3.4 FIELD ENGINEERING

A. Reference Points: Locate existing permanent benchmarks, control points, and similar reference points before beginning the Work. Preserve and protect permanent benchmarks and control points during construction operations.

1. Do not change or relocate existing benchmarks or control points without prior written approval of Architect **or Construction Manager**. Report lost or destroyed permanent benchmarks or control points promptly. Report the need to relocate permanent benchmarks or control points to Architect **and Construction Manager** before proceeding.
2. Replace lost or destroyed permanent benchmarks and control points promptly. Base replacements on the original survey control points.

3.5 INSTALLATION

A. Locate the Work and components of the Work accurately, in correct alignment and elevation, as indicated.

1. Make vertical work plumb, and make horizontal work level.
2. Where space is limited, install components to maximize space available for maintenance and ease of removal for replacement.
3. Conceal pipes, ducts, and wiring in finished areas unless otherwise indicated.
4. Maintain minimum headroom clearance of **96 inches (2440 mm)** in occupied spaces and **90 inches (2300 mm)** in unoccupied spaces, unless otherwise indicated on Drawings.

B. Comply with manufacturer's written instructions and recommendations for installing products in applications indicated.

C. Install products at the time and under conditions that will ensure satisfactory results as judged by the Architect. Maintain conditions required for product performance until Substantial Completion. Do not proceed with installation of finish systems when temperature, humidity, or substrate conditions are outside manufacturer’s recommended limits.

D. Conduct construction operations, so no part of the Work is subjected to damaging operations or loading in excess of that expected during normal conditions of occupancy of type expected for Project.

E. Sequence the Work and allow adequate clearances to accommodate movement of construction items on-site and placement in permanent locations.

F. Tools and Equipment: Select tools or equipment that minimize production of excessive noise levels.

G. Templates: Obtain and distribute to the parties involved templates for Work specified to be factory prepared and field installed. Check Shop Drawings of other portions of the Work to confirm that adequate provisions are made for locating and installing products to comply with indicated requirements.

H. Attachment: Provide blocking and attachment plates and anchors and fasteners of adequate size and number to securely anchor each component in place, accurately located and aligned with other portions of the Work. Where size and type of attachments are not indicated, verify size and type required for load conditions with manufacturer.

1. Mounting Heights: Where mounting heights are not indicated, mount components at heights directed by Architect.
2. Allow for building movement, including thermal expansion and contraction.
3. Coordinate installation of anchorages. Furnish setting drawings, templates, and directions for installing anchorages, including sleeves, concrete inserts, anchor bolts, and items with integral anchors, that are to be embedded in concrete or masonry. Deliver such items to Project site in time for installation.

I. Joints: Make joints of uniform width. Where joint locations in exposed Work are not indicated, arrange joints for the best visual effect, as judged by Architect. Fit exposed connections together to form hairline joints.

3.6 CUTTING AND PATCHING

A. General: Employ skilled workers to perform cutting and patching. Proceed with cutting and patching at the earliest feasible time, and complete without delay.

1. Cut in-place construction to provide for installation of other components or performance of other construction, and subsequently patch as required to restore surfaces to their original condition.

B. Existing Warranties: Remove, replace, patch, and repair materials and surfaces cut or damaged during installation or cutting and patching operations, by methods and with materials so as not to void existing warranties.

C. Temporary Support: Provide temporary support of Work to be cut.

D. Protection: Protect in-place construction during cutting and patching to prevent damage. Provide protection from adverse weather conditions for portions of Project that might be exposed during cutting and patching operations.

E. Adjacent Occupied Areas: Where interference with use of adjoining areas or interruption of free passage to adjoining areas is unavoidable, coordinate cutting and patching in accordance with requirements of the Contract Documents.

F. Existing Utility Services and Mechanical/Electrical Systems: Where existing services/systems are required to be removed, relocated, or abandoned, bypass such services/systems before cutting to **minimize** interruption to occupied areas.

G. Cutting: Cut in-place construction by sawing, drilling, breaking, chipping, grinding, and similar operations, including excavation, using methods least likely to damage elements retained or adjoining construction. If possible, review proposed procedures with original Installer; comply with original Installer's written recommendations.

1. In general, use hand or small power tools designed for sawing and grinding, not hammering and chopping. Cut holes and slots neatly to minimum size required, and with minimum disturbance of adjacent surfaces. Temporarily cover openings when not in use.
2. Finished Surfaces: Cut or drill from the exposed or finished side into concealed surfaces.
3. **Concrete and Masonry**: Cut using a cutting machine, such as an abrasive saw or a diamond-core drill.
4. Excavating and Backfilling: Comply with requirements in applicable Sections where required by cutting and patching operations.
5. Mechanical and Electrical Services: Cut off pipe or conduit in walls or partitions to be removed. Cap, valve, or plug and seal remaining portion of pipe or conduit to prevent entrance of moisture or other foreign matter after cutting.
6. Proceed with patching after construction operations requiring cutting are complete.

H. Patching: Patch construction by filling, repairing, refinishing, closing up, and similar operations following performance of other Work. Patch with durable seams that are as invisible as practicable, as judged by Architect. Provide materials and comply with installation requirements specified in other Sections, where applicable.

1. Inspection: Where feasible, test and inspect patched areas after completion to demonstrate physical integrity of installation.
2. Exposed Finishes: Restore exposed finishes of patched areas and extend finish restoration into retained adjoining construction in a manner that will eliminate evidence of patching and refinishing.

    a. Clean piping, conduit, and similar features before applying paint or other finishing materials.
    b. Restore damaged pipe covering to its original condition.

3. Floors and Walls: Where walls or partitions that are removed extend one finished area into another, patch and repair floor and wall surfaces in the new space. Provide an even surface of uniform finish, color, texture, and appearance. Remove in-place floor and wall coverings and replace with new materials, if necessary, to achieve uniform color and appearance.

    a. Where patching occurs in a painted surface, prepare substrate and apply primer and intermediate paint coats appropriate for substrate over the patch, and apply final paint coat over entire unbroken surface containing the patch, corner to corner of wall and edge to edge of ceiling. Provide additional coats until patch blends with adjacent surfaces.

4. Ceilings: Patch, repair, or rehang in-place ceilings as necessary to provide an even-plane surface of uniform appearance.
5. Exterior Building Enclosure: Patch components in a manner that restores enclosure to a weathertight condition and ensures thermal and moisture integrity of building enclosure.

I. Cleaning: Clean areas and spaces where cutting and patching are performed. Remove paint, mortar, oils, putty, and similar materials from adjacent finished surfaces.

3.7 COORDINATION OF OWNER'S PORTION OF THE WORK

A. Site Access: Provide access to Project site for Owner's construction personnel **and Owner's separate contractors**.

B. Coordination: Coordinate construction and operations of the Work with work performed by Owner's construction personnel **and Owner's separate contractors**.

1. Construction Schedule: Inform Owner of Contractor's preferred construction schedule for Owner's portion of the Work. Adjust construction schedule based on a mutually agreeable timetable. Notify Owner if changes to schedule are required due to differences in actual construction progress.

3.8 PROGRESS CLEANING

A. Clean Project site and work areas daily, including common areas. Enforce requirements strictly. Dispose of materials lawfully.

1. Comply with requirements in NFPA 241 for removal of combustible waste materials and debris.
2. Do not hold waste materials more than seven days during normal weather or three days if the temperature is expected to rise above 80 deg F (27 deg C).
3. Containerize hazardous and unsanitary waste materials separately from other waste. Mark containers appropriately and dispose of legally, in accordance with regulations.

    a. Use containers intended for holding waste materials of type to be stored.

4. Coordinate progress cleaning for joint-use areas where Contractor and other contractors are working concurrently.

B. Site: Maintain Project site free of waste materials and debris.

C. Work Areas: Clean areas where Work is in progress to the level of cleanliness necessary for proper execution of the Work.

1. Remove liquid spills promptly.
2. Where dust would impair proper execution of the Work, broom-clean or vacuum the entire work area, as appropriate.

D. Installed Work: Keep installed work clean. Clean installed surfaces in accordance with written instructions of manufacturer or fabricator of product installed, using only cleaning materials specifically recommended. If specific cleaning materials are not recommended, use cleaning materials that are not hazardous to health or property and that will not damage exposed surfaces. Protect finished restroom surfaces from damage, staining, and construction traffic immediately upon installation.

E. Concealed Spaces: Remove debris from concealed spaces before enclosing the space.

F. Exposed Surfaces: Clean exposed surfaces and protect as necessary to ensure freedom from damage and deterioration at time of Substantial Completion.

G. Waste Disposal: Do not bury or burn waste materials on-site. Do not wash waste materials down sewers or into waterways.

H. During handling and installation, clean and protect construction in progress and adjoining materials already in place. Apply protective covering where required to ensure protection from damage or deterioration at Substantial Completion.

I. Clean and provide maintenance on completed construction as frequently as necessary through the remainder of the construction period. Adjust and lubricate operable components to ensure operability without damaging effects.

J. Limiting Exposures: Supervise construction operations to ensure that no part of the construction, completed or in progress, is subject to harmful, dangerous, damaging, or otherwise deleterious exposure during the construction period.

3.9 STARTING AND ADJUSTING

A. Start equipment and operating components to confirm proper operation. Remove malfunctioning units, replace with new units, and retest.

B. Adjust equipment for proper operation. Adjust operating components for proper operation without binding.

C. Test each piece of equipment to verify proper operation. Test and adjust controls and safeties. Replace damaged and malfunctioning controls and equipment.

D. Manufacturer's Field Service: Comply with qualification requirements in Section 014000 "Quality Requirements."

3.10 PROTECTION OF INSTALLED CONSTRUCTION

A. Provide final protection and maintain conditions that ensure installed Work is without damage or deterioration at time of Substantial Completion.

B. Protection of Existing Items: Provide protection and ensure that existing items to remain undisturbed by construction are maintained in condition that existed at commencement of the Work.

C. Comply with manufacturer's written instructions for temperature and relative humidity.

3.11 CORRECTION OF THE WORK

A. Repair or remove and replace damaged, defective, or nonconforming Work. Restore damaged substrates and finishes.

1. Repairing includes replacing defective parts, refinishing damaged surfaces, touching up with matching materials, and properly adjusting operating equipment.

B. Repair Work previously completed and subsequently damaged during construction period. Repair to like-new condition.

C. Restore permanent facilities used during construction to their specified condition.

D. Remove and replace damaged surfaces that are exposed to view if surfaces cannot be repaired without visible evidence of repair.

E. Repair components that do not operate properly. Remove and replace operating components that cannot be repaired.

F. Remove and replace chipped, scratched, and broken glass or reflective surfaces.

END OF SECTION 01 73 00

DIVISION 01 – GENERAL CONDITIONS
SECTION 01 77 00
CLOSEOUT PROCEDURES

PART 1 - GENERAL

1.1 SECTION INCLUDES

A. Project requirements to be fulfilled near the end of Contract Time in preparation for final acceptance and occupancy of the Work by the Owner.

1.2 RELATED SECTIONS

A. Section 013300 - Submittals.

B. Section 014000 - Quality Requirements.

C. Section 015000 - Construction Facilities and Temporary Controls.

D. Specific additional requirements for individual units of Work are included in the associated Specifications Sections.

E. Section 012513 – Product Substitution Procedures.

1.3 COORDINATION

A. Each Contractor and subcontractor shall comply with provisions of this Section.

B. Subcontractors shall make all submittals and requests specified in this Section to Contractor as required. Contractor shall:

1. Keep a log of all submittals and requests.
2. Review all submittals and requests.
3. Transmit submittals and requests to Construction Manager with a cover letter itemizing all submittals and requests being transmitted along with a statement indicating for each item Contractor's best judgment as to the appropriateness of the submittal or request.

1.4 QUALITY ASSURANCE

A. Prior to requesting inspection, Contractor shall review Work and confirm that the Work is completed in accordance with the specified requirements and is ready for the requested inspection. Confirm that finish systems are complete, uniform in appearance, and free of damage prior to requesting inspection.

1.5 PREREQUISITES TO SUBSTANTIAL COMPLETION

A. General: Before requesting inspection for Certificate of Substantial Completion, either for all the Work or for portions of the Work, complete the following items. List known exceptions in the request.

1. Deliver to the Architect a comprehensive list of items, jointly prepared by the Contractor and the Construction Manager, to be completed or corrected prior to final payment.
2. In the progress payment request that coincides with, or is the first request following, the date Substantial Completion is claimed, show either 100% completion for the portion of the Work claimed as substantially complete, or list incomplete items, the value of incomplete work, and the reasons for the incomplete work. Include supporting documents for completion that are required by the Contract Documents. Include a statement showing an accounting of changes to the Contract Sum to date.
3. Advise the Owner and Construction Manager of pending insurance change– over requirements and provisions for continuing the performance bond through the warranty period.
4. Submit specific warranties, guarantees, workmanship/maintenance bonds, maintenance agreements, final certifications, and similar documents for those items whose warranties, guarantees, bonds, etc. commence on the date of Substantial Completion.
5. Discontinue or change over and remove temporary facilities and services from the Project Site, along with construction tools and facilities, and similar elements.
6. Complete cleaning requirements. Cleaning shall include removal of all construction residue from all finished restroom surfaces, including flooring, wall finishes, partitions, accessories, and decorative metal elements.
7. Deliver attic stock and spare materials required by the specifications, including but not limited to ceiling panels, flooring materials, and accessories, clearly labeled and turned over to the owner.

B. Inspection Procedures:
1. Upon receipt of Contractor's request for inspection, the Construction Manager and Architect will either proceed with inspection or advise the Contractor of unfilled prerequisites.
2. Following initial inspection, the Construction Manager and Architect will prepare the Certificate of Substantial Completion or will advise Contractor of Work which must be performed before the Certificate can be issued. Construction Manager and Architect will repeat the inspection when requested and when assured that the Work is substantially complete.
3. Results of the completed inspection will form the initial punch list for final acceptance.

1.6 PREREQUISITES TO FINAL COMPLETION

A. General: Before requesting final inspection for Certificate of Final Acceptance and final payment, complete the following items. List known exceptions, if any, in the request..

1. Notice to the Construction Manager that the Work is ready for final inspection and acceptance.
2. Submit in form and substance reasonably satisfactory to the Owner (1) an affidavit that payrolls, bills for materials and equipment, and other indebtedness connected with the

Work for which the Owner or the Owner's property might be responsible or encumbered (less amounts withheld by Owner) have been paid or otherwise satisfied, (2) a certificate evidencing that insurance required by the Contract Documents to remain in force after final payment is currently in effect, (3) a written statement that the Contractor knows of no reason that the insurance will not be renewable to cover the period required by the Contract Documents, (4) consent of surety, if any, to final payment (5) documentation of any special warranties, such as manufacturers' warranties or specific Subcontractor warranties, and (6), if required by the Owner, other data establishing payment or satisfaction of obligations, such as receipts and releases and waivers of liens, claims, security interests, or encumbrances arising out of the Contract, to the extent and in such form as may be designated by the Owner.

3. Submit the final payment request with final releases and supporting documentation not previously submitted and accepted. Include certificates of insurance for products and completed operations where required. Include an updated final statement accounting for final additional changes to the Contract Sum.
4. Submit a copy of the Construction Manager and Architect's final punch list stating that each item is complete or otherwise resolved for acceptance.
5. Submit consent of Surety.
6. Submit evidence of final, continuing insurance coverage complying with the insurance requirements of the Conditions of the Contract.
7. Submit affidavits as required by the Ohio Mechanics lien law.
8. Submit Prevailing Wage Compliance Certificates.
9. Submit Record Documents, final project photographs, survey(s) and similar final record information.

B. Re-inspection Procedure:

1. Construction Manager and Architect will re-inspect the Work upon receipt of Contractor's notice that the Work, including punch list items resulting from earlier inspections, is complete except for those items whose completion was delayed because of circumstances acceptable to the Owner.
2. Upon completion of re-inspection, the Construction Manager and Architect will either prepare a certificate of final acceptance, or they will advise Contractor of Work that is incomplete or of obligations not fulfilled, but required, for final acceptance.
3. If necessary, the re-inspection procedure will be repeated.

1.7 PROJECT RECORD DOCUMENTS

A. Provide Record Documents in electronic format to the Construction Manager for all aspects of the Project.

1. Show all changes from the Contract Documents made during the Work. Unless noted otherwise, indicate changes in red notations on pdf's of Construction Documents. Make notations in a neat and legible manner on the pdf's, with additional explanatory drawings or sketches as necessary.
2. Submit Record Documents in electronic formats described in Section 011100 – Summary of Work and the Contract Documents.

B. Record Documents shall be complete and incorporate information from subcontractors. Ensure that Record Documents indicate the following:

1. Correct location of Work items and equipment where it differs from the location shown on Drawings.
2. Survey information, specifically including existing foundation and utility locations.
3. Specific items and requirements listed in individual specification Sections.
4. Other information of a pertinent or useful nature.

C. Submit the completed set of Record Documents as specified in 1.7.A above, unless noted otherwise within individual specification Sections.

D. Refer also to individual specification Sections for specific additional requirements for Record Documents.

1.8 GUARANTEES AND WARRANTIES

A. Before request for inspection for Substantial Completion, submit to the Construction Manager the certificates of guarantee and warranty required by the Specifications.

1.9 CLOSEOUT PROCEDURES

A. Except as otherwise indicated or requested by the Construction Manager, remove temporary protection devices and facilities installed during the Work to protect existing or previously completed Work.

B. Comply with safety standards and governing regulations for cleaning operations. Do not discharge volatile, harmful, or dangerous materials into drainage systems. Remove waste materials from the Project Site and dispose of in a lawful manner. Where extra materials remain after completion of associated work, dispose of these materials as directed by the Construction Manager.

1.10 PROJECT CLOSEOUT SUBMITTAL CHECKLIST

A. Each Contractor and subcontractor shall submit to Construction Manager its portion of the following documents, as applicable, in accordance with all requirements of the Contract Documents:

1. Project Record Documents (As-Builts)
2. Guarantees, warranties and bonds.
3. Affidavits.
4. Evidence of compliance with requirements of governing authorities as applicable.
5. Release of liens and other related project closeout data, as indicated in the Contract Documents.

PART 2 - PRODUCTS (Not Used)

PART 3 - EXECUTION (Not Used)

END OF SECTION 01 77 00

DIVISION 01 – GENERAL CONDITIONS
SECTION 01 78 23
OPERATION AND MAINTENANCE DATA

PART 1 - GENERAL

1.1 SUMMARY

A. Section includes administrative and procedural requirements for preparing operation and maintenance manuals. Operation and maintenance data requirements are limited to systems, equipment, products, and finishes furnished or modified as part of this Project. Including the following:

1. Operation and maintenance documentation directory manuals.
2. Emergency manuals.
3. Systems and equipment operation manuals.
4. Systems and equipment maintenance manuals.
5. Product maintenance manuals.

1.2 CLOSEOUT SUBMITTALS

A. Submit operation and maintenance manuals indicated. Provide content for each manual as specified in individual Specification Sections, and as reviewed and approved at the time of Section submittals. Submit reviewed manual content formatted and organized as required by this Section.
   1. Architect and Commissioning Authority will review operation and maintenance submittals for general conformance with the Contract Documents. Such review does not constitute approval of substitutions, deviations, or changes to the Contract Documents.
   2. Where applicable, clarify and update reviewed manual content to correspond to revisions and field conditions.

B. Format: Submit operation and maintenance manuals in the following format:

   1. Submit by uploading to web-based project software site. Enable reviewer comments on draft submittals.
   2. Submit three paper copies. Architect will return two copies.

C. Final Manual Submittal: Submit each manual in final form prior to requesting inspection for Substantial Completion and at least 15 days before commencing demonstration and training. Architect and Commissioning Authority will return copy with comments.

   1. Correct or revise each manual to comply with Architect's and Commissioning Authority's comments. Submit copies of each corrected manual within 15 days of receipt of Architect's and Commissioning Authority's comments and prior to commencing demonstration and training.

D. Comply with Section 017700 "Closeout Procedures" for schedule for submitting operation and maintenance documentation. Failure to provide complete and acceptable operation and maintenance data in accordance with this Section shall delay Substantial Completion.

1.3 FORMAT OF OPERATION AND MAINTENANCE MANUALS

A. Manuals, Electronic Files: Submit manuals in the form of a multiple file composite electronic PDF file for each manual type required.

1. Electronic Files: Use electronic files prepared by manufacturer where available. Where scanning of paper documents is required, configure scanned file for minimum readable file size.
2. File Names and Bookmarks: Bookmark individual documents based on file names. Name document files to correspond to system, subsystem, and equipment names used in manual directory and table of contents. Group documents for each system and subsystem into individual composite bookmarked files, then create composite manual, so that resulting bookmarks reflect the system, subsystem, and equipment names in a readily navigated file tree. Configure electronic manual to display bookmark panel on opening file.

B. Manuals, Paper Copy: Submit manuals in the form of hard-copy, bound and labeled volumes.

1. Binders: Heavy-duty, three-ring, vinyl-covered, loose-leaf binders, in thickness necessary to accommodate contents, sized to hold 8-1/2-by-11-inch (215-by-280-mm) paper; with clear plastic sleeve on spine to hold label describing contents and with pockets inside covers to hold folded oversize sheets.
2. Drawings: Attach reinforced, punched binder tabs on drawings and bind with text.

   a. If oversize drawings are necessary, fold drawings to same size as text pages and use as foldouts.
   b. If drawings are too large to be used as foldouts, fold and place drawings in labeled envelopes and bind envelopes in rear of manual. At appropriate locations in manual, insert typewritten pages indicating drawing titles, descriptions of contents, and drawing locations.

1.4 REQUIREMENTS FOR EMERGENCY, OPERATION, AND MAINTENANCE MANUALS

A. Organization of Manuals: Unless otherwise indicated, organize each manual into a separate section for each system and subsystem, and a separate section for each piece of equipment not part of a system. Each manual shall contain the following materials, in the order listed:

1. Title page.
2. Table of contents.
3. Manual contents.

B. Title Page: Include the following information:

1. Subject matter included in manual.
2. Name and address of Project.

3. Name and address of Owner.
4. Date of submittal.
5. Name and contact information for Contractor.
6. Name and contact information for Architect.
7. Name and contact information for Commissioning Authority.
8. Names and contact information for major consultants to the Architect that designed the systems contained in the manuals.
9. Cross-reference to related systems in other operation and maintenance manuals.

C. Table of Contents: List each product included in manual, identified by product name, indexed to the content of the volume, and cross-referenced to Specification Section number in Project Manual.

D. Manual Contents: Organize into sets of manageable size. Arrange contents alphabetically by system, subsystem, and equipment. If possible, assemble instructions for subsystems, equipment, and components of one system into a single binder.

E. Identification: In the documentation directory and in each operation and maintenance manual, identify each system, subsystem, and piece of equipment with same designation used in the Contract Documents. If no designation exists, assign a designation according to ASHRAE Guideline 4, "Preparation of Operating and Maintenance Documentation for Building Systems."

1.5 EMERGENCY MANUALS

A. Emergency manuals are required only for systems and conditions applicable to the Work provided under this Contract

1.6 SYSTEMS AND EQUIPMENT OPERATION MANUALS

A. Systems and Equipment Operation Manual: Assemble a complete set of data indicating operation of each system, subsystem, and piece of equipment not part of a system. Include information required for daily operation and management, operating standards, and routine and special operating procedures.

B. Content: In addition to requirements in this Section, include operation data required in individual Specification Sections and the following information:

1. System, subsystem, and equipment descriptions. Use designations for systems and equipment indicated on Contract Documents.
2. Performance and design criteria if Contractor has delegated design responsibility.
3. Operating standards.
4. Operating procedures.
5. Operating logs.
6. Wiring diagrams.
7. Control diagrams.
8. Piped system diagrams.
9. Precautions against improper use.

10. License requirements including inspection and renewal dates.

C. Descriptions: Include the following:

1. Product name and model number. Use designations for products indicated on Contract Documents.
2. Manufacturer's name.
3. Equipment identification with serial number of each component.
4. Equipment function.
5. Operating characteristics.
6. Limiting conditions.
7. Performance curves.
8. Engineering data and tests.
9. Complete nomenclature and number of replacement parts.

D. Operating Procedures: Include the following, as applicable:

1. Startup procedures.
2. Equipment or system break-in procedures.
3. Routine and normal operating instructions.
4. Regulation and control procedures.
5. Instructions on stopping.
6. Normal shutdown instructions.
7. Seasonal and weekend operating instructions.
8. Required sequences for electric or electronic systems.
9. Special operating instructions and procedures.

E. Systems and Equipment Controls: Describe the sequence of operation, and diagram controls as installed.

F. Piped Systems: Diagram piping as installed, and identify color coding where required for identification.

1.7 SYSTEMS AND EQUIPMENT MAINTENANCE MANUALS

A. Systems and Equipment Maintenance Manuals: Assemble a complete set of data indicating maintenance of each system, subsystem, and piece of equipment not part of a system. Include manufacturers' maintenance documentation, preventive maintenance procedures and frequency, repair procedures, wiring and systems diagrams, lists of spare parts, and warranty information.

B. Content: For each system, subsystem, and piece of equipment not part of a system, include source information, manufacturers' maintenance documentation, maintenance procedures, maintenance and service schedules, spare parts list and source information, maintenance service contracts, and warranties and bonds, as described below.

C. Manufacturers' Maintenance Documentation: Include the following information for each component part or piece of equipment:

1. Standard maintenance instructions and bulletins; include only sheets pertinent to product or component installed. Mark each sheet to identify each product or component incorporated into the Work. If data include more than one item in a tabular format, identify each item using appropriate references from the Contract Documents. Identify data applicable to the Work and delete references to information not applicable.

    a. Prepare supplementary text if manufacturers' standard printed data are not available and where the information is necessary for proper operation and maintenance of equipment or systems.

2. Drawings, diagrams, and instructions required for maintenance, including disassembly and component removal, replacement, and assembly.
3. Identification and nomenclature of parts and components.
4. List of items recommended to be stocked as spare parts.

D. Maintenance Procedures: Include the following information and items that detail essential maintenance procedures:

1. Test and inspection instructions.
2. Troubleshooting guide.
3. Precautions against improper maintenance.
4. Disassembly; component removal, repair, and replacement; and reassembly instructions.
5. Aligning, adjusting, and checking instructions.
6. Demonstration and training video recording, if available.

E. Maintenance and Service Schedules: Include service and lubrication requirements, list of required lubricants for equipment, and separate schedules for preventive and routine maintenance and service with standard time allotment.

F. Spare Parts List and Source Information: Include lists of replacement and repair parts, with parts identified and cross-referenced to manufacturers' maintenance documentation and local sources of maintenance materials and related services.

G. Warranties and Bonds: Include copies of warranties and bonds and lists of circumstances and conditions that would affect validity of warranties or bonds. Warranty documentation shall be consistent with warranties required under Section 01 77 00 and applicable technical Specification Sections.

1. Include procedures to follow and required notifications for warranty claims.

H. Drawings: Prepare drawings supplementing manufacturers' printed data to illustrate the relationship of component parts of equipment and systems and to illustrate control sequence and flow diagrams. Coordinate these drawings with information contained in record Drawings to ensure correct illustration of completed installation.

1.8 PRODUCT MAINTENANCE MANUALS

A. Product Maintenance Manual: Assemble a complete set of maintenance data indicating care and maintenance of each product, material, and finish incorporated into the Work. Product

maintenance manuals shall include cleaning agents, methods, and maintenance procedures suitable for high-traffic public restroom environments.

B. Content: Organize manual into a separate section for each product, material, and finish. Include source information, product information, maintenance procedures, repair materials and sources, and warranties and bonds, as described below.

C. Product Information: Include the following, as applicable:

1. Product name and model number.
2. Manufacturer's name.
3. Color, pattern, and texture.
4. Material and chemical composition.
5. Reordering information for specially manufactured products.

D. Maintenance Procedures: Include manufacturer's written recommendations and the following:

1. Inspection procedures.
2. Types of cleaning agents to be used and methods of cleaning.
3. List of cleaning agents and methods of cleaning detrimental to product.
4. Schedule for routine cleaning and maintenance.
5. Repair instructions.

E. Repair Materials and Sources: Include lists of materials and local sources of materials and related services.

F. Warranties and Bonds: Include copies of warranties and bonds and lists of circumstances and conditions that would affect validity of warranties or bonds. Warranty documentation shall be consistent with warranties required under Section 01 77 00 and applicable technical Specification Sections.

1. Include procedures to follow and required notifications for warranty claims.

PART 2 - PRODUCTS (Not Used)

PART 3 - EXECUTION (Not Used)

END OF SECTION 01 78 23

DIVISION 01 – GENERAL CONDITIONS
SECTION 01 78 39
PROJECT RECORD DOCUMENTS

PART 1 - GENERAL

1.1 SUMMARY

A. Project Record Documents are required only for Work, systems, finishes, and equipment furnished, modified, or affected by the General Admission restroom renovations. Section includes administrative and procedural requirements for Project Record Documents, including the following:

1. Record Drawings.
2. Record specifications.
3. Record Product Data.

B. Related Requirements:

1. Section 017823 "Operation and Maintenance Data" for operation and maintenance manual requirements.

1.2 CLOSEOUT SUBMITTALS

A. Record Drawings: Comply with the following:

1. Number of Copies: Submit one set of marked-up record prints.
2. Number of Copies: Submit copies of Record Drawings as follows:

a. Initial Submittal:

1) Submit PDF electronic files of scanned record prints and two set(s) of file prints.

b. Final Submittal:

1) Submit PDF electronic files of scanned Record Prints and two set(s) of file prints.
2) Print each drawing, whether or not changes and additional information were recorded.

B. Record Specifications: Submit two paper copies and annotated PDF electronic files of Project's Specifications, including addenda and contract modifications.

C. Record Product Data: Submit two paper copies and annotated PDF electronic files and directories of each submittal.

1. Where record Product Data are required as part of operation and maintenance manuals, submit duplicate marked-up Product Data as a component of manual.

1.3 RECORD DRAWINGS

A. Record Prints: Maintain one set of marked-up paper copies of the Contract Drawings and Shop Drawings, incorporating new and revised drawings as modifications are issued.

1. Preparation: Mark record prints to show the actual installation, where installation varies from that shown originally. Require individual or entity who obtained record data, whether individual or entity is Installer, subcontractor, or similar entity, to provide information for preparation of corresponding marked-up record prints.

    a. Give particular attention to information on concealed elements that would be difficult to identify or measure and record later.
    b. Accurately record information in an acceptable drawing technique.
    c. Record data as soon as possible after obtaining it.
    d. Record and check the markup before enclosing concealed installations.
    e. Cross-reference record prints to corresponding photographic documentation.

2. For this Project, record information shall focus on restroom layouts, partition locations, wall construction, finish extents, ceiling systems, lighting, plumbing fixture locations, and other Work modified by the renovation. Content: Types of items requiring marking include, but are not limited to, the following:

    a. Dimensional changes to Drawings.
    b. Revisions to details shown on Drawings.
    c. Depths of foundations.
    d. Locations and depths of underground utilities.
    e. Revisions to routing of piping and conduits.
    f. Revisions to electrical circuitry.
    g. Actual equipment locations.
    h. Duct size and routing.
    i. Locations of concealed internal utilities.
    j. Changes made by Change Order or Construction Change Directive.
    k. Changes made following Architect's written orders.
    l. Details not on the original Contract Drawings.
    m. Field records for variable and concealed conditions.
    n. Record information on the Work that is shown only schematically.

3. Mark the Contract Drawings and Shop Drawings completely and accurately. Use personnel proficient at recording graphic information in production of marked-up record prints.
4. Mark record prints with erasable, red-colored pencil. Use other colors to distinguish between changes for different categories of the Work at same location.
5. Mark important additional information that was either shown schematically or omitted from original Drawings.
6. Note Construction Change Directive numbers, alternate numbers, Change Order numbers, and similar identification, where applicable.

B. Record Digital Data Files: Prepare Record Digital Data Files based on marked-up record prints immediately prior to inspection for Substantial Completion. Contractor is solely responsible for the accuracy and completeness of Project Record Documents. Refer questions of interpretation to the Architect.
   1. Retain one of three "Format" subparagraphs below.

   2. Format: Annotated PDF electronic file with comment function enabled.
   3. Incorporate changes and additional information previously marked on record prints. Delete, redraw, and add details and notations where applicable.
   4. Refer instances of uncertainty to Architect for resolution.
   5. Architect will furnish Contractor with one set of digital data files of the Contract Drawings for use in recording information.

C. Format: Identify and date each Record Drawing; include the designation "PROJECT RECORD DRAWING" in a prominent location.

   1. Record Prints: Organize record prints into manageable sets. Bind each set with durable paper cover sheets. Include identification on cover sheets.
   2. Format: Annotated PDF electronic file.
   3. Record Digital Data Files: Organize digital data information into separate electronic files that correspond to each sheet of the Contract Drawings. Name each file with the sheet identification. Include identification in each digital data file.
   4. Identification: As follows:

      a. Project name.
      b. Date.
      c. Designation "PROJECT RECORD DRAWINGS."
      d. Name of Architect.
      e. Name of Contractor.

1.4 RECORD SPECIFICATIONS

A. Preparation: Mark Specifications to indicate the actual product installation, where installation varies from that indicated in Specifications, addenda, and Contract modifications. Recording of substituted or revised products shall not constitute approval of such substitutions unless separately approved in writing in accordance with Section 01 25 13.

   1. Give particular attention to information on concealed products and installations that cannot be readily identified and recorded later.
   2. Mark copy with the proprietary name and model number of products, materials, and equipment furnished, including substitutions and product options selected.
   3. Record the name of manufacturer, supplier, Installer, and other information necessary to provide a record of selections made.
   4. For each principal product, indicate whether Record Product Data has been submitted in operation and maintenance manuals instead of submitted as Record Product Data.
   5. Note related Change Orders, Record Product Data, and Record Drawings where applicable.

B. Format: Submit record specifications as annotated PDF electronic file.

1.5 RECORD PRODUCT DATA

A. Recording: Maintain one copy of each submittal during the construction period for Project Record Document purposes. Post changes and revisions to Project Record Documents as they occur; do not wait until end of Project.

B. Preparation: Mark Product Data to indicate the actual product installation where installation varies substantially from that indicated in Product Data submittal.

1. Give particular attention to information on concealed products and installations that cannot be readily identified and recorded later.
2. Include significant changes in the product delivered to Project site and changes in manufacturer's written instructions for installation.
3. Note related Change Orders, Record Specifications, and Record Drawings where applicable.

C. Format: Submit Record Product Data as annotated PDF electronic file. Record Product Data shall be consistent with operation and maintenance data submitted under Section 01 78 23 and warranties submitted under Section 01 77 00.

1. Include Record Product Data directory organized by Specification Section number and title, electronically linked to each item of Record Product Data.

1.6 MAINTENANCE OF RECORD DOCUMENTS

A. Maintenance of Record Documents: Store Record Documents in the field office apart from the Contract Documents used for construction. Do not use Project Record Documents for construction purposes. Maintain Record Documents in good order and in a clean, dry, legible condition, protected from deterioration and loss. Provide access to Project Record Documents for Architect's reference during normal working hours. Failure to maintain Project Record Documents in accordance with this Section may delay Substantial Completion.

PART 2 - PRODUCTS (Not Used)

PART 3 - EXECUTION (Not Used)

END OF SECTION 01 78 39

SECTION 055000 - METAL FABRICATIONS

PART 1 - GENERAL

1.1 SUMMARY

A. Section Includes:

1. Miscellaneous framing and supports.

1.2 COORDINATION

A. Coordinate installation of metal fabrications that are anchored to or that receive other work. Furnish setting drawings, templates, and directions for installing anchorages, including sleeves, concrete inserts, anchor bolts, and items with integral anchors, that are to be embedded in concrete or masonry. Deliver such items to Project site in time for installation.

1.3 ACTION SUBMITTALS

A. Shop Drawings: Show fabrication and installation details. **Include plans, elevations, sections, and details of metal fabrications and their connections. Show anchorage and accessory items.** Provide Shop Drawings for the following:

1. Miscellaneous framing and supports for applications where framing and supports are not specified in other Sections.

B. Delegated Design Submittals:

1. Provide signed and sealed engineering calculations and drawings prepared by the Delegated Design Professional Engineer.
2. Calculations shall verify material grade, member sizing, plate thicknesses, connection design, weld design, and compliance with specified loads and deflection limits. INFORMATIONAL SUBMITTALS

C. Welding certificates.

D. Delegated design engineer qualifications.

1.4 QUALITY ASSURANCE

A. Welding Qualifications: Qualify procedures and personnel in accordance with the following welding codes:

1. AWS D1.1/D1.1M, "Structural Welding Code - Steel."
2. AWS D1.2/D1.2M, "Structural Welding Code - Aluminum."

DRAFT

3. AWS D1.6/D1.6M, "Structural Welding Code - Stainless Steel."

B. Professional Engineer Qualifications: Licensed in the project jurisdiction and experienced in steel plate, shape, and bar design.

1.5 FIELD CONDITIONS

A. Reliance on Existing Documentation: The specialty contractor shall perform all design, engineering, coordination, fabrication, and shop drawing preparation based solely on the existing construction documents provided for reference only. The specialty contractor is responsible for thoroughly reviewing all existing documents and incorporating those dimensions into the delegated design,and shall notify the Architect of any discrepancies or unclear conditions prior to proceeding. Any conditions not clearly defined in the available documents shall be treated as assumed conditions and explicitly identified as such within shop drawings and engineering submittals. The specialty contractor shall incorporate reasonable tolerances, adjustment strategies, and attachment flexibility to accommodate typical construction variances of existing structures.

1.6 DELEGATED DESIGN

A. Delegated Engineering:
1. The delegated designer shall engage a qualified Professional Engineer to design steel plates, shapes, and bars where delegated design is indicated, including but not limited to custom brackets, bearing plates, stiffeners, support frames, and connection assemblies.
2. Delegated design shall address only the performance and design requirements identified in the Contract Documents.

B. Submittals
1. Provide sealed drawings and calculations verifying design adequacy under required loads and conditions.
2. Submittals shall define material grades, dimensions, connection details, welds, tolerances, and interface conditions.

C. Coordination:
1. Coordinate delegated design with architectural and structural requirements of adjacent construction.

PART 2 - PRODUCTS

2.1 PERFORMANCE REQUIREMENTS

A. Thermal Movements: Allow for thermal movements from ambient and surface temperature changes.

1. Temperature Change: **120 deg F, ambient; 180 deg F, material surfaces**.

DRAFT

2.2 METALS

A. Metal Surfaces, General: Provide materials with smooth, flat surfaces unless otherwise indicated. For metal fabrications exposed to view in the completed Work, provide materials without seam marks, roller marks, rolled trade names, or blemishes.

B. Steel Plates, Shapes, and Bars: ASTM A36/A36M.

C. Steel Tubing: ASTM A500/A500M, cold-formed steel tubing.

D. Slotted Channel Framing: Cold-formed metal box channels (struts) complying with MFMA-4.
   1. Galvanized Steel: ASTM A653/A653M, [**commercial steel, Type B**] [**structural steel, Grade 33 (Grade 230)**], with G90 (Z275) coating; [**0.108-inch (2.8-mm)**] [**0.079-inch (2-mm)**] [**0.064-inch (1.6-mm)**] nominal thickness.

E. Aluminum Extrusions: ASTM B221 (ASTM B221M), Alloy 6063-T6.

2.3 FASTENERS

A. General: Unless otherwise indicated, provide **Type 304** stainless steel fasteners for exterior.

   1. Provide stainless steel fasteners for fastening **aluminum** or **stainless steel**

B. Steel Bolts and Nuts: Regular hexagon-head bolts, ASTM A307, Grade A (ISO 898-1, Property Class 4.6); with hex nuts, ASTM A563 (ASTM A563M); and, where indicated, flat washers.

C. High-Strength Bolts, Nuts, and Washers: ASTM F3125/F3125M, Grade A325 (Grade A325M), Type 3, heavy-hex steel structural bolts; ASTM A563, Grade DH3, (ASTM A563M, Class 10S3) heavy-hex carbon-steel nuts; and where indicated, flat washers.

D. Stainless Steel Bolts and Nuts: Regular hexagon-head annealed stainless steel bolts, ASTM F593 (ISO 3506-1); with hex nuts, ASTM F594 (ASTM F836M); and, where indicated, flat washers; Alloy **Group 1**.

E. Anchors, General: Capable of sustaining, without failure, a load equal to six times the load imposed when installed in unit masonry and four times the load imposed when installed in concrete, as determined by testing in accordance with ASTM E488/E488M, conducted by a qualified independent testing agency.

2.4 MISCELLANEOUS MATERIALS

A. Shop Primer for Galvanized Steel: Primer formulated for exterior use over zinc-coated metal and compatible with finish paint systems indicated.

B. Galvanizing Repair Paint: High-zinc-dust-content paint complying with SSPC-Paint 20 and compatible with paints specified to be used over it.

DRAFT

2.5 FABRICATION, GENERAL

A. Cut, drill, and punch metals cleanly and accurately. Remove burrs and ease edges to a radius of approximately 1/32 inch (1 mm) unless otherwise indicated. Remove sharp or rough areas on exposed surfaces.

B. Form bent-metal corners to smallest radius possible without causing grain separation or otherwise impairing work.

C. Form exposed work with accurate angles and surfaces and straight edges.

D. Weld corners and seams continuously to comply with the following:

1. Use materials and methods that minimize distortion and develop strength and corrosion resistance of base metals.
2. Obtain fusion without undercut or overlap.
3. Remove welding flux immediately.
4. At exposed connections, finish exposed welds and surfaces smooth and blended so no roughness shows after finishing **and contour of welded surface matches that of adjacent surface**.

E. Form exposed connections with hairline joints, flush and smooth, using concealed fasteners or welds where possible. Where exposed fasteners are required, use Phillips flat-head (countersunk) fasteners unless otherwise indicated. Locate joints where least conspicuous.

F. Fabricate seams and other connections that are exposed to weather in a manner to exclude water. Provide weep holes where water may accumulate.

G. Cut, reinforce, drill, and tap metal fabrications as indicated to receive finish hardware, screws, and similar items.

H. Provide for anchorage of type indicated; coordinate with supporting structure. Space anchoring devices to secure metal fabrications rigidly in place and to support indicated loads.

2.6 MISCELLANEOUS FRAMING AND SUPPORTS

A. General: Provide steel framing and supports not specified in other Sections as needed to complete the Work.

B. Fabricate units from steel shapes, plates, and bars of welded construction unless otherwise indicated. Fabricate to sizes, shapes, and profiles indicated and as necessary to receive adjacent construction.

1. Fabricate units from slotted channel framing where indicated.

C. Galvanize miscellaneous framing and supports where indicated.

D. Prime miscellaneous framing and supports with **zinc-rich primer** where indicated.

DRAFT

2.7 STEEL WELD PLATES AND ANGLES

A. Provide steel weld plates and angles not specified in other Sections, for items supported from concrete construction as needed to complete the Work. Provide each unit with no fewer than two integrally welded steel strap anchors for embedding in concrete.

2.8 GENERAL FINISH REQUIREMENTS

A. Finish metal fabrications after assembly.

B. Finish exposed surfaces to remove tool and die marks and stretch lines, and to blend into surrounding surface.

2.9 STEEL AND IRON FINISHES

A. Galvanizing: Hot-dip galvanize items as indicated to comply with ASTM A153/A153M for steel and iron hardware and with ASTM A123/A123M for other steel and iron products.

1. Do not quench or apply post galvanizing treatments that might interfere with paint adhesion.

B. Preparation for Shop Priming Galvanized Items: After galvanizing, thoroughly clean galvanized surfaces of grease, dirt, oil, flux, and other foreign matter, and treat with metallic phosphate process.

C. Shop prime iron and steel items unless they are to be embedded in concrete, sprayed-on fireproofing, or masonry, or unless otherwise indicated.

1. Shop prime with **universal shop primer** unless **zinc-rich primer is** indicated.

D. Preparation for Shop Priming: Prepare surfaces to comply with **requirements indicated below:**

1. Exterior Items: SSPC-SP 6/NACE No. 3, "Commercial Blast Cleaning."
2. Items Indicated to Receive Zinc-Rich Primer: SSPC-SP 6/NACE No. 3, "Commercial Blast Cleaning."
3. Other Steel Items: SSPC-SP 3, "Power Tool Cleaning."
4. Galvanized-Steel Items: SSPC-SP 16, "Brush-off Blast Cleaning of Coated and Uncoated Galvanized Steel, Stainless Steels, and Non-Ferrous Metals."

E. Shop Priming: Apply shop primer to comply with SSPC-PA 1, "Paint Application Specification No. 1: Shop, Field, and Maintenance Painting of Steel," for shop painting.

1. Stripe paint corners, crevices, bolts, welds, and sharp edges.

DRAFT

PART 3 - EXECUTION

3.1 INSTALLATION, GENERAL

A. Cutting, Fitting, and Placement: Perform cutting, drilling, and fitting required for installing metal fabrications. Set metal fabrications accurately in location, alignment, and elevation; with edges and surfaces level, plumb, true, and free of rack; and measured from established lines and levels.

B. Fit exposed connections accurately together to form hairline joints. Weld connections that are not to be left as exposed joints but cannot be shop welded because of shipping size limitations. Do not weld, cut, or abrade surfaces of exterior units that have been hot-dip galvanized after fabrication and are for bolted or screwed field connections.

C. Field Welding: Comply with the following requirements:

1. Use materials and methods that minimize distortion and develop strength and corrosion resistance of base metals.
2. Obtain fusion without undercut or overlap.
3. Remove welding flux immediately.
4. At exposed connections, finish exposed welds and surfaces smooth and blended so no roughness shows after finishing and contour of welded surface matches that of adjacent surface.

D. Fastening to In-Place Construction: Provide anchorage devices and fasteners where metal fabrications are required to be fastened to in-place construction. Provide threaded fasteners for use with concrete and masonry inserts, toggle bolts, through bolts, lag screws, wood screws, and other connectors.

E. Corrosion Protection: Coat concealed surfaces of aluminum that come into contact with grout, concrete, masonry, wood, or dissimilar metals with the following:

1. Cast Aluminum: Heavy coat of bituminous paint.
2. Extruded Aluminum: Two coats of clear lacquer.

3.2 INSTALLATION OF MISCELLANEOUS FRAMING AND SUPPORTS

A. General: Install framing and supports to comply with requirements of items being supported, including manufacturers' written instructions and requirements indicated on Shop Drawings.

3.3 REPAIRS

A. Galvanized Surfaces: Clean field welds, bolted connections, and abraded areas and repair galvanizing to comply with ASTM A780/A780M.

DRAFT

END OF SECTION 055000

DRAFT

DIVISION 07 – THERMAL AND MOISTURE PROTECTION
SECTION 07 42 13.15
FORMED PERFORATED METAL PLATE WALL PANELS

1.1 SUMMARY

A. Section Includes:
   1. Perforated and fabricated architectural metals
   2. Perforated aluminum or stainless-steel metal panels that incorporate project design images executed with cross-seam perforations.
   3. Continuous, horizontal cantilevered perforated metal panel blades projecting from the façade.
   4. Custom aluminum or stainless steel support plates connecting blades to façade panel support framing.
   5. Subframing, brackets, anchors, trims, closures, and all related accessories.

B. Related Requirements:

   1. Division 1: Submittal Procedures
   2. Division 1: Quality Control
   3. Division 1: Closeout Submittals
   4. Division 5: Metal Fabrications

1.2 DELEGATED DESIGN REQUIREMENTS

A. Performance Responsibility**:** Engage a qualified professional engineer, legally authorized to practice in the jurisdiction where the project is located, to provide comprehensive delegated design engineering services.

B. Scope of Design: The delegated design engineer must design the entire façade, including the formed perforated metal plate panel façade system, cantilevered perforated metal panel blades, panel thickness sizing, reinforcement stiffeners, attachment clips, fasteners, and sub-girt framing components.

C. Design Criteria: System must withstand all local building code structural wind loads, seismic forces, and thermal movements without permanent deformation, structural failure, or component displacement.

1.3 SUBMITTALS FOR DELEGATED DESIGN

A. Delegated Design Services Statement**:** Submit a formal statement signed and sealed by the delegated design engineer, certifying that the system design complies with specified structural, thermal, and performance criteria.

B. Structural Calculations: Provide comprehensive, engineered calculations demonstrating compliance with gravity and wind load pressures (positive and negative) according to ASCE 7. Stamped by a Professional Engineer licensed in good standing with the State of Ohio.

C. Submittal Coordination: Deliver all engineering packages with the delegated design engineer's seal in a timely manner to facilitate local jurisdiction submittal approval prior to fabrication.

D. Shop Drawings: Include detailed plans, elevations, sections, and structural attachment details, explicitly showing fastener types, sizes, spacing, and panel corner reinforcing. Stamped by a Professional Engineer licensed in good standing with the State of Ohio.

1.4 PREINSTALLATION MEETINGS

A. Preinstallation Conference: Conduct conference at **Project site**.

1. Meet with Owner, Architect, Owner's insurer if applicable, metal panel Installer, metal panel manufacturer's representative, structural-support Installer, and installers whose work interfaces with or affects metal panels, including installers of doors, windows, and louvers.
2. Review and finalize construction schedule and verify availability of materials, Installer's personnel, equipment, and facilities needed to make progress and avoid delays.
3. Review methods and procedures related to metal panel installation, including manufacturer's written instructions.
4. Examine support conditions for compliance with requirements, including alignment between and attachment to structural members.
5. Review flashings, special siding details, wall penetrations, openings, and condition of other construction that affect metal panels.
6. Review governing regulations and requirements for insurance, certificates, and tests and inspections if applicable.
7. Review temporary protection requirements for metal panel assembly during and after installation.
8. Review of procedures for repair of metal panels damaged after installation.
9. Document proceedings, including corrective measures and actions required, and furnish copy of record to each participant.

1.5 SUBMITTALS

A. General: Submit listed submittals in accordance with Conditions of the Contract and Division 1 Submittal Procedures.

B. Product Data: Submit product data, shop drawings, and installation instructions for custom perforated metal architectural panels. Include construction details; material descriptions; dimensions and profiles of panels, components, and accessories; and specified finishes. Provide manufacturer's product sheets identifying materials, available finishes, panel thicknesses, dimensions, minimum line spacing, and the available range of perforation and opening sizes.

C. Samples for Verification: For each type of exposed finish, prepared on Samples of size indicated below:
1. Finish Selection Sample: If requested, provide up to 5 of each material finishes for Architect's selection.
   a. Minimum Sample sizes: 8" x 10"

2. Perforated and Formed Sample: If requested, provide a representative perforated and formed sample, minimum 24 inches by 24 inches. The perforation scale may vary as needed to illustrate the intended design.

D. Shop Drawings: Include fabrication and installation layouts for metal panels, showing edge conditions, joints, panel profiles, corners, anchorages, attachment systems, trim, flashings, closures, accessories, and all required special details. Submit shop drawings indicating installation layouts, panel centerline dimensions, connection methods, and anchorage locations. Stamped by a Professional Engineer licensed in good standing with the State of Ohio.
   1. The Architect will provide electronic CAD files to be used as the basis for preparing shop drawings.

E. Patterning Files: Submit perforation patterning files developed from the image files provided by the Architect. Patterning files shall illustrate the intended perforation imagery across the panel surfaces and panel joints, using the specified perforation hole sizes.

F. Technical Datasheet: Submit structural calculation, system weight, and design pressure.

G. Quality Assurance:

   1. Certificates: Product certificates signed by manufacturer certifying materials comply with specified performance characteristics and criteria and physical requirements.

   2. Manufacturer's Instructions: Manufacturer's installation instructions

1.6 Closeout Submittals: Submit the following:

   1. Warranty: Warranty documents specified herein.

   2. Operation and Maintenance Data: Operation and maintenance data for installed products in accordance with Division 1 Closeout Submittals (Maintenance Data and Operation Data) Section. Include methods for maintaining installed products and precautions against cleaning materials and methods detrimental to finishes and performance.

   3. Sample Warranties: For special warranties.

1.7 QUALITY ASSURANCE

A. Qualifications:

   1. Fabricator Qualifications: Company shall be a manufacturer specializing in the products specified in this Section, with a minimum of 15 years of documented experience and adequate production capacity to meet the Project Schedule. Fabrication shall be performed in a quality-controlled facility by experienced personnel, with references demonstrating multiple successful projects involving perforated metal fabrication comparable to the requirements of this Project.

2. Installer Qualifications: Company specializing in installing the work of this section with at least 5 years of documented experience with a comparable-size project. Familiar with the Products and the manufacturer's installation methods.

B. Reliance on Existing Documentation: The specialty contractor shall perform all design, engineering, coordination, fabrication, and shop drawing preparation based solely on the existing construction documents provided for reference only. The specialty contractor is responsible for thoroughly reviewing all existing documents and incorporating those dimensions into the delegated design, and shall notify the Architect of any discrepancies or unclear conditions prior to proceeding. Any conditions not clearly defined in the available documents shall be treated as assumed conditions and explicitly identified as such within shop drawings and engineering submittals. The specialty contractor shall incorporate reasonable tolerances, adjustment strategies, and attachment flexibility to accommodate typical construction variances of existing structures.

C. Electronic Files:

1. Licensing: Licensing of image file shall be provided by the Architect to the manufacturer prior to acceptance of the bid, unless otherwise agreed upon in writing.

2. Imaging Files: Image files in .jpg, .png, .ai files format, with minimum resolution of 72 pixel/inch, will be provided by the Architect to the manufacturer.

D. Source Limitation:

1. When possible, ensure all raw material came from the same producing mill, the same master slab, and the same chemical composition.

2. All panels in this section shall be produced by the same manufacturer and finished by the same finish applicator to protect against variations.

1.8 MOCKUPS

A. Build mockups to verify selections made under Sample submittals and to demonstrate aesthetic effects and set quality standards for fabrication and installation.

1. Free-standing mock-up only. In-place mock-up not permitted.

2. Build mockup of typical metal panel assembly **as shown on Drawings,** including supports, attachments, and accessories.

3. Approval of mockups does not constitute approval of deviations from the Contract Documents contained in mockups unless Architect specifically approves such deviations in writing.

B. Mock-up pre-installation meetings:

1. Preinstallation Conference: Conduct a conference at the Project site.

a. Meet with Owner, Tenant, Construction Manager, Architect and installers of major systems whose Work is included in the freestanding mock-up.
b. Determine location of mock-up on or adjacent to Project site.
c. Review and finalize schedule for mock-up, and verify availability of materials, personnel and equipment needed to complete mockups and maintain schedule for the Work.

1.9 DELIVERY, STORAGE, AND HANDLING

A. Deliver components, metal panels, and other manufactured items so as not to be damaged or deformed. Package metal panels for protection during transportation and handling.

B. All crates and packaging should be inspected upon delivery for damage. Contact the manufacturer immediately at the time of receipt if any damage is identified. Photographs of any damaged product, including concealed damages, must be supplied to the manufacturer with any claims. Photos of damaged crates and packaging must also be provided to manufacturer. Freight damage must be filed with freight company within the freight carrier's terms.

C. Unload, store, and erect metal panels in a manner to prevent bending, warping, twisting, and surface damage.

D. Do not stack crates unless otherwise approved and noted by manufacturer.

E. Stack metal panels horizontally on platforms or pallets, covered with suitable weathertight and ventilated covering. Store metal panels to ensure dryness, with a positive slope for drainage of water. Do not store metal panels in contact with other materials that might cause staining, denting, or other surface damage. Crated products that are stored under tarps should be frequently opened and ventilated to reduce humidity and condensation accumulation.

F. Retain strippable protective covering on metal panels during installation.

G. Remove the protective film immediately after installation

H. Keep product free of oil, grease, mortar, paint, acid, bitumen, drilling dust, dirty water, and other impurities.

I. Do not use adhesive tape on products in areas visible after installation.

J. Do not scribe or mark on products.

K. The Contractor is responsible for using all means necessary to protect the materials of this Section before, during, and after installation and to protect the installed work and materials of all other trades.

L. In the event of damage, immediately make all repairs and replacements necessary at the sole cost of the responsible party.

1.10 FIELD CONDITIONS

A. Weather Limitations: Proceed with installation only when existing and forecasted weather conditions permit assembly of metal panels to be performed according to manufacturers' written instructions and warranty requirements.

1.11 COORDINATION

A. Coordinate metal panel installation with rain drainage work, flashing, trim, construction of soffits, and other adjoining work to provide a noncorrosive installation.

1.12 WARRANTY

A. Manufacturer’s Warranty: Manufacturer will warrant its products to be in good quality, free from defects, in conformance with the specification, and when installed in accordance with manufacturer’s published installation procedures. Any defaults or defects in material or workmanship resulting solely from the manufacturer shall constitute a warranty claim. Manufacturer’s warranty coverage and failure types includes, but not limited to, the following:

1. 2-years limited warranty for all structural failures including, but not limited to, permanent deflection beyond design limit.

2. 1-Year Warranty on deterioration of metals, defined as perforation due to corrosion resulting from manufacturer’s defects, and loss of adhesion as a result from manufacturer’s finish application. This warranty does not cover natural weathering and fading of the surface that will occur as the surface is exposed to ambient conditions. Nor does it cover minor oxidation or oxidation products that transfer to other surfaces.

3. Warranty commences upon shipment of material by manufacturer.

4. During the warranty period, and upon approval of the claim, the manufacturer will repair, or at its option, replace the products that are proven to be defective. The labor and all associated costs (i.e., Scaffolding, lifts, etc.) to remove and reinstall repaired or replacement product is included.

B. Special Warranty: Manufacturer's standard form in which manufacturer agrees to repair or replace components of metal panel systems that fail in materials or workmanship within specified warranty period.

1. Failures include, but are not limited to, the following:

a. Structural failures including rupturing, cracking, or puncturing.
b. Deterioration of metals and other materials beyond normal weathering.

2. Warranty Period: **Two** years from date of Substantial Completion.

PART 2 - PRODUCTS

2.1 PERFORATED METAL PANEL FACADE

A. ACCEPTABLE MANUFACTURERS: Acceptable manufacturers include, but are not limited to the following:

1. **BASIS OF DESIGN: A. Zahner Company**, 1400 E. 9th Street, Kansas City, MO 64106; Phone: (816) 423-8354.

2. **Hendrick Architectural**, 1 Seventh Ave., Carbondale, PA 18407; Phone: (877) 840-0881, (570) 282-1010.

3. **Arktura,** 966 Sandhill Ave. Carson CA 90746; Phone: (310) 532-1050

2.2 PERFORMANCE REQUIREMENTS

A. Structural Performance: Provide metal panel systems capable of withstanding the effects of the following loads, based on testing according to ASTM E1592:

1. Wind Loads: As indicated on Drawings.

2. Gravity Loads: As indicated on Drawings.
3. Other Design Loads: As indicated on Drawings.
4. Deflection Limits: For wind loads, no greater than 1/240 of the span.

B. Thermal Movements: Allow for thermal movements from ambient and surface temperature changes by preventing buckling, opening of joints, overstressing of components, failure of joint sealants, failure of connections, and other detrimental effects. Base calculations on surface temperatures of materials due to both solar heat gain and nighttime-sky heat loss.

1. Temperature Change (Range): 120 deg F, ambient; 180 deg F, material surfaces.

C. Tolerances:
1. Panels and Components: Panels shall be fabricated to a tolerance not to exceed 1/8” deviation in any dimension from dimensions shown on the shop drawings.
2. Bent Radius at panel bend should be no more than 4 times the thickness of the metal panel.
3. Panel Flatness: Panels shall be fabricated to a flatness that is not to exceed 0.5” out-of-plane when panels are in their installed condition.
4. Installation Tolerances: Adjust hardware to ensure that panels after installation maintain the tolerance of 1/8” in 10’ that is not cumulative for level, plumb and line. Offset between panel edges shall be less than 1/16” in plane with the surface.
5. Panel Joints: Hardware and panels shall be installed so that panel joints are 1/8” +/-16”.

D. **Perforations:** Perforation patterns shall maintain an open area not greater than 40 percent, based on the combination of hole size, spacing, and pattern density. Delegated design engineer shall determine final perforation dimensions and ligament widths necessary to meet structural

performance requirements while staying within the specified maximum open area and maintaining the intended architectural appearance.

2.3 Materials:

A. Perforated Metal Panel

1. Aluminum panel:
   a. Thickness: **Minimum 0.125-inch**. Delegated design engineer shall determine panel thicknesses required to meet structural performance criteria, including wind loads, deflection limits and allowable stress requirements.
   b. Alloy: 5052-H32 aluminum alloy
   c. Finish: Clean, untreated mill finish as fabricated by the manufacturer, free from scratches, oil, markings, and surface blemishes..
   d. Panel Width: maximum 40”
   e. Panel Length: maximum 120”
   f. Panel Depth: Provide panels with a minimum architectural depth of 2.5 inch to maintain the design appearance. Final required panel depth shall be determined by the delegated design engineer based on structural performance criteria
   g. Shape: Formed panel edges per design details and requirements
   h. Perforations: As indicated on Drawings.

2. Stainless Steel panel:
   a. Thickness: Minimum 11 ga (0.125-in). Delegated design engineer shall determine panel thicknesses required to meet structural performance criteria, including wind loads, deflection limits and allowable stress requirements.
   b. Alloy: Type 304.
   c. Finish: Brushed mill finish.
   d. Panel Width: minimum 36”
   e. Panel Length: minimum 72”
   f. Panel Depth: Provide panels with a minimum architectural depth of 2.5 inch to maintain the design appearance. Final required panel depth shall be determined by the delegated design engineer based on structural performance criteria.
   g. Perforations: As indicated on Drawings.

B. Continuous cantilevered perforated metal panel blades:

1. Projection: As indicated on Drawings.
2. Section Geometry: As indicated on Drawings.
3. Material: Aluminum or Stainless-steel
   a. Thickness: Minimum 0.125-inch. Delegated design engineer shall determine panel thicknesses required to meet structural performance criteria, including wind loads, deflection limits and allowable stress requirements.
   b. Alloy: 5052-H32 aluminum alloy
   c. Finish: Clean, untreated mill finish as fabricated by the manufacturer, free from scratches, oil, markings, and surface blemishes..
   d. Panel Width: minimum 72”
   e. Panel Length: minimum 72”
   f. Panel Depth: Flat

g. Shape: Formed panel edges per design details and requirements
h. Perforations: As indicated on Drawings.

C. Cantilevered perforated metal panel blade support plates

1. Material: Aluminum or stainless-steel
2. Thickness: Minimum 0.125-inch. Delegated design engineer shall determine panel thicknesses required to meet structural performance criteria, including wind loads, deflection limits and allowable stress requirements.
3. Alloy: 5052-H32 aluminum alloy
4. Finish: Clean, untreated mill finish as fabricated by the manufacturer, free from scratches, oil, markings, and surface blemishes..
5. Shape: As indicated on Drawings.

2.4 MISCELLANEOUS MATERIALS

A. Miscellaneous Steel Subframing and Support Members: Fabricate miscellaneous steel subframing, brackets, and support members from structural steel shapes, plates, and bars complying with ASTM A36/A36M or ASTM A572/A572M unless otherwise indicated. Provide hot-dip galvanizing in accordance with ASTM A123/A123M for fabricated assemblies and ASTM A153/A153M for steel fasteners and hardware. Miscellaneous steel components shall be designed and sized by the delegated engineer and shall include, but not be limited to, angles, plates, channels, stiffeners, and connection hardware required to support and align the architectural metal panel and sunshade fin system. Provide manufacturer’s standard or custom-fabricated steel support members as necessary to achieve required attachment geometry, tolerances, and load transfer to the primary structure.

B. Panel Fasteners: Self-tapping screws designed to withstand design loads. Provide countersunk fasteners with heads matching the finish of metal panels.
1. Compatible with aluminum or stainless-steel substrates.
2. Provide isolation pads between dissimilar materials.

2.5 FABRICATION

A. Fabricate and finish metal panels and accessories at the factory, by manufacturer's standard procedures and processes, as necessary to fulfill indicated performance requirements demonstrated by laboratory testing. Comply with indicated profiles and with dimensional and structural requirements.

B. Provide panel profile, including major ribs and intermediate stiffening ribs, if any, for full length of panel.

2.6 FINISHES

A. Protect mechanical and painted finishes on exposed surfaces from damage by applying a strippable, temporary protective covering before shipping.

B. Appearance of Finished Work: Variations in appearance of abutting or adjacent pieces are acceptable if they are within one-half of the range of approved Samples. Noticeable variations in same piece are not acceptable. Variations in appearance of other components are acceptable if they are within the range of approved Samples and are assembled or installed to minimize contrast.

PART 3 - EXECUTION

3.1 EXAMINATION

A. Examine substrates, areas, and conditions, with Installer present, for compliance with requirements for installation tolerances, metal panel supports, and other conditions affecting performance of the Work.

1. Examine wall framing to verify that girts, angles, channels, studs, and other structural panel support members and anchorage have been installed within alignment tolerances required by metal wall panel manufacturer.

B. Examine roughing-in for components and systems penetrating metal panels to verify actual locations of penetrations relative to seam locations of metal panels before installation.

C. Proceed with installation only after unsatisfactory conditions have been corrected.

3.2 PREPARATION

A. Miscellaneous Supports: Install subframing and other miscellaneous panel support members and anchorages according to ASTM A36 and metal panel manufacturer's written recommendations.

3.3 INSTALLATION OF METAL PANELS

A. Install metal panels according to manufacturer's written instructions in orientation, sizes, and locations indicated. Install panels perpendicular to supports unless otherwise indicated. Anchor metal panels and other components of the Work securely in place, with provisions for thermal and structural movement.

1. Shim or otherwise plumb substrates receiving metal panels.
2. Install screw fasteners in predrilled holes.
3. Locate and space fastenings in uniform vertical and horizontal alignment.

B. Fasteners:
1. Aluminum Panels: Use countersunk aluminum or stainless steel fasteners. Mill finish to match panels.
2. Stainless Steel Panels: Use countersunk stainless steel fasteners.

C. Metal Protection: Where dissimilar metals contact each other or corrosive substrates, protect against galvanic action as recommended in writing by metal panel manufacturer.

3.4 CLEANING AND PROTECTION

A. Remove temporary protective coverings and strippable films, if any, as metal panels are installed, unless otherwise indicated in manufacturer's written installation instructions. On completion of metal panel installation, clean finished surfaces as recommended by metal panel manufacturer. Maintain in a clean condition during construction.

B. After metal panel installation, clear weep holes and drainage channels of obstructions, dirt, and sealant.

C. Replace metal panels that have been damaged or have deteriorated beyond successful repair by finish touchup or similar minor repair procedures.

END OF SECTION 07 42 13.15

Hamilton County
Board of County Commissioners

PAYCOR STADIUM

SOUTH SCOREBOARD FACADE

1 Paycor Stadium Cincinnati, OH 45202

ISSUED FOR BID

KZF DESIGN

Architecture | Engineering | Interiors | Planning

DRAWING INDEX

NUMBER	TITLE	CURRENT ISSUE
GENERAL		
G-000	COVER SHEET	1.0
ARCHITECTURE		
A-001	SYMBOLS & ABBREVIATIONS	1.0
A-101	SOUTH SCOREBOARD FACADE PLAN	1.0
A-102	SOUTH SCOREBOARD FACADE PLAN	1.0
A-103	SOUTH SCOREBOARD FACADE PLAN	1.0
A-104	SOUTH SCOREBOARD FACADE PLAN	1.0
A-105	SOUTH SCOREBOARD FACADE PLAN	1.0
A-106	SOUTH SCOREBOARD FACADE PLAN	1.0
A-121	SCOREBOARD FACADE PLAN DETAILS	1.0
A-201.1	SOUTH SCOREBOARD FACADE ELEVATIONS	1.0
A-201.2	SOUTH SCOREBOARD FACADE ELEVATIONS	1.0
A-201.3	SOUTH SCOREBOARD FACADE ELEVATIONS	1.0
A-201.4	SOUTH SCOREBOARD FACADE ELEVATIONS	1.0
A-202	SOUTH SCOREBOARD FACADE RENDERINGS	1.0
A-300	SOUTH SCOREBOARD FACADE ASSEMBLY DIAGRAM	1.0
A-301	SOUTH SCOREBOARD SECTION	1.0
A-302	SOUTH SCOREBOARD FACADE DETAILS	1.0
A-310	BLADE ASSEMBLY DETAILS	1.0
A-311	TAPERED BLADE PLATE PROFILES	1.0
A-312	FACADE PANEL AND BLADE DETAILS	1.0
A-901	PERFORATED PANEL MOCKUP	1.0

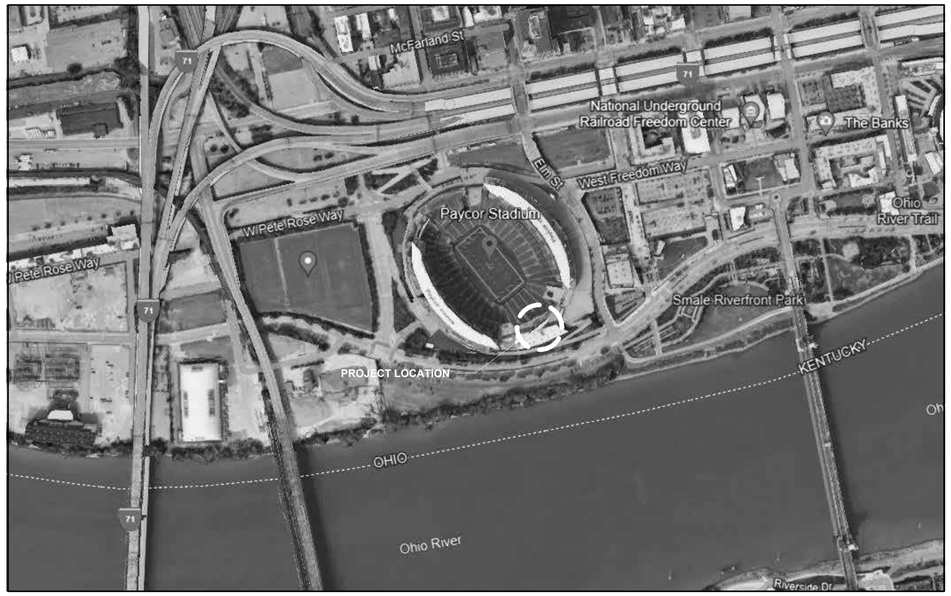

OWNER

HAMILTON COUNTY
THREE PAYCOR STADIUM
CINCINNATI, OHIO 45202
P. 513.946.4000

TENANT

CINCINNATI BENGALS
ONE PAYCOR STADIUM
CINCINNATI, OHIO 45202
P. 513.455.4800

ARCHITECTURE

KZF DESIGN
700 BROADWAY ST.
CINCINNATI, OHIO 45202
P. 513.621.6211

STRUCTURAL

THP LIMITED
221 EAST FOURTH ST.
SUITE 1150
CINCINNATI, OH 45202
P. 513.241.3222

THIS BUILDING IS PROTECTED BY FLOOD PROTECTION SYSTEMS INCLUDING FLOOD WALLS AND A GENERATOR-SUPPLIED DEEP WELL PUMPING SYSTEM IN COMPLIANCE WITH ORC 1333.15(E)(2). THE WATER LEVEL IS MAINTAINED TO 470' WITHIN THE FACILITY. THE FLOODPLAIN ELEVATION IS 498'. THE LOWEST FLOOR ELEVATION IN THIS PROJECT SPACE IS 480' THEREFORE, THERE ARE NO SPECIAL INSTALL REQUIREMENTS.

NO.	DATE	DESCRIPTION
1.0	10-13-2026	ISSUE FOR BID

Hamilton County OHIO

SOUTH SCOREBOARD FACADE
1 Paycor Stadium Cincinnati, OH 45202

KZF DESIGN
Designing Better Futures

KZF DESIGN INC.
700 Broadway Street
Cincinnati, OH 45202

main 513.621.6211
kzf.com

DESIGNED	COMM. NO.
B. RAYMOND	8445.10
DRAWN	DATE
M. ALBERS	10-13-2026
CHECKED	PROJ. MGR.
J. THAMANN	C. MAI

COVER SHEET

DRAWING NUMBER ISSUE

G-000 1.0

DRAWING ABBREVIATIONS

A/E	ARCHITECT/ENGINEER
A/V	AUDIO / VISUAL
ABV	ABOVE
ACT	ACOUSTICAL CEILING TILE
ADA	AMERICANS WITH DISABILITIES ACT
ADJ	ADJUSTABLE
ADJT	ADJACENT
AFF	ABOVE FINISHED FLOOR
AFG	ABOVE FINISHED GRADE
AHU	AIR HANDLING UNIT
ALT	ALTERNATE
ALUM	ALUMINUM
ANOD	ANODIZE
APPROX	APPROXIMATE
ARCH	ARCHITECT
ASSOC	ASSOCIATION
AUX	AUXILIARY
AVG	AVERAGE

B/	BOTTOM OF
BD	BOARD
BHMA	BUILDER'S HARDWARE MANUFACTURER'S ASSOC
BLDG	BUILDING
BLKG	BLOCKING
BOS	BOTTOM OF STEEL
BOT	BOTTOM
BP	BASE PLATE
BRG	BEARING
BRK	BRICK
BRKT	BRACKET
BSMT	BASEMENT
BTWN	BETWEEN
BUR	BUILT-UP ROOFING

CCTV	CLOSED CIRCUIT TV
CD	CONSTRUCTION DOCUMENTS
CDR	CARD READER
CEM	CEMENT
CER	CERAMIC
CF/CI	CONTRACTOR FURNISHED/CONTRACTOR INSTALLED
CG	CORNER GUARD
CIP	CAST-IN-PLACE
CJ	CONTROL JOINT
CL	CENTER LINE
CLG	CEILING
CLG HT	CEILING HEIGHT
COL	COLUMN
CONC	CONCRETE
CONF	CONFERENCE
CONST	CONSTRUCTION
CONT	CONTINUOUS
CONTR	CONTRACTOR
COORD	COORDINATE
CORR	CORRIDOR, CORRUGATED
CPT	CARPET
CT	CERAMIC TILE

D	DEPTH
DBL	DOUBLE
DEMO	DEMOLITION
DEPT	DEPARTMENT
DET	DETAIL
DF	DRINKING FOUNTAIN
DIA	DIAMETER
DIAG****	DIAGONAL
DIAG****	DIAGRAM
DIM	DIMENSION
DN	DOWN
DR	DOOR
DS	DOWNSPOUT
DWG	DRAWING

EA	EACH
EB	EXPANSION BOLT
EIFS	EXTERIOR INSULATION AND FINISH SYSTEM
EJ	EXPANSION JOINT
EL	ELEVATION
ELEC	ELECTRIC
ELEV	ELEVATOR
EMER	EMERGENCY
EPS	EXPANDED POLYSTYRENE BOARD (INSULATION)
EQ	EQUAL
EWC	ELECTRIC WATER COOLER
EXP	EXPOSED
EXT****	EXTERIOR

F/	FACE OF
F/F	FACE TO FACE, FLOOR TO FLOOR
FD	FLOOR DRAIN
FE	FIRE EXTINGUISHER
FF	FINISH FLOOR
FF&E	FIXTURE, FURNISHING & EQUIPMENT
FIN	FINISH
FLR	FLOOR
FR	FRAME
FUR	FURRING
FUT	FUTURE

GA	GAUGE
GALV	GALVANIZED
GC	GENERAL CONTRACTOR
GFCI	GOVERNMENT FURNISHED CONTRACTOR INSTALLED
GFGI	GOVERNMENT FURNISHED GOVERNMENT INSTALLED
GL	GLASS
GUT	GUTTER
GYP BD	GYPSUM BOARD

H	HIGH
HB	HOSE BIBB
HC	HANDICAPPED
HD	HEAVY DUTY
HDR	HEADER
HDW	HARDWARE
HM	HOLLOW METAL
HORIZ	HORIZONTAL
HP	HIGH POINT
HT	HEIGHT
HVAC	HEATING, VENTILATING, & AIR CONDITIONING
HWD	HARDWOOD

IBC	INTERNATIONAL BUILDING CODE
IN	INCH
INFO	INFORMATION
INSUL	INSULATION
INT	INTERIOR
INV	INVERT

JAN	JANITOR
JT	JOINT

KD	KNOCK DOWN
KIT	KITCHEN
KO	KNOCKOUT
KPL	KICKPLATE

LAM	LAMINATE
LAV	LAVATORY
LB	POUND
LBR	LUMBER
LF	LINEAR FEET (FOOT)
LH	LEFT HAND
LIN	LINEAR
LKR	LOCKER
LP	LOW POINT
LVR	LOUVER

MO	MASONRY OPENING

NFPA	NATIONAL FIRE PROTECTION ASSOCIATION
NIC	NOT IN CONTRACT
NO	NUMBER
NOM	NOMINAL
NRC	NOISE REDUCTION COEFFICIENT
NTS	NOT TO SCALE

OC	ON CENTER

PCT	PERCENT
PERF	PERFORATED
PLAS	PLASTER
PLBG	PLUMBING
PLYWD	PLYWOOD
PNL	PANEL
PR	PAIR
PRKG	PARKING
PSF	POUNDS PER SQUARE FOOT
PT	PAINT
PT	PRESSURE TREATED
PTN	PARTITION
PWR	POWER

QT	QUARRY TILE
QTY	QUANTITY

R	RISER
RDG INS	RIGID INSULATION, SOLID

SGL	SINGLE
SHT	SHEET
SIM	SIMILAR
SM	SHEET METAL
SQ IN	SQUARE INCH
STC	SOUND TRANMISSION CLASS
STD	STANDARD
STL	STEEL
STOR	STORAGE
STR	STRUCTURAL
SYM	SYMMETRICAL

T	TREAD
T&B	TOP AND BOTTOM
T/	TOP OF
T/S	TOP OF STEEL
TEMP	TEMPORARY
THK	THICK
TYP	TYPICAL

UL	UNDERWRITERS LABORATORY

VCT	VINYL COMPOSITION TILE
VIF	VERIFY IN FIELD

W	WIDTH
W/	WITH
W/O	WITHOUT
WD	WOOD
WH	WALL HYDRANT
WP	WATERPROOFING
WSCT	WAINSCOT
WT	WEIGHT

DRAWING REFERENCE

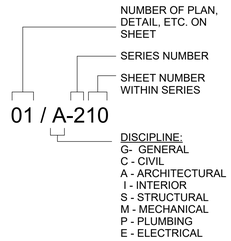

REFERENCE SYMBOLS

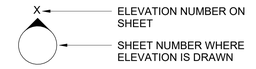

INTERIOR ELEVATION

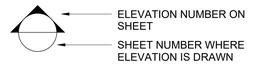

EXTERIOR ELEVATION

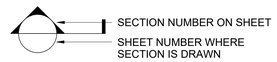

SECTION

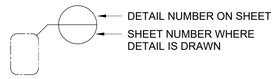

DETAIL

DRAWING SYMBOLS

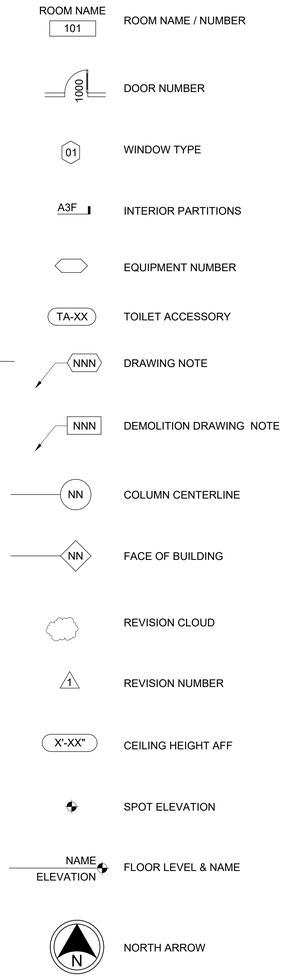

NOTE: THIS SHEET CONTAINS STANDARD ABBREVIATIONS & SYMBOLS AND APPLIES TO THIS SET OF DRAWINGS TO THE EXTENT APPLICABLE

NO.	DATE	DESCRIPTION
1.0	10-13-2026	ISSUE FOR BID

Hamilton County OHIO

SOUTH SCOREBOARD FACADE

1 Paycor Stadium Cincinnati, OH 45202

KZF DESIGN
Designing Better Futures

KZF DESIGN INC.
700 Broadway Street
Cincinnati, OH 45202

main 513.621.6211
kzf.com

DESIGNED	COMM. NO.
B. RAYMOND	8445.10
DRAWN	DATE
M. ALBERS	10-13-2026
CHECKED	PROJ. MGR.
J. THAMANN	C. MAI

SYMBOLS & ABBREVIATIONS

DRAWING NUMBER	ISSUE
A-001	1.0

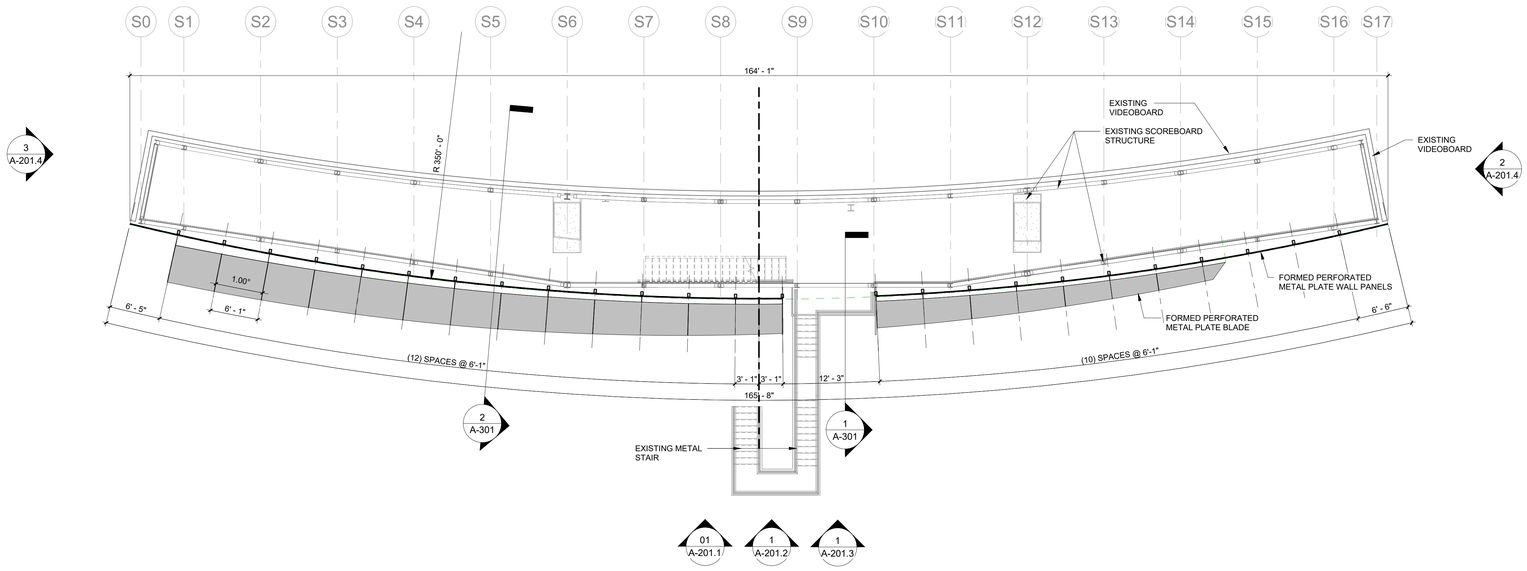

01 / A-101 **FACADE PLAN 01**
1/8" = 1'-0"

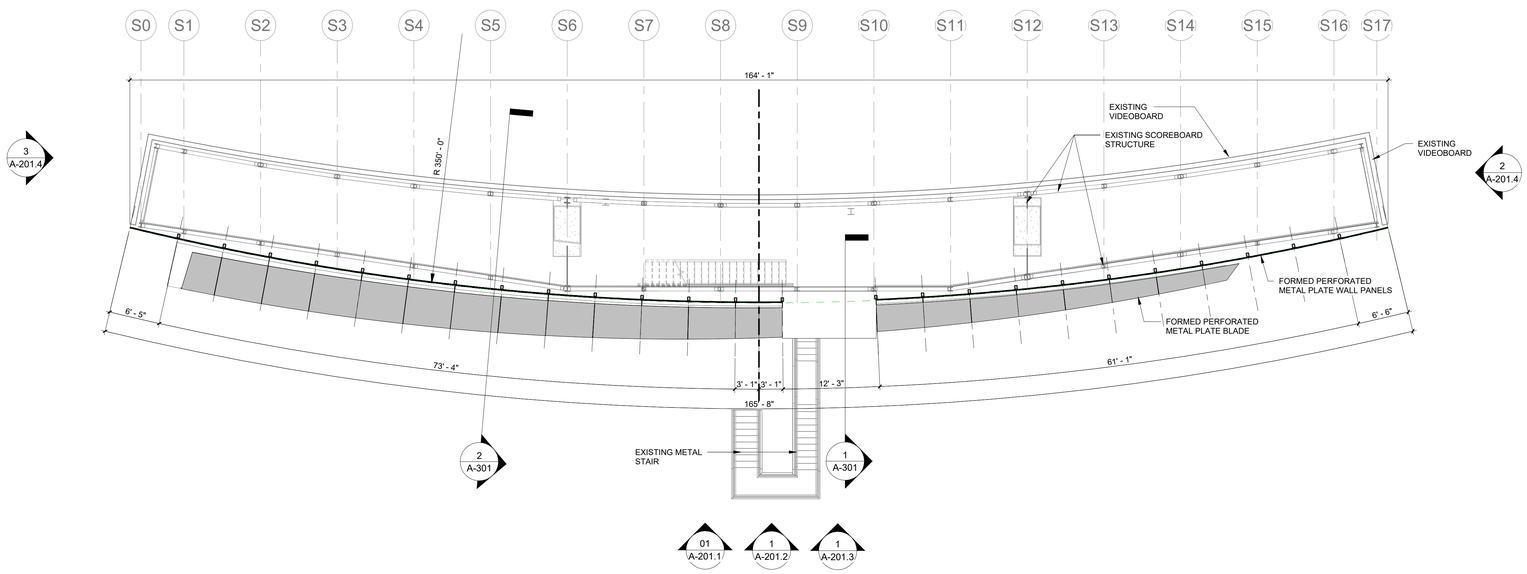

02 / A-101 **FACADE PLAN 02**
1/8" = 1'-0"

GENERAL NOTES

1. REVIEW OF THE DELEGATED DESIGN SUBMITTALS BY THE ARCHITECT AND ENGINEER OF RECORD IS SOLELY FOR RECOGNITION OF GENERAL CONFORMANCE WITH THE DESIGN INTENT. DELEGATED DESIGNER RETAINS SOLE LIABILITY AND RESPONSIBILITY FOR SYSTEM PERFORMANCE, FIELD DIMENSIONS, FABRICATION TECHNIQUES, AND SAFE INSTALLATION.
2. THE DESIGN OF PERFORATED PANEL SYSTEM IS A DELEGATED DESIGN. THE DELEGATED DESIGN CONTRACTOR IS RESPONSIBLE FOR THE FINAL DETAILED ENGINEERING AND DESIGN. ALL SHOP DRAWINGS AND STRUCTURAL CALCULATIONS MUST BE PREPARED AND SEALED BY A PROFESSIONAL ENGINEER LICENSED IN THE STATE OF OHIO. DELEGATED DESIGN SHALL COMPLY WITH ALL PERFORMANCE CRITERIA AND SPECIFICATIONS.
3. THE DELEGATED DESIGN ENGINEER OF RECORD SHALL COORDINATE WITH THE ARCHITECT OF RECORD TO ENSURE AESTHETIC AND CLEARANCE REQUIREMENTS ARE MET. THE REVIEW OF SUBMITTALS BY THE ARCHITECT/ENGINEER OF RECORD IS FOR GENERAL CONFORMANCE WITH DESIGN INTENT ONLY AND DOES NOT RELIEVE THE DELEGATED DESIGNER OF FULL DESIGN RESPONSIBILITY.
4. DO NOT SCALE DRAWINGS FOR EXACT DIMENSIONS. THE DELEGATED DESIGNER IS RESPONSIBLE FOR FIELD VERIFYING ALL DIMENSIONS AND CONDITIONS PRIOR TO FINALIZING THE SHOP DRAWINGS AND FABRICATION.
5. THE DELEGATED DESIGN SYSTEM(S) INDICATED IN THE CONTRACT DOCUMENTS SHALL BE DESIGNED TO RESIST ALL DEAD, LIVE, WIND, SEISMIC, AND THERMAL LOADS IN STRICT ACCORDANCE WITH THE PREVAILING OHIO BUILDING CODE, AND ALL LOCAL AMENDMENTS. THE SPECIFIED SYSTEM PERFORMANCE CRITERIA SHALL TAKE PRECEDENCE OVER GENERAL DETAILS IN THE EVENT OF A CONFLICT.
6. THE DELEGATED DESIGNER SHALL SUBMIT COMPLETE SHOP DRAWINGS, PRODUCT DATA, AND STRUCTURAL CALCULATIONS FOR ALL DELEGATED DESIGN ITEMS. ALL SUBMITTALS MUST BEAR THE SIGNATURE AND DEPOSITED SEAL OF A REGISTERED PROFESSIONAL ENGINEER LICENSED IN THE STATE OF OHIO. INDEPENDENT STRUCTURAL CALCULATIONS MUST BE REPRODUCIBLE AND CLEARLY STATE ALL DESIGN ASSUMPTIONS, LOAD COMBINATIONS, AND MATERIAL STRENGTHS.
7. THE DELEGATED DESIGN ENGINEER SHALL EXPEDITIOUSLY COORDINATE ATTACHMENT POINTS, EMBEDS, AND CLEARANCES WITH ALL ADJACENT TRADES.

NO.	DATE	DESCRIPTION
1.0	10-13-2026	ISSUE FOR BID

Hamilton County OHIO

SOUTH SCOREBOARD FACADE
1 Paycor Stadium Cincinnati, OH 45202

KZF DESIGN
Designing Better Futures

KZF DESIGN INC.
700 Broadway Street
Cincinnati, OH 45202

main 513.621.6211
kzf.com

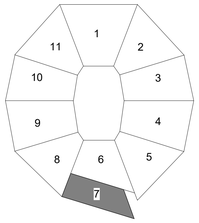

N

0 4' 8' 16'
SCALE: 1/8"=1'-0"

DESIGNED	COMM. NO.
B. RAYMOND	8445.10
DRAWN	DATE
M. ALBERS	10-13-2026
CHECKED	PROJ. MGR.
J. THAMANN	C. MAI

SOUTH SCOREBOARD FACADE PLAN

DRAWING NUMBER ISSUE
A-101 1.0

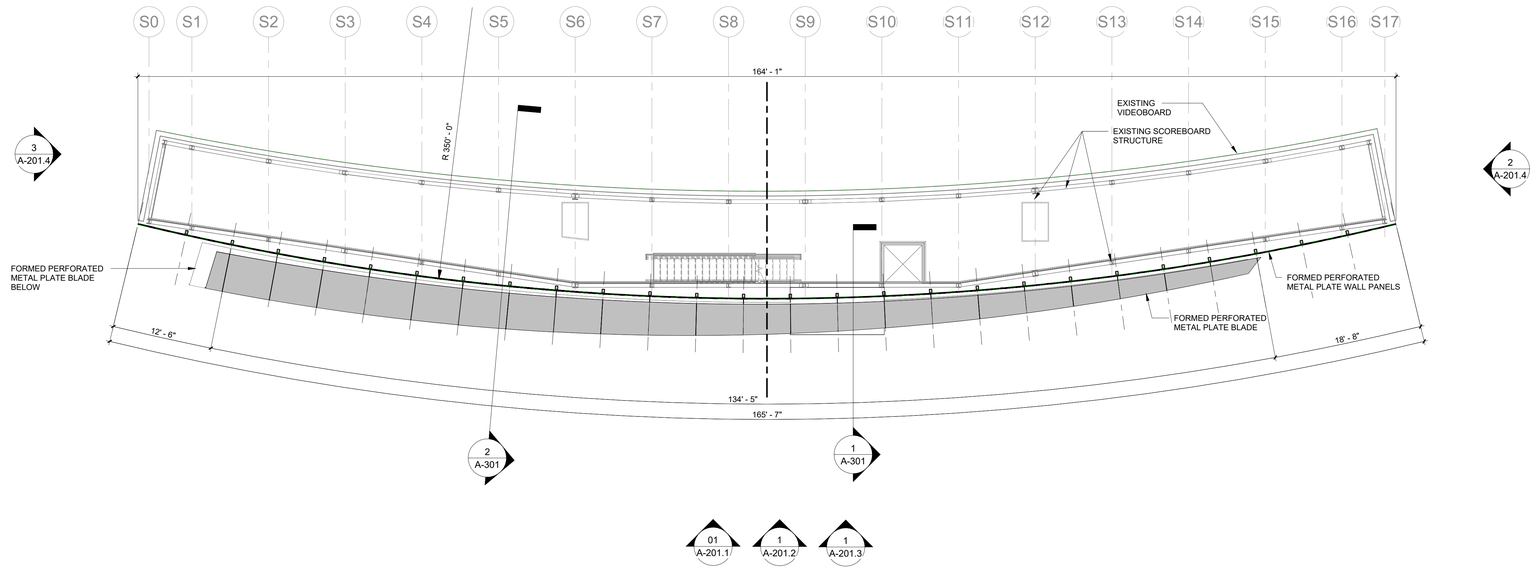

3 A-102 **FACADE PLAN 03**
1/8" = 1'-0"

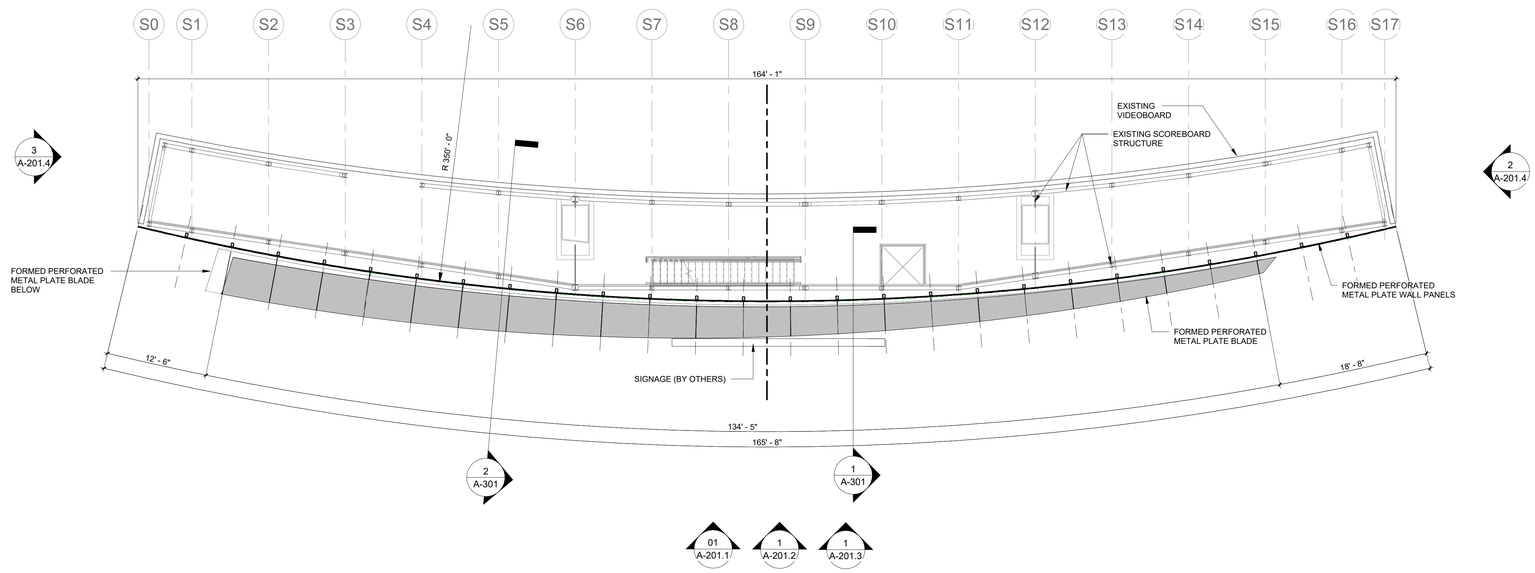

4 A-102 **FACADE PLAN 04**
1/8" = 1'-0"

GENERAL NOTES

1. REVIEW OF THE DELEGATED DESIGN SUBMITTALS BY THE ARCHITECT AND ENGINEER OF RECORD IS SOLELY FOR RECOGNITION OF GENERAL CONFORMANCE WITH THE DESIGN INTENT. DELEGATED DESIGNER RETAINS SOLE LIABILITY AND RESPONSIBILITY FOR SYSTEM PERFORMANCE, FIELD DIMENSIONS, FABRICATION TECHNIQUES, AND SAFE INSTALLATION.
2. THE DESIGN OF PERFORATED PANEL SYSTEM IS A DELEGATED DESIGN. THE DELEGATED DESIGN CONTRACTOR IS RESPONSIBLE FOR THE FINAL DETAILED ENGINEERING AND DESIGN. ALL SHOP DRAWINGS AND STRUCTURAL CALCULATIONS MUST BE PREPARED AND SEALED BY A PROFESSIONAL ENGINEER LICENSED IN THE STATE OF OHIO. DELEGATED DESIGN SHALL COMPLY WITH ALL PERFORMANCE CRITERIA AND SPECIFICATIONS.
3. THE DELEGATED DESIGN ENGINEER OF RECORD SHALL COORDINATE WITH THE ARCHITECT OF RECORD TO ENSURE AESTHETIC AND CLEARANCE REQUIREMENTS ARE MET. THE REVIEW OF SUBMITTALS BY THE ARCHITECT/ENGINEER OF RECORD IS FOR GENERAL CONFORMANCE WITH DESIGN INTENT ONLY AND DOES NOT RELIEVE THE DELEGATED DESIGNER OF FULL DESIGN RESPONSIBILITY.
4. DO NOT SCALE DRAWINGS FOR EXACT DIMENSIONS. THE DELEGATED DESIGNER IS RESPONSIBLE FOR FIELD VERIFYING ALL DIMENSIONS AND CONDITIONS PRIOR TO FINALIZING THE SHOP DRAWINGS AND FABRICATION.
5. THE DELEGATED DESIGN SYSTEM(S) INDICATED IN THE CONTRACT DOCUMENTS SHALL BE DESIGNED TO RESIST ALL DEAD, LIVE, WIND, SEISMIC, AND THERMAL LOADS IN STRICT ACCORDANCE WITH THE PREVAILING OHIO BUILDING CODE, AND ALL LOCAL AMENDMENTS. THE SPECIFIED SYSTEM PERFORMANCE CRITERIA SHALL TAKE PRECEDENCE OVER GENERAL DETAILS IN THE EVENT OF A CONFLICT.
6. THE DELEGATED DESIGNER SHALL SUBMIT COMPLETE SHOP DRAWINGS, PRODUCT DATA, AND STRUCTURAL CALCULATIONS FOR ALL DELEGATED DESIGN ITEMS. ALL SUBMITTALS MUST BEAR THE SIGNATURE AND DEPOSITED SEAL OF A REGISTERED PROFESSIONAL ENGINEER LICENSED IN THE STATE OF OHIO. INDEPENDENT STRUCTURAL CALCULATIONS MUST BE REPRODUCIBLE AND CLEARLY STATE ALL DESIGN ASSUMPTIONS, LOAD COMBINATIONS, AND MATERIAL STRENGTHS.
7. THE DELEGATED DESIGN ENGINEER SHALL EXPEDITIOUSLY COORDINATE ATTACHMENT POINTS, EMBEDS, AND CLEARANCES WITH ALL ADJACENT TRADES.

NO.	DATE	DESCRIPTION
1.0	10-13-2026	ISSUE FOR BID

Hamilton County OHIO

SOUTH SCOREBOARD FACADE
1 Paycor Stadium Cincinnati, OH 45202

KZF DESIGN
Designing Better Futures

KZF DESIGN INC.
700 Broadway Street
Cincinnati, OH 45202

main 513.621.6211
kzf.com

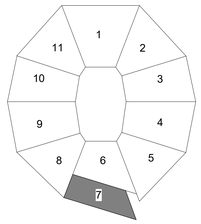

N

0 4' 8' 16'
SCALE: 1/8"=1'-0"

DESIGNED	COMM. NO.
B. RAYMOND	8445.10
DRAWN	DATE
M. ALBERS	10-13-2026
CHECKED	PROJ. MGR.
J. THAMANN	C. MAI

SOUTH SCOREBOARD FACADE PLAN

DRAWING NUMBER ISSUE
A-102 1.0

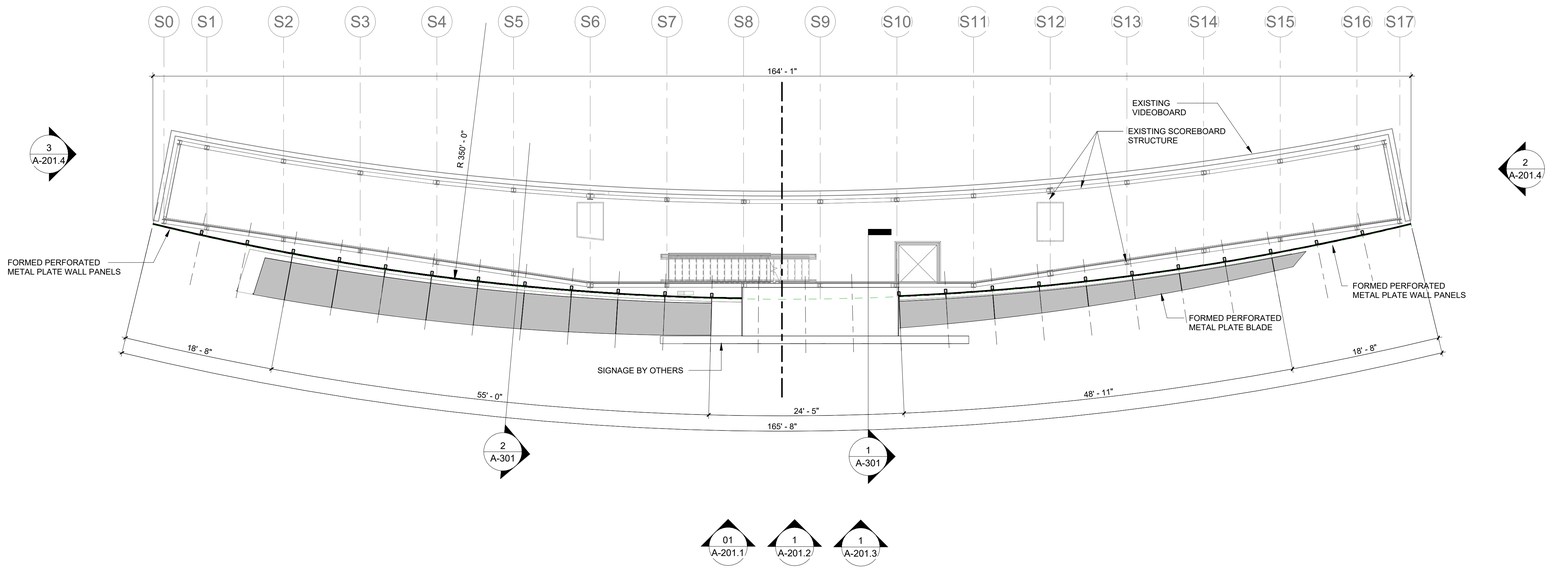

1 A-103 **TOP OF BLADE05**
1/8" = 1'-0"

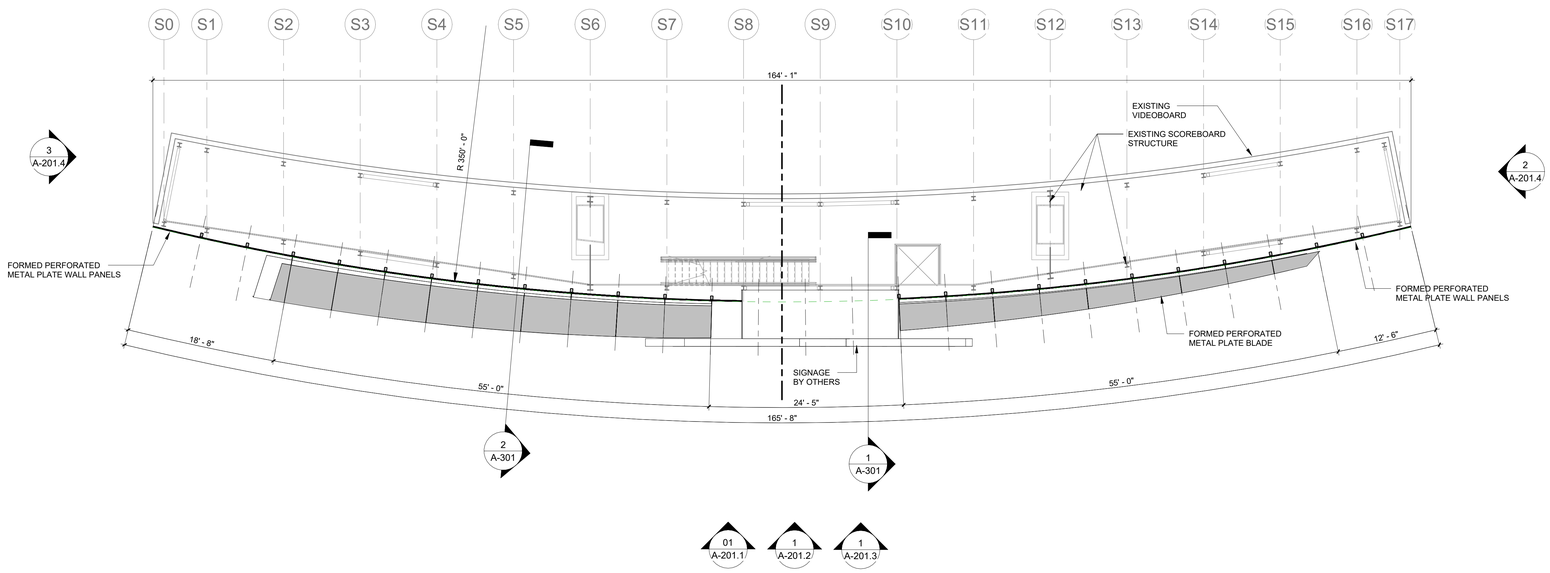

2 A-103 **TOP OF BLADE06**
1/8" = 1'-0"

GENERAL NOTES

1. REVIEW OF THE DELEGATED DESIGN SUBMITTALS BY THE ARCHITECT AND ENGINEER OF RECORD IS SOLELY FOR RECOGNITION OF GENERAL CONFORMANCE WITH THE DESIGN INTENT. DELEGATED DESIGNER RETAINS SOLE LIABILITY AND RESPONSIBILITY FOR SYSTEM PERFORMANCE, FIELD DIMENSIONS, FABRICATION TECHNIQUES, AND SAFE INSTALLATION.
2. THE DESIGN OF PERFORATED PANEL SYSTEM IS A DELEGATED DESIGN. THE DELEGATED DESIGN CONTRACTOR IS RESPONSIBLE FOR THE FINAL DETAILED ENGINEERING AND DESIGN. ALL SHOP DRAWINGS AND STRUCTURAL CALCULATIONS MUST BE PREPARED AND SEALED BY A PROFESSIONAL ENGINEER LICENSED IN THE STATE OF OHIO. DELEGATED DESIGN SHALL COMPLY WITH ALL PERFORMANCE CRITERIA AND SPECIFICATIONS.
3. THE DELEGATED DESIGN ENGINEER OF RECORD SHALL COORDINATE WITH THE ARCHITECT OF RECORD TO ENSURE AESTHETIC AND CLEARANCE REQUIREMENTS ARE MET. THE REVIEW OF SUBMITTALS BY THE ARCHITECT/ENGINEER OF RECORD IS FOR GENERAL CONFORMANCE WITH DESIGN INTENT ONLY AND DOES NOT RELIEVE THE DELEGATED DESIGNER OF FULL DESIGN RESPONSIBILITY.
4. DO NOT SCALE DRAWINGS FOR EXACT DIMENSIONS. THE DELEGATED DESIGNER IS RESPONSIBLE FOR FIELD VERIFYING ALL DIMENSIONS AND CONDITIONS PRIOR TO FINALIZING THE SHOP DRAWINGS AND FABRICATION.
5. THE DELEGATED DESIGN SYSTEM(S) INDICATED IN THE CONTRACT DOCUMENTS SHALL BE DESIGNED TO RESIST ALL DEAD, LIVE, WIND, SEISMIC, AND THERMAL LOADS IN STRICT ACCORDANCE WITH THE PREVAILING OHIO BUILDING CODE, AND ALL LOCAL AMENDMENTS. THE SPECIFIED SYSTEM PERFORMANCE CRITERIA SHALL TAKE PRECEDENCE OVER GENERAL DETAILS IN THE EVENT OF A CONFLICT.
6. THE DELEGATED DESIGNER SHALL SUBMIT COMPLETE SHOP DRAWINGS, PRODUCT DATA, AND STRUCTURAL CALCULATIONS FOR ALL DELEGATED DESIGN ITEMS. ALL SUBMITTALS MUST BEAR THE SIGNATURE AND DEPOSITED SEAL OF A REGISTERED PROFESSIONAL ENGINEER LICENSED IN THE STATE OF OHIO. INDEPENDENT STRUCTURAL CALCULATIONS MUST BE REPRODUCIBLE AND CLEARLY STATE ALL DESIGN ASSUMPTIONS, LOAD COMBINATIONS, AND MATERIAL STRENGTHS.
7. THE DELEGATED DESIGN ENGINEER SHALL EXPEDITIOUSLY COORDINATE ATTACHMENT POINTS, EMBEDS, AND CLEARANCES WITH ALL ADJACENT TRADES.

NO.	DATE	DESCRIPTION
1.0	10-13-2026	ISSUE FOR BID

Hamilton County OHIO

SOUTH SCOREBOARD FACADE
1 Paycor Stadium Cincinnati, OH 45202

KZF DESIGN
Designing Better Futures

KZF DESIGN INC.
700 Broadway Street
Cincinnati, OH 45202

main 513.621.6211
kzf.com

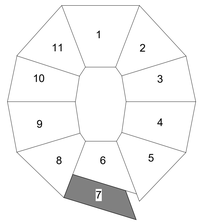

N

0 4' 8' 16'
SCALE: 1/8"=1'-0"

DESIGNED	COMM. NO.
B. RAYMOND	8445.10
DRAWN	DATE
M. ALBERS	10-13-2026
CHECKED	PROJ. MGR.
J. THAMANN	C. MAI

SOUTH SCOREBOARD FACADE PLAN

DRAWING NUMBER	ISSUE
A-103	1.0

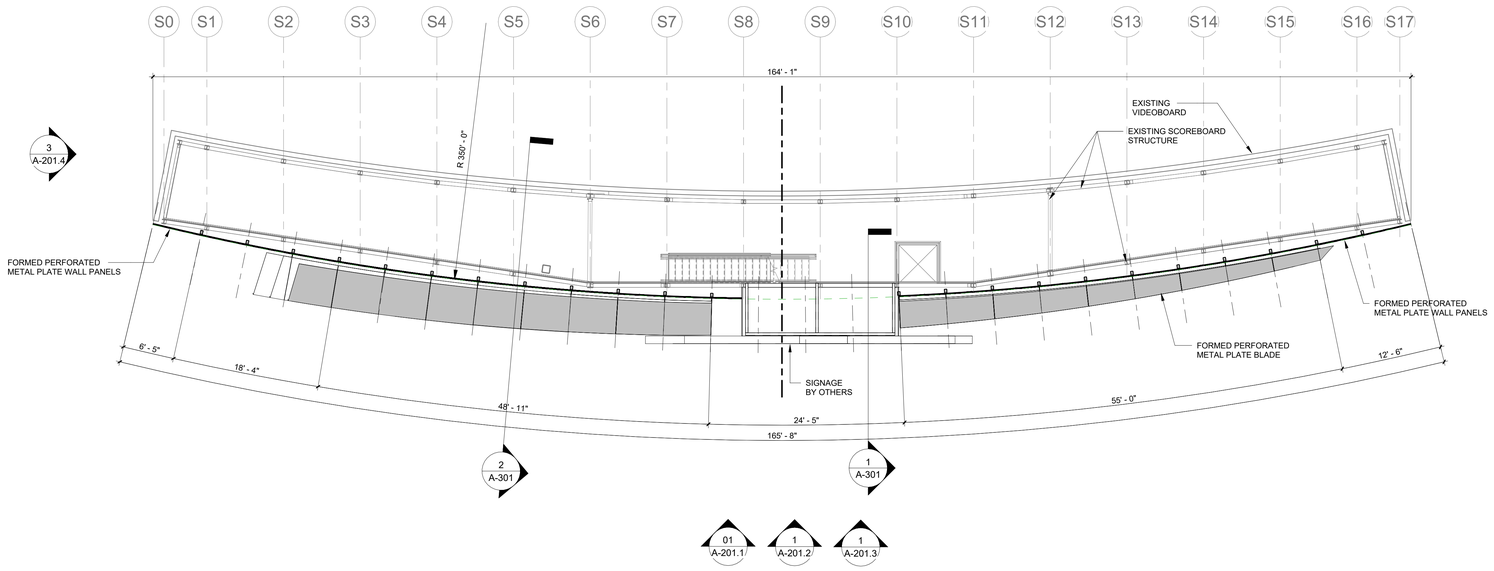

1 A-104 **TOP OF BLADE07**
1/8" = 1'-0"

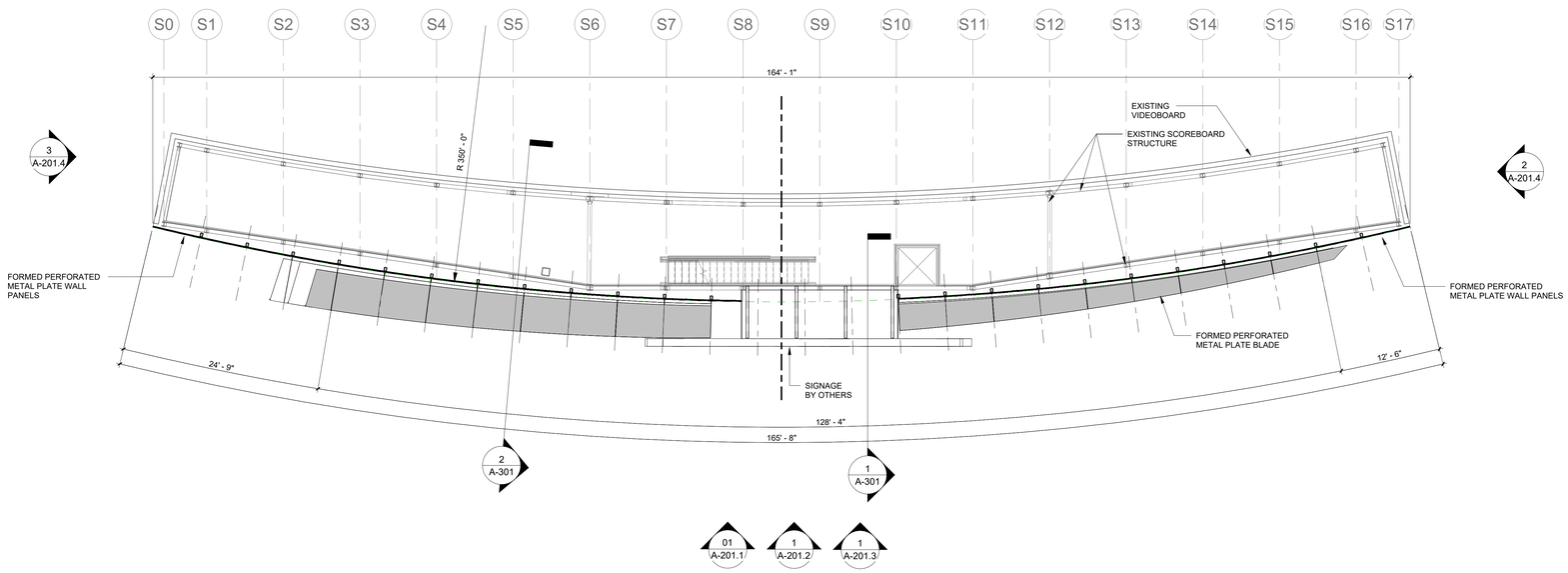

2 A-104 **TOP OF BLADE08**
1/8" = 1'-0"

GENERAL NOTES

1. REVIEW OF THE DELEGATED DESIGN SUBMITTALS BY THE ARCHITECT AND ENGINEER OF RECORD IS SOLELY FOR RECOGNITION OF GENERAL CONFORMANCE WITH THE DESIGN INTENT. DELEGATED DESIGNER RETAINS SOLE LIABILITY AND RESPONSIBILITY FOR SYSTEM PERFORMANCE, FIELD DIMENSIONS, FABRICATION TECHNIQUES, AND SAFE INSTALLATION.
2. THE DESIGN OF PERFORATED PANEL SYSTEM IS A DELEGATED DESIGN. THE DELEGATED DESIGN CONTRACTOR IS RESPONSIBLE FOR THE FINAL DETAILED ENGINEERING AND DESIGN. ALL SHOP DRAWINGS AND STRUCTURAL CALCULATIONS MUST BE PREPARED AND SEALED BY A PROFESSIONAL ENGINEER LICENSED IN THE STATE OF OHIO. DELEGATED DESIGN SHALL COMPLY WITH ALL PERFORMANCE CRITERIA AND SPECIFICATIONS.
3. THE DELEGATED DESIGN ENGINEER OF RECORD SHALL COORDINATE WITH THE ARCHITECT OF RECORD TO ENSURE AESTHETIC AND CLEARANCE REQUIREMENTS ARE MET. THE REVIEW OF SUBMITTALS BY THE ARCHITECT/ENGINEER OF RECORD IS FOR GENERAL CONFORMANCE WITH DESIGN INTENT ONLY AND DOES NOT RELIEVE THE DELEGATED DESIGNER OF FULL DESIGN RESPONSIBILITY.
4. DO NOT SCALE DRAWINGS FOR EXACT DIMENSIONS. THE DELEGATED DESIGNER IS RESPONSIBLE FOR FIELD VERIFYING ALL DIMENSIONS AND CONDITIONS PRIOR TO FINALIZING THE SHOP DRAWINGS AND FABRICATION.
5. THE DELEGATED DESIGN SYSTEM(S) INDICATED IN THE CONTRACT DOCUMENTS SHALL BE DESIGNED TO RESIST ALL DEAD, LIVE, WIND, SEISMIC, AND THERMAL LOADS IN STRICT ACCORDANCE WITH THE PREVAILING OHIO BUILDING CODE, AND ALL LOCAL AMENDMENTS. THE SPECIFIED SYSTEM PERFORMANCE CRITERIA SHALL TAKE PRECEDENCE OVER GENERAL DETAILS IN THE EVENT OF A CONFLICT.
6. THE DELEGATED DESIGNER SHALL SUBMIT COMPLETE SHOP DRAWINGS, PRODUCT DATA, AND STRUCTURAL CALCULATIONS FOR ALL DELEGATED DESIGN ITEMS. ALL SUBMITTALS MUST BEAR THE SIGNATURE AND DEPOSITED SEAL OF A REGISTERED PROFESSIONAL ENGINEER LICENSED IN THE STATE OF OHIO. INDEPENDENT STRUCTURAL CALCULATIONS MUST BE REPRODUCIBLE AND CLEARLY STATE ALL DESIGN ASSUMPTIONS, LOAD COMBINATIONS, AND MATERIAL STRENGTHS.
7. THE DELEGATED DESIGN ENGINEER SHALL EXPEDITIOUSLY COORDINATE ATTACHMENT POINTS, EMBEDS, AND CLEARANCES WITH ALL ADJACENT TRADES.

NO.	DATE	DESCRIPTION
1.0	10-13-2026	ISSUE FOR BID

Hamilton County OHIO

SOUTH SCOREBOARD FACADE
1 Paycor Stadium Cincinnati, OH 45202

KZF DESIGN
Designing Better Futures

KZF DESIGN INC.
700 Broadway Street
Cincinnati, OH 45202

main 513.621.6211
kzf.com

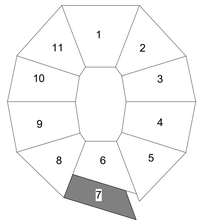

N

0 4' 8' 16'
SCALE: 1/8"=1'-0"

DESIGNED	COMM. NO.
B. RAYMOND	8445.10
DRAWN	DATE
M. ALBERS	10-13-2026
CHECKED	PROJ. MGR.
J. THAMANN	C. MAI

SOUTH SCOREBOARD FACADE PLAN

DRAWING NUMBER	ISSUE
A-104	1.0

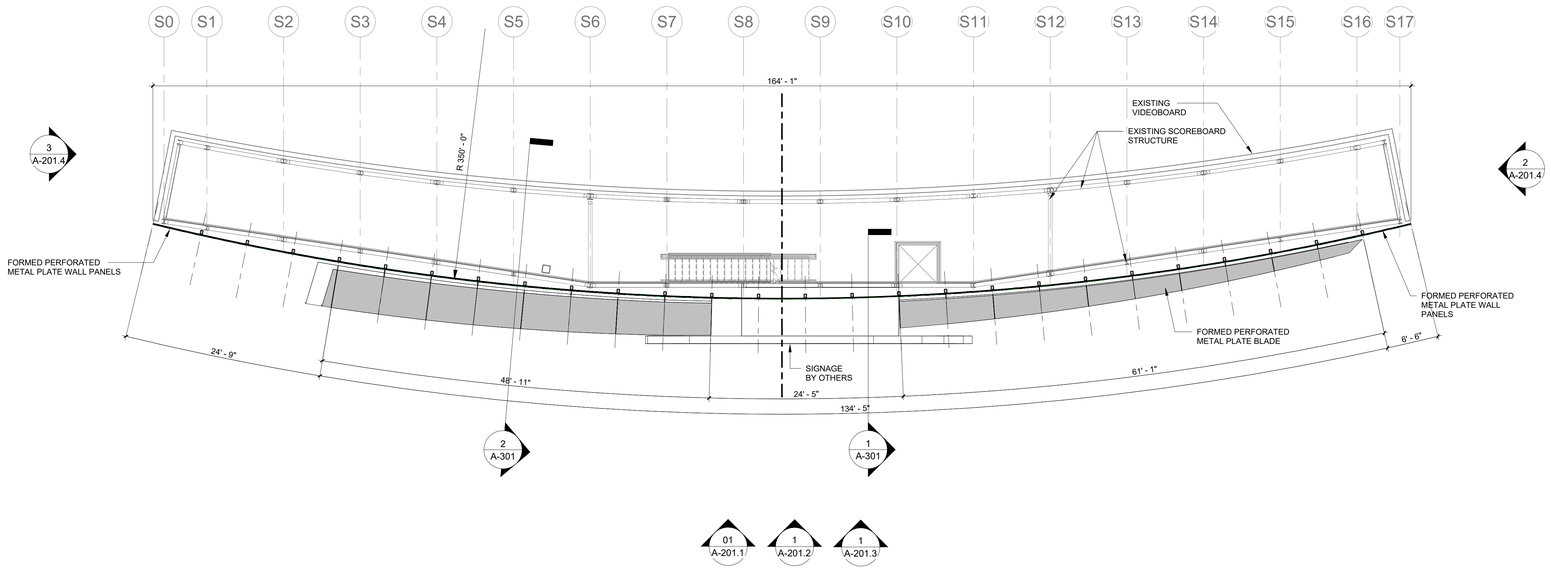

1 A-105 **TOP OF BLADE09**
1/8" = 1'-0"

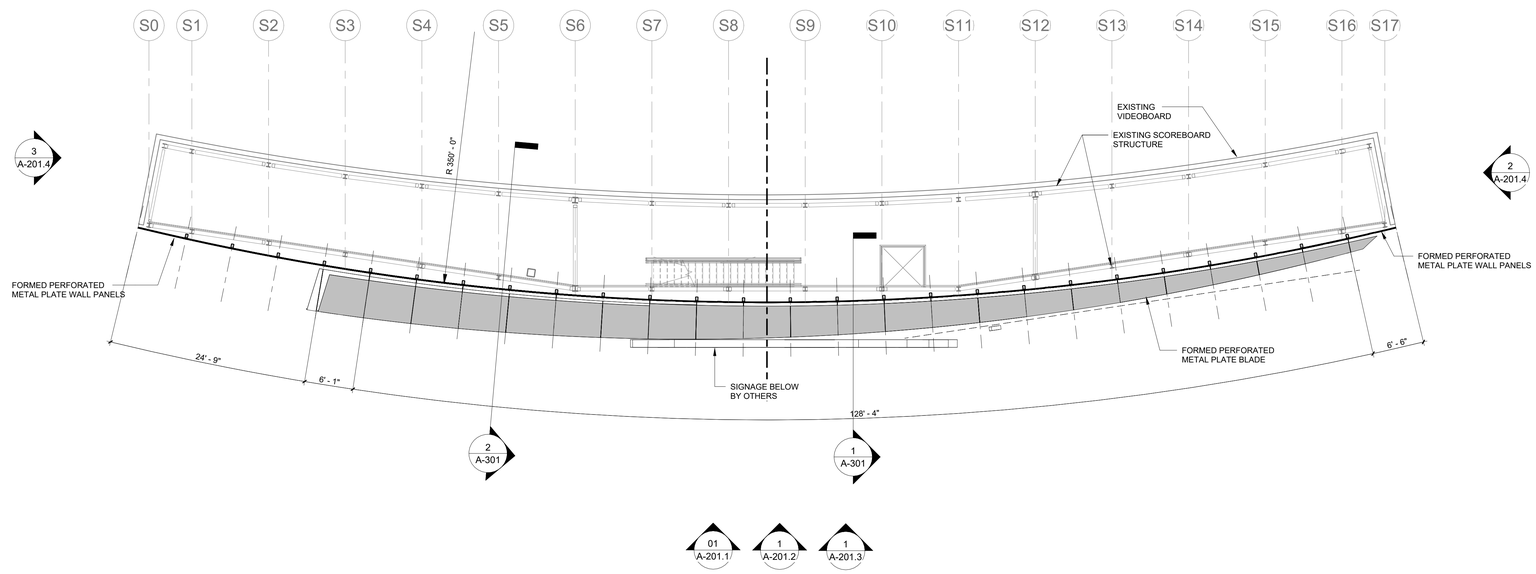

2 A-105 **TOP OF BLADE10**
1/8" = 1'-0"

GENERAL NOTES

1. REVIEW OF THE DELEGATED DESIGN SUBMITTALS BY THE ARCHITECT AND ENGINEER OF RECORD IS SOLELY FOR RECOGNITION OF GENERAL CONFORMANCE WITH THE DESIGN INTENT. DELEGATED DESIGNER RETAINS SOLE LIABILITY AND RESPONSIBILITY FOR SYSTEM PERFORMANCE, FIELD DIMENSIONS, FABRICATION TECHNIQUES, AND SAFE INSTALLATION.
2. THE DESIGN OF PERFORATED PANEL SYSTEM IS A DELEGATED DESIGN. THE DELEGATED DESIGN CONTRACTOR IS RESPONSIBLE FOR THE FINAL DETAILED ENGINEERING AND DESIGN. ALL SHOP DRAWINGS AND STRUCTURAL CALCULATIONS MUST BE PREPARED AND SEALED BY A PROFESSIONAL ENGINEER LICENSED IN THE STATE OF OHIO. DELEGATED DESIGN SHALL COMPLY WITH ALL PERFORMANCE CRITERIA AND SPECIFICATIONS.
3. THE DELEGATED DESIGN ENGINEER OF RECORD SHALL COORDINATE WITH THE ARCHITECT OF RECORD TO ENSURE AESTHETIC AND CLEARANCE REQUIREMENTS ARE MET. THE REVIEW OF SUBMITTALS BY THE ARCHITECT/ENGINEER OF RECORD IS FOR GENERAL CONFORMANCE WITH DESIGN INTENT ONLY AND DOES NOT RELIEVE THE DELEGATED DESIGNER OF FULL DESIGN RESPONSIBILITY.
4. DO NOT SCALE DRAWINGS FOR EXACT DIMENSIONS. THE DELEGATED DESIGNER IS RESPONSIBLE FOR FIELD VERIFYING ALL DIMENSIONS AND CONDITIONS PRIOR TO FINALIZING THE SHOP DRAWINGS AND FABRICATION.
5. THE DELEGATED DESIGN SYSTEM(S) INDICATED IN THE CONTRACT DOCUMENTS SHALL BE DESIGNED TO RESIST ALL DEAD, LIVE, WIND, SEISMIC, AND THERMAL LOADS IN STRICT ACCORDANCE WITH THE PREVAILING OHIO BUILDING CODE, AND ALL LOCAL AMENDMENTS. THE SPECIFIED SYSTEM PERFORMANCE CRITERIA SHALL TAKE PRECEDENCE OVER GENERAL DETAILS IN THE EVENT OF A CONFLICT.
6. THE DELEGATED DESIGNER SHALL SUBMIT COMPLETE SHOP DRAWINGS, PRODUCT DATA, AND STRUCTURAL CALCULATIONS FOR ALL DELEGATED DESIGN ITEMS. ALL SUBMITTALS MUST BEAR THE SIGNATURE AND DEPOSITED SEAL OF A REGISTERED PROFESSIONAL ENGINEER LICENSED IN THE STATE OF OHIO. INDEPENDENT STRUCTURAL CALCULATIONS MUST BE REPRODUCIBLE AND CLEARLY STATE ALL DESIGN ASSUMPTIONS, LOAD COMBINATIONS, AND MATERIAL STRENGTHS.
7. THE DELEGATED DESIGN ENGINEER SHALL EXPEDITIOUSLY COORDINATE ATTACHMENT POINTS, EMBEDS, AND CLEARANCES WITH ALL ADJACENT TRADES.

NO.	DATE	DESCRIPTION
1.0	10-13-2026	ISSUE FOR BID

Hamilton County OHIO

SOUTH SCOREBOARD FACADE
1 Paycor Stadium Cincinnati, OH 45202

KZF DESIGN
Designing Better Futures

KZF DESIGN INC.
700 Broadway Street
Cincinnati, OH 45202

main 513.621.6211
kzf.com

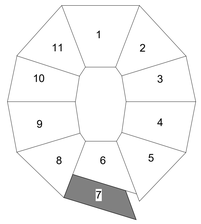

N

0 4' 8' 16'
SCALE: 1/8"=1'-0"

DESIGNED	COMM. NO.
B. RAYMOND	8445.10
DRAWN	DATE
M. ALBERS	10-13-2026
CHECKED	PROJ. MGR.
J. THAMANN	C. MAI

SOUTH SCOREBOARD FACADE PLAN

DRAWING NUMBER ISSUE
A-105 1.0

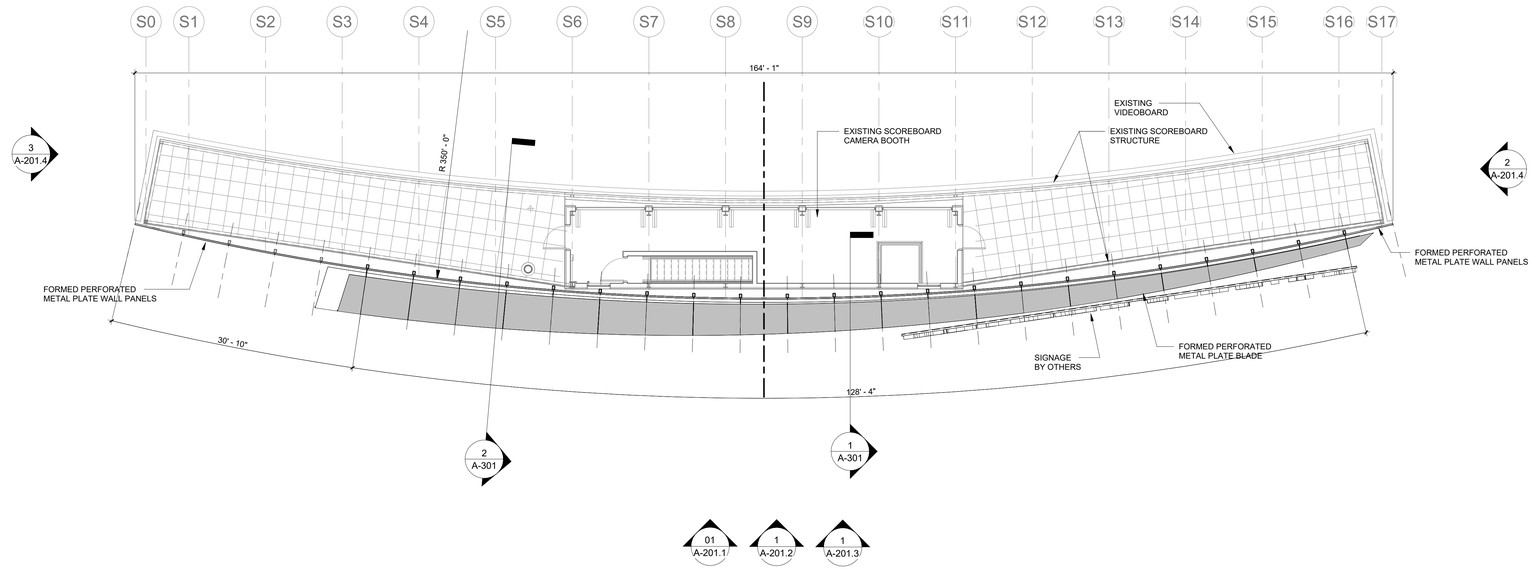

1 A-106 **TOP OF BLADE11**
1/8" = 1'-0"

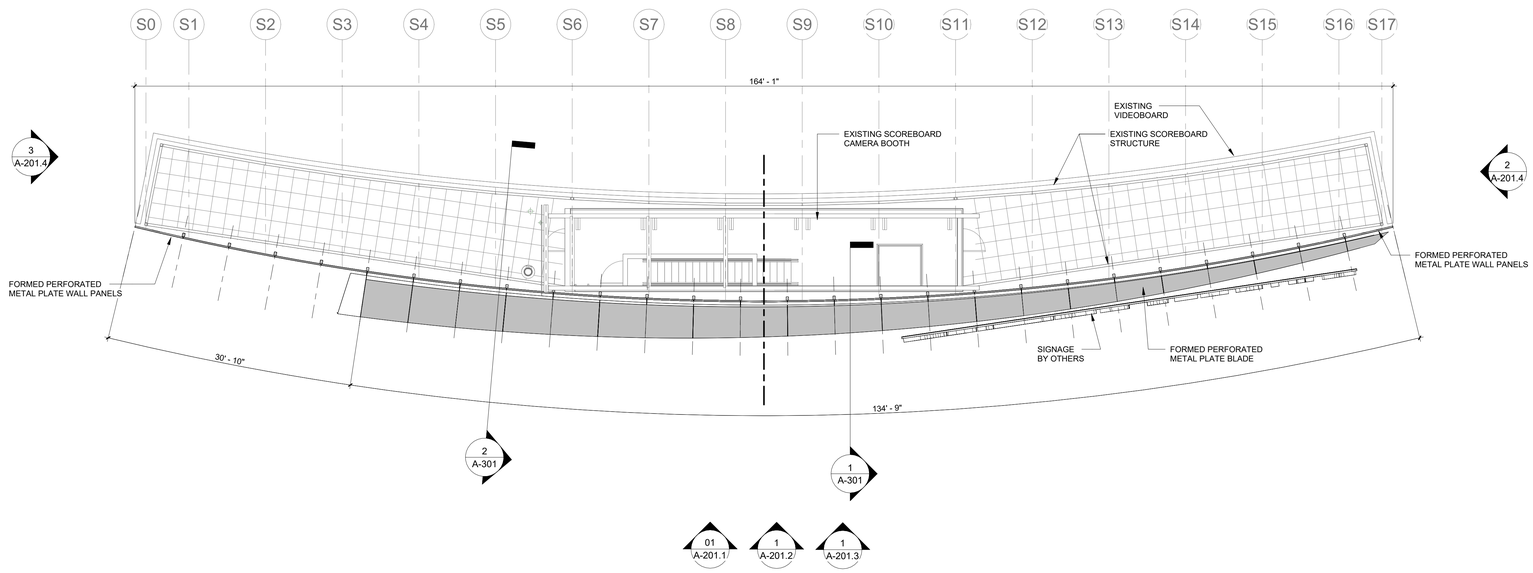

2 A-106 **TOP OF BLADE12**
1/8" = 1'-0"

GENERAL NOTES

1. REVIEW OF THE DELEGATED DESIGN SUBMITTALS BY THE ARCHITECT AND ENGINEER OF RECORD IS SOLELY FOR RECOGNITION OF GENERAL CONFORMANCE WITH THE DESIGN INTENT. DELEGATED DESIGNER RETAINS SOLE LIABILITY AND RESPONSIBILITY FOR SYSTEM PERFORMANCE, FIELD DIMENSIONS, FABRICATION TECHNIQUES, AND SAFE INSTALLATION.
2. THE DESIGN OF PERFORATED PANEL SYSTEM IS A DELEGATED DESIGN. THE DELEGATED DESIGN CONTRACTOR IS RESPONSIBLE FOR THE FINAL DETAILED ENGINEERING AND DESIGN. ALL SHOP DRAWINGS AND STRUCTURAL CALCULATIONS MUST BE PREPARED AND SEALED BY A PROFESSIONAL ENGINEER LICENSED IN THE STATE OF OHIO. DELEGATED DESIGN SHALL COMPLY WITH ALL PERFORMANCE CRITERIA AND SPECIFICATIONS.
3. THE DELEGATED DESIGN ENGINEER OF RECORD SHALL COORDINATE WITH THE ARCHITECT OF RECORD TO ENSURE AESTHETIC AND CLEARANCE REQUIREMENTS ARE MET. THE REVIEW OF SUBMITTALS BY THE ARCHITECT/ENGINEER OF RECORD IS FOR GENERAL CONFORMANCE WITH DESIGN INTENT ONLY AND DOES NOT RELIEVE THE DELEGATED DESIGNER OF FULL DESIGN RESPONSIBILITY.
4. DO NOT SCALE DRAWINGS FOR EXACT DIMENSIONS. THE DELEGATED DESIGNER IS RESPONSIBLE FOR FIELD VERIFYING ALL DIMENSIONS AND CONDITIONS PRIOR TO FINALIZING THE SHOP DRAWINGS AND FABRICATION.
5. THE DELEGATED DESIGN SYSTEM(S) INDICATED IN THE CONTRACT DOCUMENTS SHALL BE DESIGNED TO RESIST ALL DEAD, LIVE, WIND, SEISMIC, AND THERMAL LOADS IN STRICT ACCORDANCE WITH THE PREVAILING OHIO BUILDING CODE, AND ALL LOCAL AMENDMENTS. THE SPECIFIED SYSTEM PERFORMANCE CRITERIA SHALL TAKE PRECEDENCE OVER GENERAL DETAILS IN THE EVENT OF A CONFLICT.
6. THE DELEGATED DESIGNER SHALL SUBMIT COMPLETE SHOP DRAWINGS, PRODUCT DATA, AND STRUCTURAL CALCULATIONS FOR ALL DELEGATED DESIGN ITEMS. ALL SUBMITTALS MUST BEAR THE SIGNATURE AND DEPOSITED SEAL OF A REGISTERED PROFESSIONAL ENGINEER LICENSED IN THE STATE OF OHIO. INDEPENDENT STRUCTURAL CALCULATIONS MUST BE REPRODUCIBLE AND CLEARLY STATE ALL DESIGN ASSUMPTIONS, LOAD COMBINATIONS, AND MATERIAL STRENGTHS.
7. THE DELEGATED DESIGN ENGINEER SHALL EXPEDITIOUSLY COORDINATE ATTACHMENT POINTS, EMBEDS, AND CLEARANCES WITH ALL ADJACENT TRADES.

NO.	DATE	DESCRIPTION
1.0	10-13-2026	ISSUE FOR BID

Hamilton County OHIO

SOUTH SCOREBOARD FACADE
1 Paycor Stadium Cincinnati, OH 45202

KZF DESIGN
Designing Better Futures

KZF DESIGN INC.
700 Broadway Street
Cincinnati, OH 45202

main 513.621.6211
kzf.com

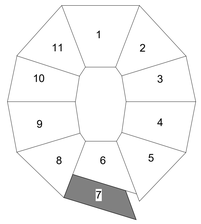

N

0 4' 8' 16'
SCALE: 1/8"=1'-0"

DESIGNED	COMM. NO.
B. RAYMOND	8445.10
DRAWN	DATE
M. ALBERS	10-13-2026
CHECKED	PROJ. MGR.
J. THAMANN	C. MAI

SOUTH SCOREBOARD FACADE PLAN

DRAWING NUMBER	ISSUE
A-106	1.0

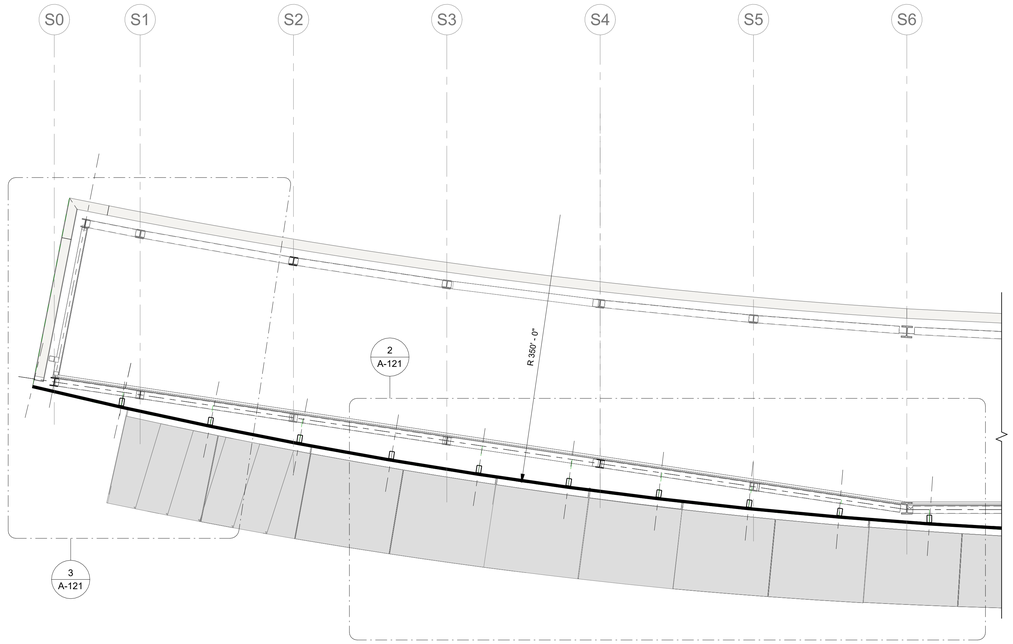

1 A-121 **SOUTH SCOREBOARD - PARTIAL PLAN**
1/4" = 1'-0"

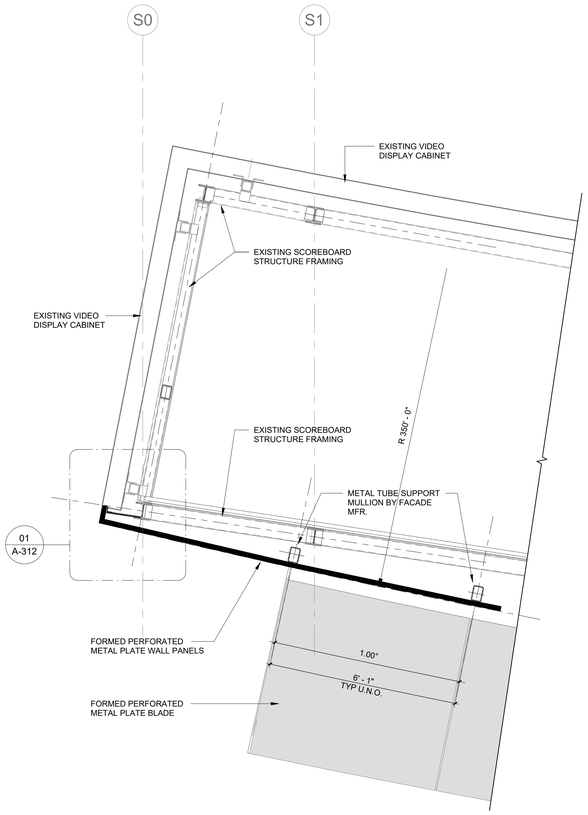

3 A-121 **DETAIL**
1/2" = 1'-0"

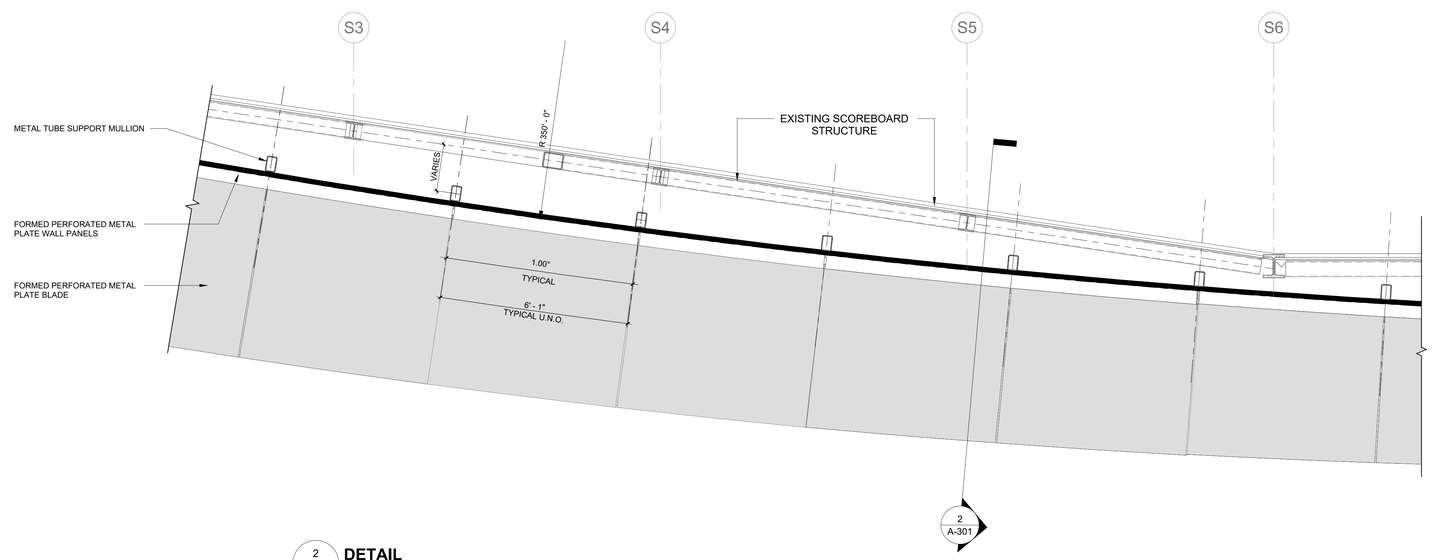

2 A-121 **DETAIL**
1/2" = 1'-0"

GENERAL NOTES

1. REVIEW OF THE DELEGATED DESIGN SUBMITTALS BY THE ARCHITECT AND ENGINEER OF RECORD IS SOLELY FOR RECOGNITION OF GENERAL CONFORMANCE WITH THE DESIGN INTENT. DELEGATED DESIGNER RETAINS SOLE LIABILITY AND RESPONSIBILITY FOR SYSTEM PERFORMANCE, FIELD DIMENSIONS, FABRICATION TECHNIQUES, AND SAFE INSTALLATION.
2. THE DESIGN OF PERFORATED PANEL SYSTEM IS A DELEGATED DESIGN. THE DELEGATED DESIGN CONTRACTOR IS RESPONSIBLE FOR THE FINAL DETAILED ENGINEERING AND DESIGN. ALL SHOP DRAWINGS AND STRUCTURAL CALCULATIONS MUST BE PREPARED AND SEALED BY A PROFESSIONAL ENGINEER LICENSED IN THE STATE OF OHIO. DELEGATED DESIGN SHALL COMPLY WITH ALL PERFORMANCE CRITERIA AND SPECIFICATIONS.
3. THE DELEGATED DESIGN ENGINEER OF RECORD SHALL COORDINATE WITH THE ARCHITECT OF RECORD TO ENSURE AESTHETIC AND CLEARANCE REQUIREMENTS ARE MET. THE REVIEW OF SUBMITTALS BY THE ARCHITECT/ENGINEER OF RECORD IS FOR GENERAL CONFORMANCE WITH DESIGN INTENT ONLY AND DOES NOT RELIEVE THE DELEGATED DESIGNER OF FULL DESIGN RESPONSIBILITY.
4. DO NOT SCALE DRAWINGS FOR EXACT DIMENSIONS. THE DELEGATED DESIGNER IS RESPONSIBLE FOR FIELD VERIFYING ALL DIMENSIONS AND CONDITIONS PRIOR TO FINALIZING THE SHOP DRAWINGS AND FABRICATION.
5. THE DELEGATED DESIGN SYSTEM(S) INDICATED IN THE CONTRACT DOCUMENTS SHALL BE DESIGNED TO RESIST ALL DEAD, LIVE, WIND, SEISMIC, AND THERMAL LOADS IN STRICT ACCORDANCE WITH THE PREVAILING OHIO BUILDING CODE, AND ALL LOCAL AMENDMENTS. THE SPECIFIED SYSTEM PERFORMANCE CRITERIA SHALL TAKE PRECEDENCE OVER GENERAL DETAILS IN THE EVENT OF A CONFLICT.
6. THE DELEGATED DESIGNER SHALL SUBMIT COMPLETE SHOP DRAWINGS, PRODUCT DATA, AND STRUCTURAL CALCULATIONS FOR ALL DELEGATED DESIGN ITEMS. ALL SUBMITTALS MUST BEAR THE SIGNATURE AND DEPOSITED SEAL OF A REGISTERED PROFESSIONAL ENGINEER LICENSED IN THE STATE OF OHIO. INDEPENDENT STRUCTURAL CALCULATIONS MUST BE REPRODUCIBLE AND CLEARLY STATE ALL DESIGN ASSUMPTIONS, LOAD COMBINATIONS, AND MATERIAL STRENGTHS.
7. THE DELEGATED DESIGN ENGINEER SHALL EXPEDITIOUSLY COORDINATE ATTACHMENT POINTS, EMBEDS, AND CLEARANCES WITH ALL ADJACENT TRADES.

NO.	DATE	DESCRIPTION
1.0	10-13-2026	ISSUE FOR BID

Hamilton County OHIO

SOUTH SCOREBOARD FACADE
1 Paycor Stadium Cincinnati, OH 45202

KZF DESIGN
Designing Better Futures

KZF DESIGN INC.
700 Broadway Street
Cincinnati, OH 45202

main 513.621.6211
kzf.com

DESIGNED	COMM. NO.
B. RAYMOND	8445.10
DRAWN	DATE
M. ALBERS	10-13-2026
CHECKED	PROJ. MGR.
J. THAMANN	C. MAI

SCOREBOARD FACADE PLAN DETAILS

DRAWING NUMBER ISSUE
A-121 1.0

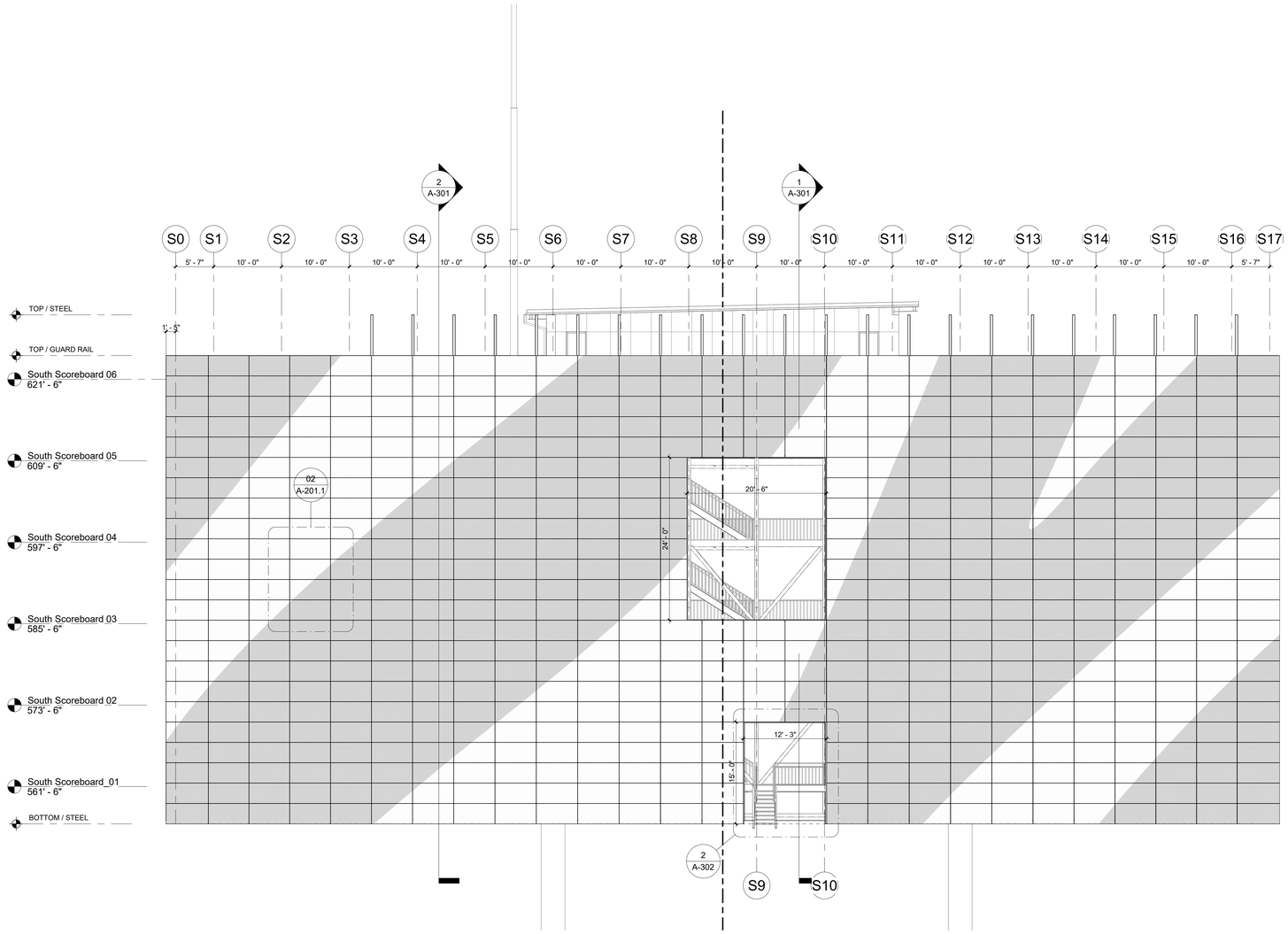

01 A-201.1 SOUTH SCOREBOARD ELEVATION - PERFORATED PANEL FACADE

1/8" = 1'-0"

PERFORATION PATTERN A

PERFORATION PATTERN B

SOUTH SCOREBOARD PERFORATED PANEL AREA = +/- 11,167 sf

GENERAL NOTES

1. REVIEW OF THE DELEGATED DESIGN SUBMITTALS BY THE ARCHITECT AND ENGINEER OF RECORD IS SOLELY FOR RECOGNITION OF GENERAL CONFORMANCE WITH THE DESIGN INTENT. DELEGATED DESIGNER RETAINS SOLE LIABILITY AND RESPONSIBILITY FOR SYSTEM PERFORMANCE, FIELD DIMENSIONS, FABRICATION TECHNIQUES, AND SAFE INSTALLATION.
2. THE DESIGN OF PERFORATED PANEL SYSTEM IS A DELEGATED DESIGN. THE DELEGATED DESIGN CONTRACTOR IS RESPONSIBLE FOR THE FINAL DETAILED ENGINEERING AND DESIGN. ALL SHOP DRAWINGS AND STRUCTURAL CALCULATIONS MUST BE PREPARED AND SEALED BY A PROFESSIONAL ENGINEER LICENSED IN THE STATE OF OHIO. DELEGATED DESIGN SHALL COMPLY WITH ALL PERFORMANCE CRITERIA AND SPECIFICATIONS.
3. THE DELEGATED DESIGN ENGINEER OF RECORD SHALL COORDINATE WITH THE ARCHITECT OF RECORD TO ENSURE AESTHETIC AND CLEARANCE REQUIREMENTS ARE MET. THE REVIEW OF SUBMITTALS BY THE ARCHITECT/ENGINEER OF RECORD IS FOR GENERAL CONFORMANCE WITH DESIGN INTENT ONLY AND DOES NOT RELIEVE THE DELEGATED DESIGNER OF FULL DESIGN RESPONSIBILITY.
4. DO NOT SCALE DRAWINGS FOR EXACT DIMENSIONS. THE DELEGATED DESIGNER IS RESPONSIBLE FOR FIELD VERIFYING ALL DIMENSIONS AND CONDITIONS PRIOR TO FINALIZING THE SHOP DRAWINGS AND FABRICATION.
5. THE DELEGATED DESIGN SYSTEM(S) INDICATED IN THE CONTRACT DOCUMENTS SHALL BE DESIGNED TO RESIST ALL DEAD, LIVE, WIND, SEISMIC, AND THERMAL LOADS IN STRICT ACCORDANCE WITH THE PREVAILING OHIO BUILDING CODE, AND ALL LOCAL AMENDMENTS. THE SPECIFIED SYSTEM PERFORMANCE CRITERIA SHALL TAKE PRECEDENCE OVER GENERAL DETAILS IN THE EVENT OF A CONFLICT.
6. THE DELEGATED DESIGNER SHALL SUBMIT COMPLETE SHOP DRAWINGS, PRODUCT DATA, AND STRUCTURAL CALCULATIONS FOR ALL DELEGATED DESIGN ITEMS. ALL SUBMITTALS MUST BEAR THE SIGNATURE AND DEPOSITED SEAL OF A REGISTERED PROFESSIONAL ENGINEER LICENSED IN THE STATE OF OHIO. INDEPENDENT STRUCTURAL CALCULATIONS MUST BE REPRODUCIBLE AND CLEARLY STATE ALL DESIGN ASSUMPTIONS, LOAD COMBINATIONS, AND MATERIAL STRENGTHS.
7. THE DELEGATED DESIGN ENGINEER SHALL EXPEDITIOUSLY COORDINATE ATTACHMENT POINTS, EMBEDS, AND CLEARANCES WITH ALL ADJACENT TRADES.

PATTERN A

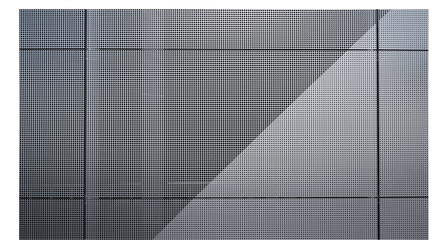

PATTERN B

5 A-201.1 PERFORATED PANEL RENDERING

1/8" = 1'-0"

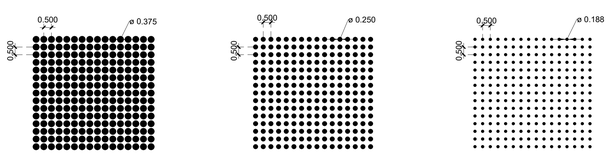

STRIPE PATTERN A
40% OPEN AREA

0.375-INCH DIAMETER ROUND
0.50 INCH CENTERS

STRIPE PATTERN B
18% OPEN AREA

0.250-INCH DIAMETER ROUND
0.50 INCH CENTERS

BLADE PATTERN
10% OPEN AREA

0.1875-INCH DIAMETER ROUND
0.50 INCH CENTERS

PERFORATION PATTERNS

PATTERN A

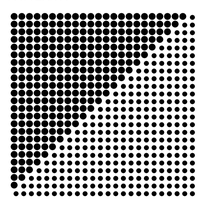

PATTERN B

04 A-201.1 PERFORATED PATTERN JOINT

3" = 1'-0"

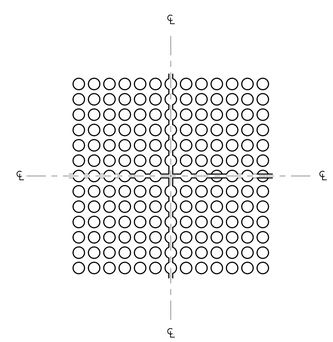

03 A-201.1 TYPICAL CROSS SEAM/JOINT PERFORATION

6" = 1'-0"

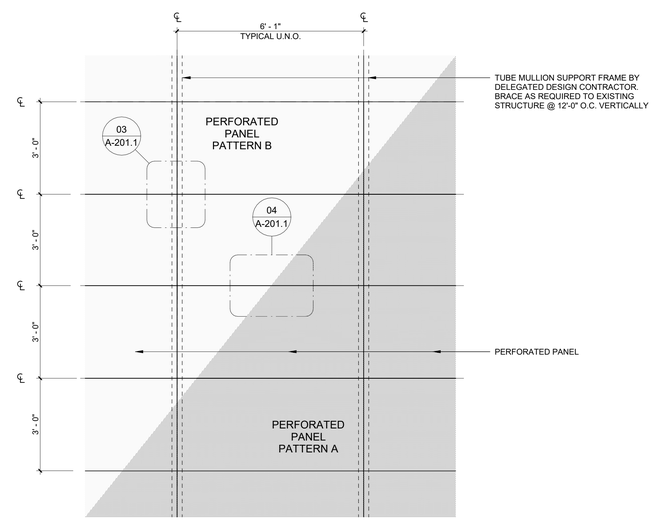

02 A-201.1 ENLARGED PERFORATED PANEL ELEVATION

1/2" = 1'-0"

NO.	DATE	DESCRIPTION
1.0	10-13-2026	ISSUE FOR BID

Hamilton County OHIO

SOUTH SCOREBOARD FACADE

1 Paycor Stadium Cincinnati, OH 45202

KZF DESIGN
Designing Better Futures

KZF DESIGN INC.
700 Broadway Street
Cincinnati, OH 45202

main 513.621.6211
kzf.com

DESIGNED	COMM. NO.
B. RAYMOND	8445.10
DRAWN	DATE
M. ALBERS	10-13-2026
CHECKED	PROJ. MGR.
J. THAMANN	C. MAI

SOUTH SCOREBOARD FACADE ELEVATIONS

DRAWING NUMBER ISSUE

A-201.1 1.0

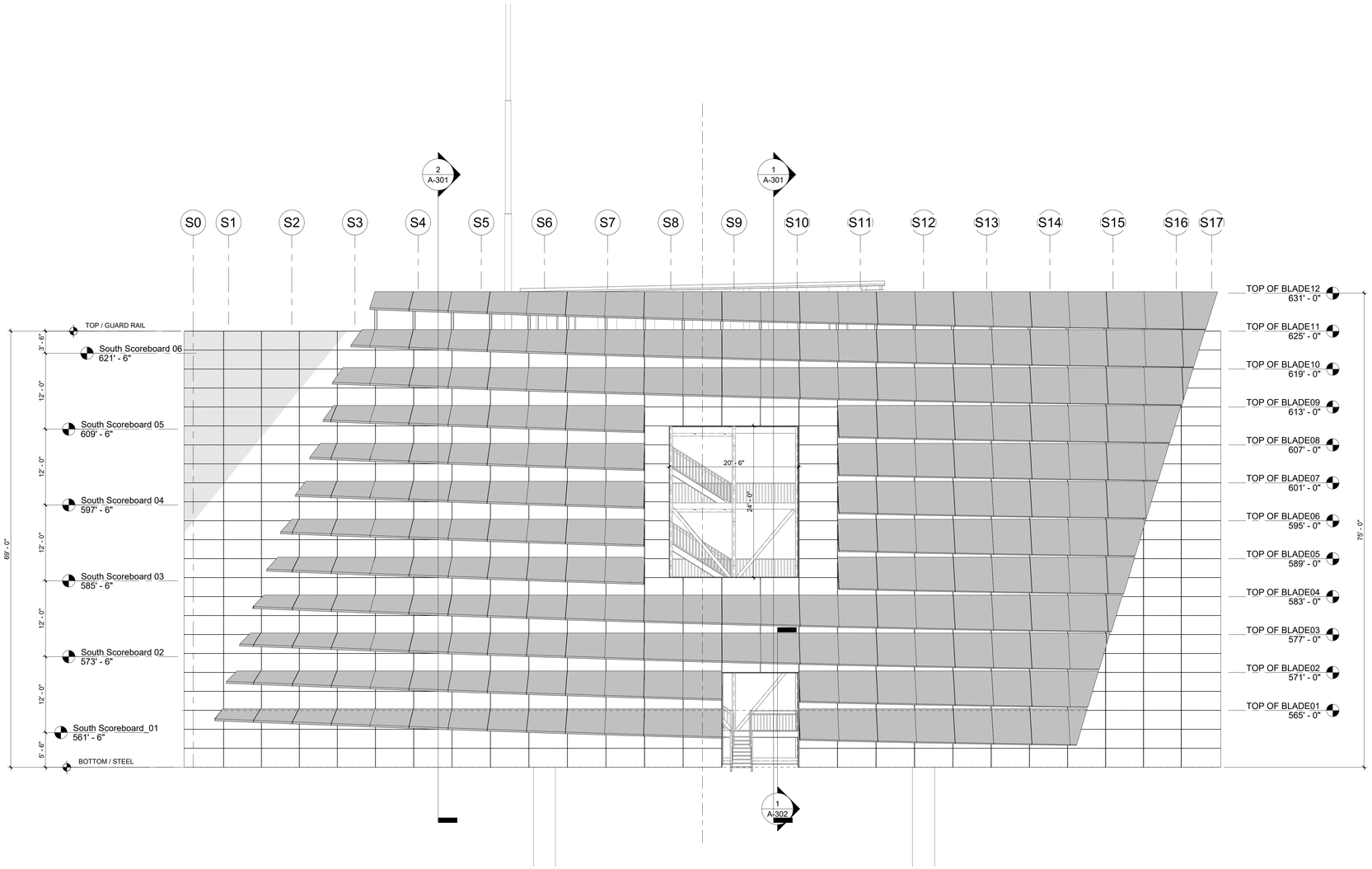

1 A-201.2 **SOUTH SCOREBOARD ELEVATION - PERFORATED PANEL LOUVERS**
1/8" = 1'-0"

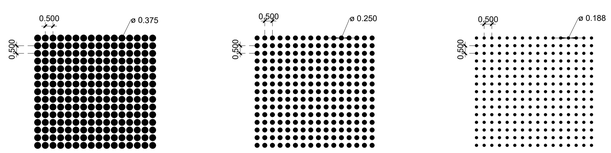

STRIPE PATTERN A
40% OPEN AREA

0.375-INCH DIAMETER ROUND
0.50 INCH CENTERS

STRIPE PATTERN B
18% OPEN AREA

0.250-INCH DIAMETER ROUND
0.50 INCH CENTERS

BLADE PATTERN
10% OPEN AREA

0.1875-INCH DIAMETER ROUND
0.50 INCH CENTERS

PERFORATION PATTERNS

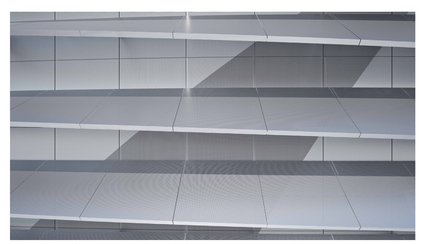

BLADE ASSEMBLY RENDERINGS

GENERAL NOTES

1. REVIEW OF THE DELEGATED DESIGN SUBMITTALS BY THE ARCHITECT AND ENGINEER OF RECORD IS SOLELY FOR RECOGNITION OF GENERAL CONFORMANCE WITH THE DESIGN INTENT. DELEGATED DESIGNER RETAINS SOLE LIABILITY AND RESPONSIBILITY FOR SYSTEM PERFORMANCE, FIELD DIMENSIONS, FABRICATION TECHNIQUES, AND SAFE INSTALLATION.
2. THE DESIGN OF PERFORATED PANEL SYSTEM IS A DELEGATED DESIGN. THE DELEGATED DESIGN CONTRACTOR IS RESPONSIBLE FOR THE FINAL DETAILED ENGINEERING AND DESIGN. ALL SHOP DRAWINGS AND STRUCTURAL CALCULATIONS MUST BE PREPARED AND SEALED BY A PROFESSIONAL ENGINEER LICENSED IN THE STATE OF OHIO. DELEGATED DESIGN SHALL COMPLY WITH ALL PERFORMANCE CRITERIA AND SPECIFICATIONS.
3. THE DELEGATED DESIGN ENGINEER OF RECORD SHALL COORDINATE WITH THE ARCHITECT OF RECORD TO ENSURE AESTHETIC AND CLEARANCE REQUIREMENTS ARE MET. THE REVIEW OF SUBMITTALS BY THE ARCHITECT/ENGINEER OF RECORD IS FOR GENERAL CONFORMANCE WITH DESIGN INTENT ONLY AND DOES NOT RELIEVE THE DELEGATED DESIGNER OF FULL DESIGN RESPONSIBILITY.
4. DO NOT SCALE DRAWINGS FOR EXACT DIMENSIONS. THE DELEGATED DESIGNER IS RESPONSIBLE FOR FIELD VERIFYING ALL DIMENSIONS AND CONDITIONS PRIOR TO FINALIZING THE SHOP DRAWINGS AND FABRICATION.
5. THE DELEGATED DESIGN SYSTEM(S) INDICATED IN THE CONTRACT DOCUMENTS SHALL BE DESIGNED TO RESIST ALL DEAD, LIVE, WIND, SEISMIC, AND THERMAL LOADS IN STRICT ACCORDANCE WITH THE PREVAILING OHIO BUILDING CODE, AND ALL LOCAL AMENDMENTS. THE SPECIFIED SYSTEM PERFORMANCE CRITERIA SHALL TAKE PRECEDENCE OVER GENERAL DETAILS IN THE EVENT OF A CONFLICT.
6. THE DELEGATED DESIGNER SHALL SUBMIT COMPLETE SHOP DRAWINGS, PRODUCT DATA, AND STRUCTURAL CALCULATIONS FOR ALL DELEGATED DESIGN ITEMS. ALL SUBMITTALS MUST BEAR THE SIGNATURE AND DEPOSITED SEAL OF A REGISTERED PROFESSIONAL ENGINEER LICENSED IN THE STATE OF OHIO. INDEPENDENT STRUCTURAL CALCULATIONS MUST BE REPRODUCIBLE AND CLEARLY STATE ALL DESIGN ASSUMPTIONS, LOAD COMBINATIONS, AND MATERIAL STRENGTHS.
7. THE DELEGATED DESIGN ENGINEER SHALL EXPEDITIOUSLY COORDINATE ATTACHMENT POINTS, EMBEDS, AND CLEARANCES WITH ALL ADJACENT TRADES.

NO.	DATE	DESCRIPTION
1.0	10-13-2026	ISSUE FOR BID

Hamilton County OHIO

SOUTH SCOREBOARD FACADE
1 Paycor Stadium Cincinnati, OH 45202

KZF DESIGN
Designing Better Futures

KZF DESIGN INC.
700 Broadway Street
Cincinnati, OH 45202

main 513.621.6211
kzf.com

DESIGNED	COMM. NO.
B. RAYMOND	8445.10
DRAWN	DATE
M. ALBERS	10-13-2026
CHECKED	PROJ. MGR.
J. THAMANN	C. MAI

SOUTH SCOREBOARD FACADE ELEVATIONS

DRAWING NUMBER ISSUE
A-201.2 1.0

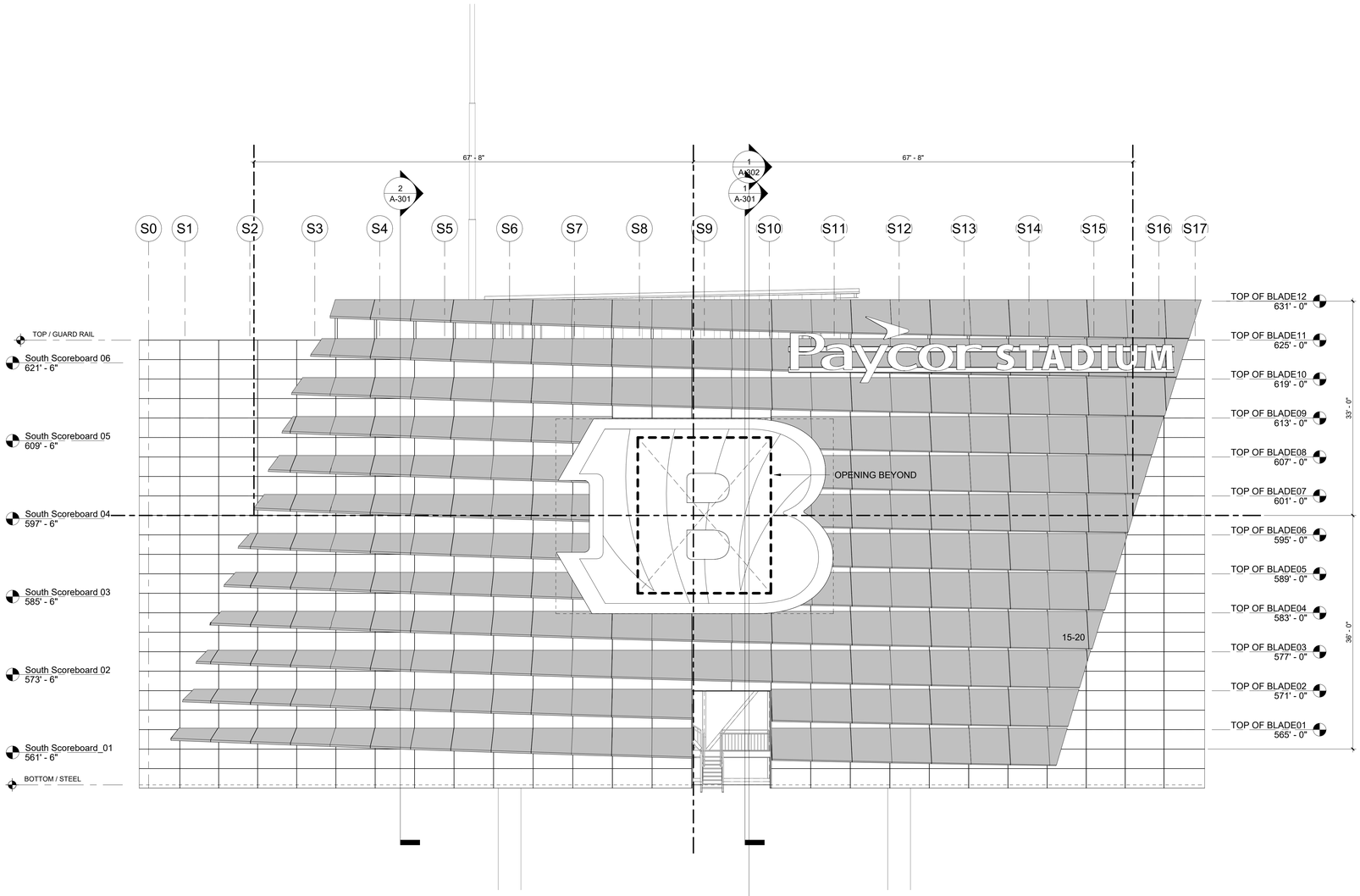

1
A-201.3
SOUTH SCOREBOARD ELEVATION - SIGNAGE
1/8" = 1'-0"

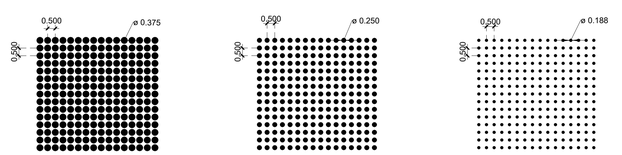

STRIPE PATTERN A
40% OPEN AREA

0.375-INCH DIAMETER ROUND
0.50 INCH CENTERS

STRIPE PATTERN B
18% OPEN AREA

0.250-INCH DIAMETER ROUND
0.50 INCH CENTERS

BLADE PATTERN
10% OPEN AREA

0.1875-INCH DIAMETER ROUND
0.50 INCH CENTERS

PERFORATION PATTERNS

GENERAL NOTES

1. REVIEW OF THE DELEGATED DESIGN SUBMITTALS BY THE ARCHITECT AND ENGINEER OF RECORD IS SOLELY FOR RECOGNITION OF GENERAL CONFORMANCE WITH THE DESIGN INTENT. DELEGATED DESIGNER RETAINS SOLE LIABILITY AND RESPONSIBILITY FOR SYSTEM PERFORMANCE, FIELD DIMENSIONS, FABRICATION TECHNIQUES, AND SAFE INSTALLATION.
2. THE DESIGN OF PERFORATED PANEL SYSTEM IS A DELEGATED DESIGN. THE DELEGATED DESIGN CONTRACTOR IS RESPONSIBLE FOR THE FINAL DETAILED ENGINEERING AND DESIGN. ALL SHOP DRAWINGS AND STRUCTURAL CALCULATIONS MUST BE PREPARED AND SEALED BY A PROFESSIONAL ENGINEER LICENSED IN THE STATE OF OHIO. DELEGATED DESIGN SHALL COMPLY WITH ALL PERFORMANCE CRITERIA AND SPECIFICATIONS.
3. THE DELEGATED DESIGN ENGINEER OF RECORD SHALL COORDINATE WITH THE ARCHITECT OF RECORD TO ENSURE AESTHETIC AND CLEARANCE REQUIREMENTS ARE MET. THE REVIEW OF SUBMITTALS BY THE ARCHITECT/ENGINEER OF RECORD IS FOR GENERAL CONFORMANCE WITH DESIGN INTENT ONLY AND DOES NOT RELIEVE THE DELEGATED DESIGNER OF FULL DESIGN RESPONSIBILITY.
4. DO NOT SCALE DRAWINGS FOR EXACT DIMENSIONS. THE DELEGATED DESIGNER IS RESPONSIBLE FOR FIELD VERIFYING ALL DIMENSIONS AND CONDITIONS PRIOR TO FINALIZING THE SHOP DRAWINGS AND FABRICATION.
5. THE DELEGATED DESIGN SYSTEM(S) INDICATED IN THE CONTRACT DOCUMENTS SHALL BE DESIGNED TO RESIST ALL DEAD, LIVE, WIND, SEISMIC, AND THERMAL LOADS IN STRICT ACCORDANCE WITH THE PREVAILING OHIO BUILDING CODE, AND ALL LOCAL AMENDMENTS. THE SPECIFIED SYSTEM PERFORMANCE CRITERIA SHALL TAKE PRECEDENCE OVER GENERAL DETAILS IN THE EVENT OF A CONFLICT.
6. THE DELEGATED DESIGNER SHALL SUBMIT COMPLETE SHOP DRAWINGS, PRODUCT DATA, AND STRUCTURAL CALCULATIONS FOR ALL DELEGATED DESIGN ITEMS. ALL SUBMITTALS MUST BEAR THE SIGNATURE AND DEPOSITED SEAL OF A REGISTERED PROFESSIONAL ENGINEER LICENSED IN THE STATE OF OHIO. INDEPENDENT STRUCTURAL CALCULATIONS MUST BE REPRODUCIBLE AND CLEARLY STATE ALL DESIGN ASSUMPTIONS, LOAD COMBINATIONS, AND MATERIAL STRENGTHS.
7. THE DELEGATED DESIGN ENGINEER SHALL EXPEDITIOUSLY COORDINATE ATTACHMENT POINTS, EMBEDS, AND CLEARANCES WITH ALL ADJACENT TRADES.

NO.	DATE	DESCRIPTION
1.0	10-13-2026	ISSUE FOR BID

Hamilton County OHIO

SOUTH SCOREBOARD FACADE
1 Paycor Stadium Cincinnati, OH 45202

KZF DESIGN
Designing Better Futures

KZF DESIGN INC.
700 Broadway Street
Cincinnati, OH 45202

main 513.621.6211
kzf.com

DESIGNED	COMM. NO.
B. RAYMOND	8445.10
DRAWN	DATE
M. ALBERS	10-13-2026
CHECKED	PROJ. MGR.
J. THAMANN	C. MAI

SOUTH SCOREBOARD FACADE ELEVATIONS

DRAWING NUMBER ISSUE
A-201.3 1.0

GENERAL NOTES

1. REVIEW OF THE DELEGATED DESIGN SUBMITTALS BY THE ARCHITECT AND ENGINEER OF RECORD IS SOLELY FOR RECOGNITION OF GENERAL CONFORMANCE WITH THE DESIGN INTENT. DELEGATED DESIGNER RETAINS SOLE LIABILITY AND RESPONSIBILITY FOR SYSTEM PERFORMANCE, FIELD DIMENSIONS, FABRICATION TECHNIQUES, AND SAFE INSTALLATION.
2. THE DESIGN OF PERFORATED PANEL SYSTEM IS A DELEGATED DESIGN. THE DELEGATED DESIGN CONTRACTOR IS RESPONSIBLE FOR THE FINAL DETAILED ENGINEERING AND DESIGN. ALL SHOP DRAWINGS AND STRUCTURAL CALCULATIONS MUST BE PREPARED AND SEALED BY A PROFESSIONAL ENGINEER LICENSED IN THE STATE OF OHIO. DELEGATED DESIGN SHALL COMPLY WITH ALL PERFORMANCE CRITERIA AND SPECIFICATIONS.
3. THE DELEGATED DESIGN ENGINEER OF RECORD SHALL COORDINATE WITH THE ARCHITECT OF RECORD TO ENSURE AESTHETIC AND CLEARANCE REQUIREMENTS ARE MET. THE REVIEW OF SUBMITTALS BY THE ARCHITECT/ENGINEER OF RECORD IS FOR GENERAL CONFORMANCE WITH DESIGN INTENT ONLY AND DOES NOT RELIEVE THE DELEGATED DESIGNER OF FULL DESIGN RESPONSIBILITY.
4. DO NOT SCALE DRAWINGS FOR EXACT DIMENSIONS. THE DELEGATED DESIGNER IS RESPONSIBLE FOR FIELD VERIFYING ALL DIMENSIONS AND CONDITIONS PRIOR TO FINALIZING THE SHOP DRAWINGS AND FABRICATION.
5. THE DELEGATED DESIGN SYSTEM(S) INDICATED IN THE CONTRACT DOCUMENTS SHALL BE DESIGNED TO RESIST ALL DEAD, LIVE, WIND, SEISMIC, AND THERMAL LOADS IN STRICT ACCORDANCE WITH THE PREVAILING OHIO BUILDING CODE, AND ALL LOCAL AMENDMENTS. THE SPECIFIED SYSTEM PERFORMANCE CRITERIA SHALL TAKE PRECEDENCE OVER GENERAL DETAILS IN THE EVENT OF A CONFLICT.
6. THE DELEGATED DESIGNER SHALL SUBMIT COMPLETE SHOP DRAWINGS, PRODUCT DATA, AND STRUCTURAL CALCULATIONS FOR ALL DELEGATED DESIGN ITEMS. ALL SUBMITTALS MUST BEAR THE SIGNATURE AND DEPOSITED SEAL OF A REGISTERED PROFESSIONAL ENGINEER LICENSED IN THE STATE OF OHIO. INDEPENDENT STRUCTURAL CALCULATIONS MUST BE REPRODUCIBLE AND CLEARLY STATE ALL DESIGN ASSUMPTIONS, LOAD COMBINATIONS, AND MATERIAL STRENGTHS.
7. THE DELEGATED DESIGN ENGINEER SHALL EXPEDITIOUSLY COORDINATE ATTACHMENT POINTS, EMBEDS, AND CLEARANCES WITH ALL ADJACENT TRADES.

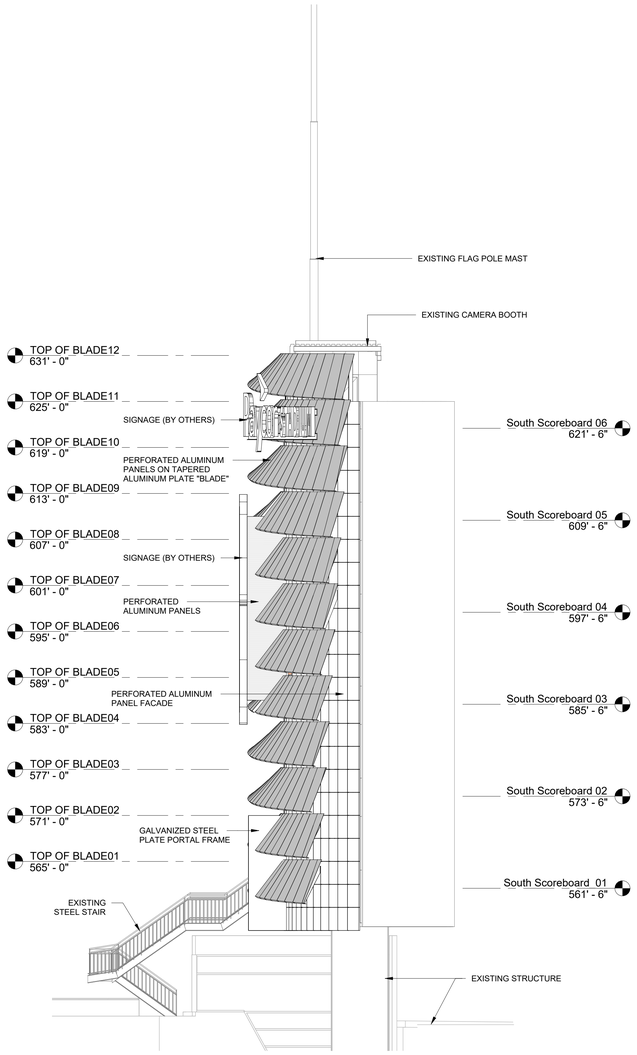

2 A-201.4 **EAST ELEVATION**
1/8" = 1'-0"

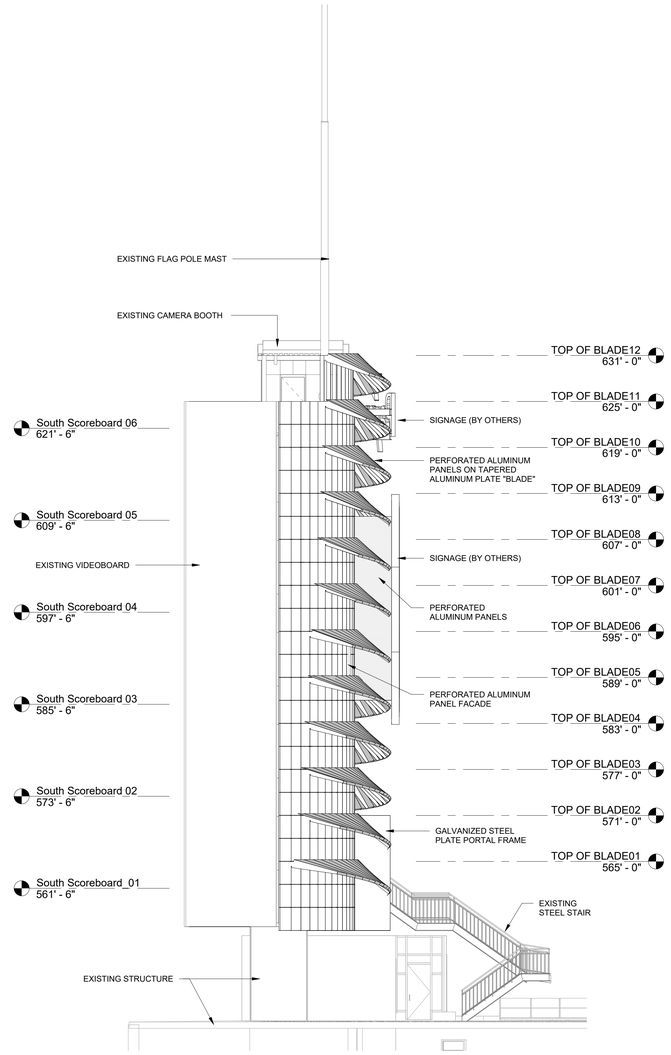

3 A-201.4 **WEST ELEVATION**
1/8" = 1'-0"

0 4' 8' 16'
SCALE: 1/8"=1'-0"

NO.	DATE	DESCRIPTION
1.0	10-13-2026	ISSUE FOR BID

Hamilton County OHIO

SOUTH SCOREBOARD FACADE
1 Paycor Stadium Cincinnati, OH 45202

KZF DESIGN
Designing Better Futures

KZF DESIGN INC.
700 Broadway Street
Cincinnati, OH 45202

main 513.621.6211
kzf.com

DESIGNED	COMM. NO.
B. RAYMOND	8445.10
DRAWN	DATE
M. ALBERS	10-13-2026
CHECKED	PROJ. MGR.
J. THAMANN	C. MAI

SOUTH SCOREBOARD FACADE ELEVATIONS

DRAWING NUMBER ISSUE
A-201.4 1.0

SOUTH SCOREBOARD FACADE

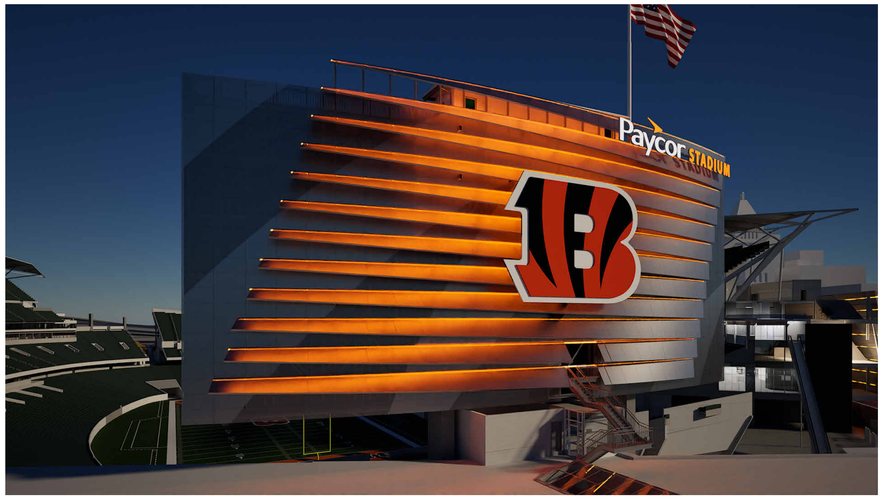

SOUTH SCOREBOARD FACE LIGHTING CONCEPT

SOUTH SCOREBOARD FACADE

NO.	DATE	DESCRIPTION
1.0	10-13-2026	ISSUE FOR BID

Hamilton County OHIO

SOUTH SCOREBOARD FACADE
1 Paycor Stadium Cincinnati, OH 45202

KZF DESIGN
Designing Better Futures

KZF DESIGN INC.
700 Broadway Street
Cincinnati, OH 45202

main 513.621.6211
kzf.com

DESIGNED	COMM. NO.
B. RAYMOND	8445.10
DRAWN	DATE
M. ALBERS	10-13-2026
CHECKED	PROJ. MGR.
J. THAMANN	C. MAI

SOUTH SCOREBOARD FACADE RENDERINGS

DRAWING NUMBER	ISSUE
A-202	1.0

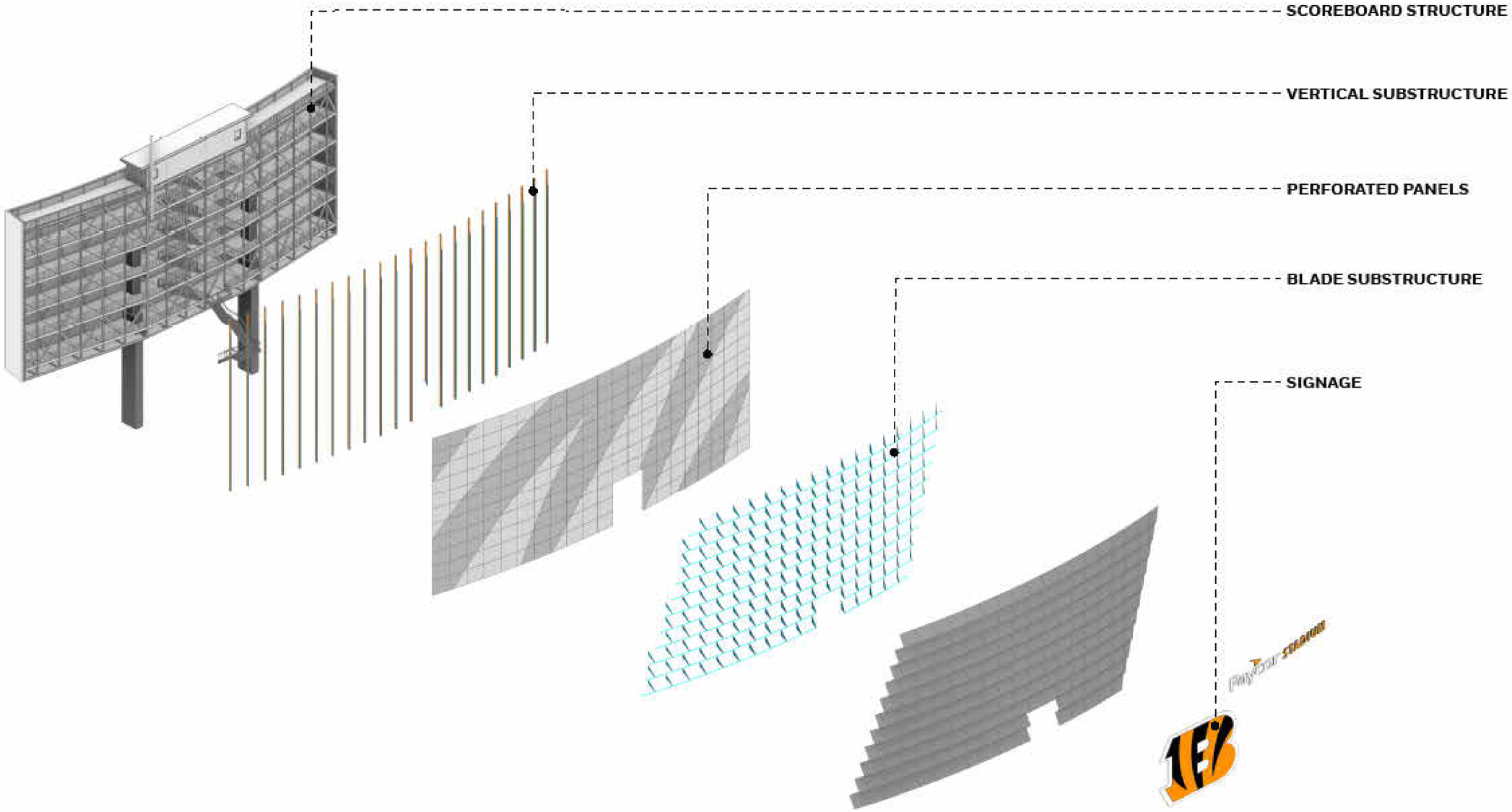

FACADE COMPONENTS

NO.	DATE	DESCRIPTION
1.0	10-13-2026	ISSUE FOR BID

Hamilton County OHIO

SOUTH SCOREBOARD FACADE
1 Paycor Stadium Cincinnati, OH 45202

KZF DESIGN
Designing Better Futures

KZF DESIGN INC.
700 Broadway Street
Cincinnati, OH 45202

main 513.621.6211
kzf.com

DESIGNED	COMM. NO.
B. RAYMOND	8445.10
DRAWN	DATE
M. ALBERS	10-13-2026
CHECKED	PROJ. MGR.
J. THAMANN	C. MAI

SOUTH SCOREBOARD FACADE ASSEMBLY DIAGRAM

DRAWING NUMBER	ISSUE
A-300	1.0

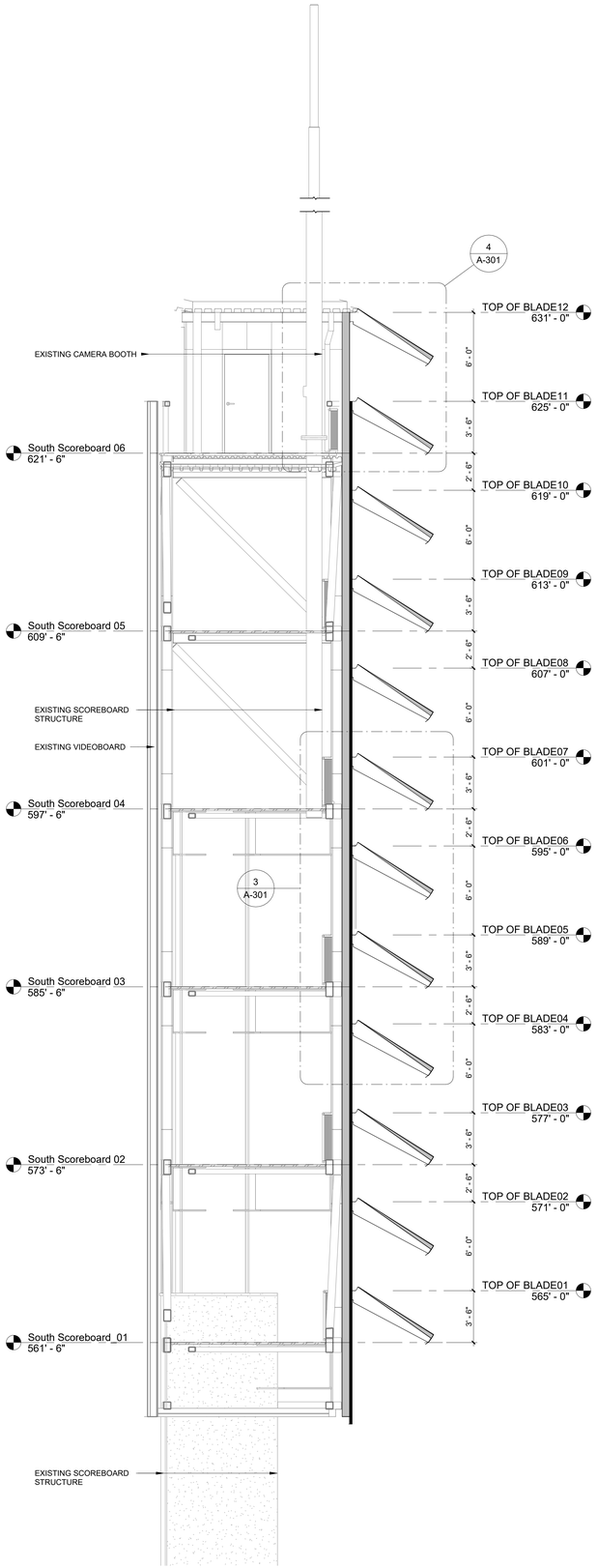

2 A-301 **SOUTH SCOREBOARD SECTION**
1/4" = 1'-0"

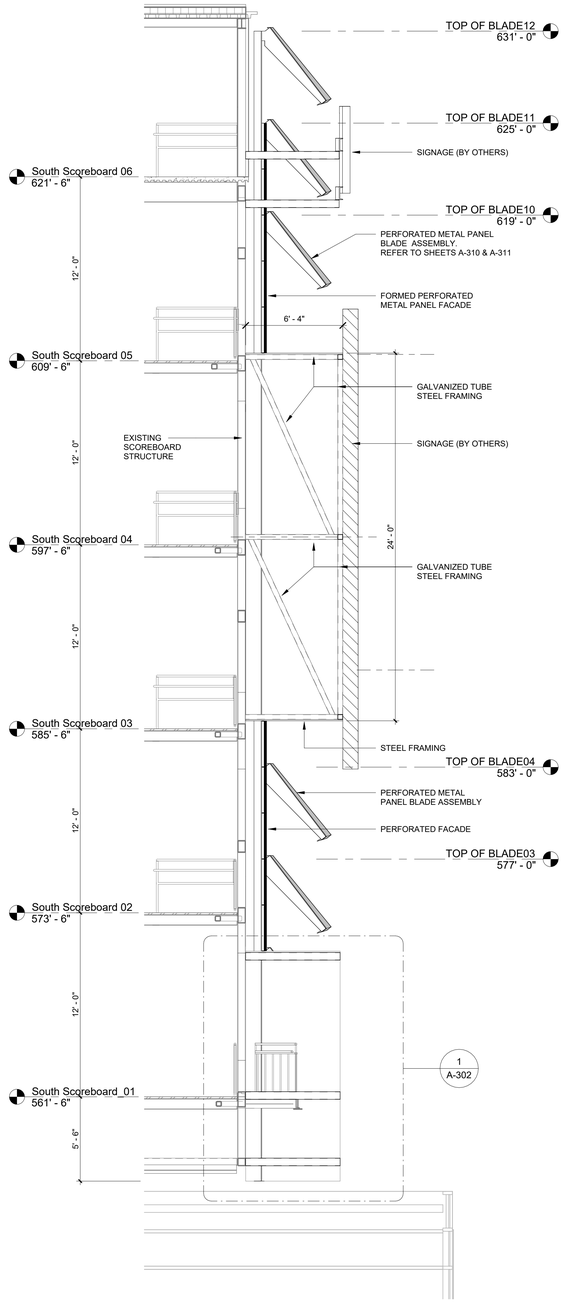

1 A-301 **SOUTH SCOREBOARD SECTION**
1/4" = 1'-0"

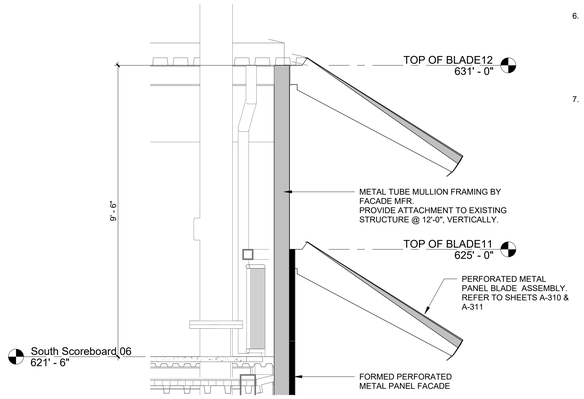

4 A-301 **SECTION DETAIL**
1/2" = 1'-0"

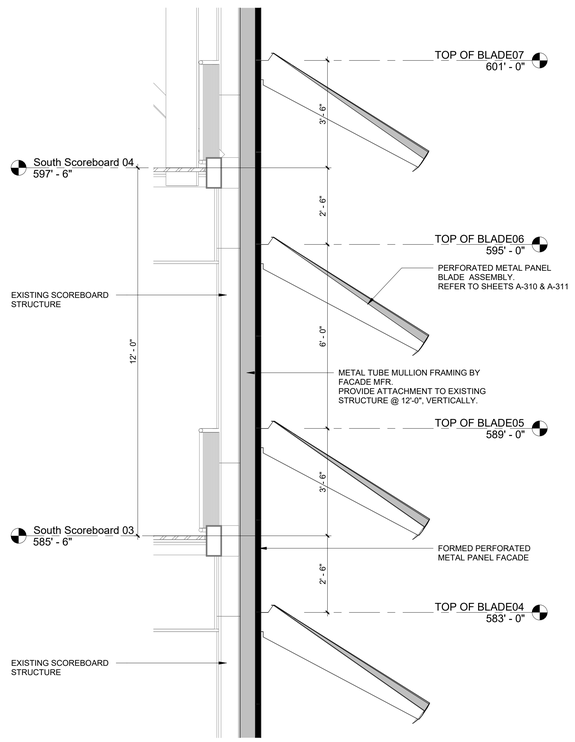

3 A-301 **SECTION DETAIL**
1/2" = 1'-0"

GENERAL NOTES

1. REVIEW OF THE DELEGATED DESIGN SUBMITTALS BY THE ARCHITECT AND ENGINEER OF RECORD IS SOLELY FOR RECOGNITION OF GENERAL CONFORMANCE WITH THE DESIGN INTENT. DELEGATED DESIGNER RETAINS SOLE LIABILITY AND RESPONSIBILITY FOR SYSTEM PERFORMANCE, FIELD DIMENSIONS, FABRICATION TECHNIQUES, AND SAFE INSTALLATION.
2. THE DESIGN OF PERFORATED PANEL SYSTEM IS A DELEGATED DESIGN. THE DELEGATED DESIGN CONTRACTOR IS RESPONSIBLE FOR THE FINAL DETAILED ENGINEERING AND DESIGN. ALL SHOP DRAWINGS AND STRUCTURAL CALCULATIONS MUST BE PREPARED AND SEALED BY A PROFESSIONAL ENGINEER LICENSED IN THE STATE OF OHIO. DELEGATED DESIGN SHALL COMPLY WITH ALL PERFORMANCE CRITERIA AND SPECIFICATIONS.
3. THE DELEGATED DESIGN ENGINEER OF RECORD SHALL COORDINATE WITH THE ARCHITECT OF RECORD TO ENSURE AESTHETIC AND CLEARANCE REQUIREMENTS ARE MET. THE REVIEW OF SUBMITTALS BY THE ARCHITECT/ENGINEER OF RECORD IS FOR GENERAL CONFORMANCE WITH DESIGN INTENT ONLY AND DOES NOT RELIEVE THE DELEGATED DESIGNER OF FULL DESIGN RESPONSIBILITY.
4. DO NOT SCALE DRAWINGS FOR EXACT DIMENSIONS. THE DELEGATED DESIGNER IS RESPONSIBLE FOR FIELD VERIFYING ALL DIMENSIONS AND CONDITIONS PRIOR TO FINALIZING THE SHOP DRAWINGS AND FABRICATION.
5. THE DELEGATED DESIGN SYSTEM(S) INDICATED IN THE CONTRACT DOCUMENTS SHALL BE DESIGNED TO RESIST ALL DEAD, LIVE, WIND, SEISMIC, AND THERMAL LOADS IN STRICT ACCORDANCE WITH THE PREVAILING OHIO BUILDING CODE, AND ALL LOCAL AMENDMENTS. THE SPECIFIED SYSTEM PERFORMANCE CRITERIA SHALL TAKE PRECEDENCE OVER GENERAL DETAILS IN THE EVENT OF A CONFLICT.
6. THE DELEGATED DESIGNER SHALL SUBMIT COMPLETE SHOP DRAWINGS, PRODUCT DATA, AND STRUCTURAL CALCULATIONS FOR ALL DELEGATED DESIGN ITEMS. ALL SUBMITTALS MUST BEAR THE SIGNATURE AND DEPOSITED SEAL OF A REGISTERED PROFESSIONAL ENGINEER LICENSED IN THE STATE OF OHIO. INDEPENDENT STRUCTURAL CALCULATIONS MUST BE REPRODUCIBLE AND CLEARLY STATE ALL DESIGN ASSUMPTIONS, LOAD COMBINATIONS, AND MATERIAL STRENGTHS.
7. THE DELEGATED DESIGN ENGINEER SHALL EXPEDITIOUSLY COORDINATE ATTACHMENT POINTS, EMBEDS, AND CLEARANCES WITH ALL ADJACENT TRADES.

NO.	DATE	DESCRIPTION
1.0	10-13-2026	ISSUE FOR BID

Hamilton County OHIO

SOUTH SCOREBOARD FACADE
1 Paycor Stadium Cincinnati, OH 45202

KZF DESIGN
Designing Better Futures

KZF DESIGN INC.
700 Broadway Street
Cincinnati, OH 45202

main 513.621.6211
kzf.com

DESIGNED	COMM. NO.
B. RAYMOND	8445.10
DRAWN	DATE
M. ALBERS	10-13-2026
CHECKED	PROJ. MGR.
J. THAMANN	C. MAI

SOUTH SCOREBOARD SECTION

DRAWING NUMBER ISSUE
A-301 1.0

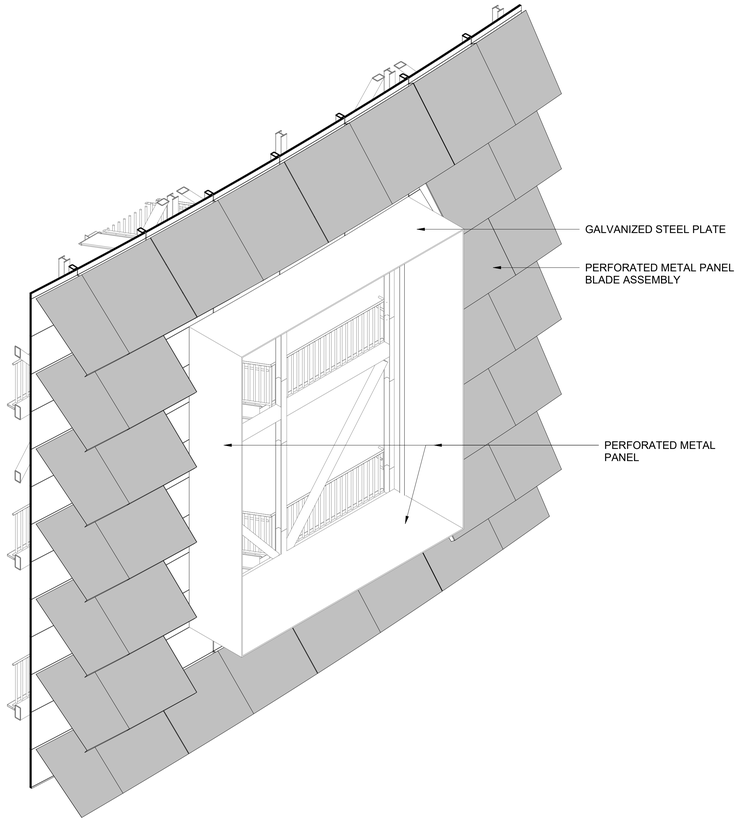

4 A-302 **LOGO SIGNAGE SUPPORT FRAME PERSPECTIVE**

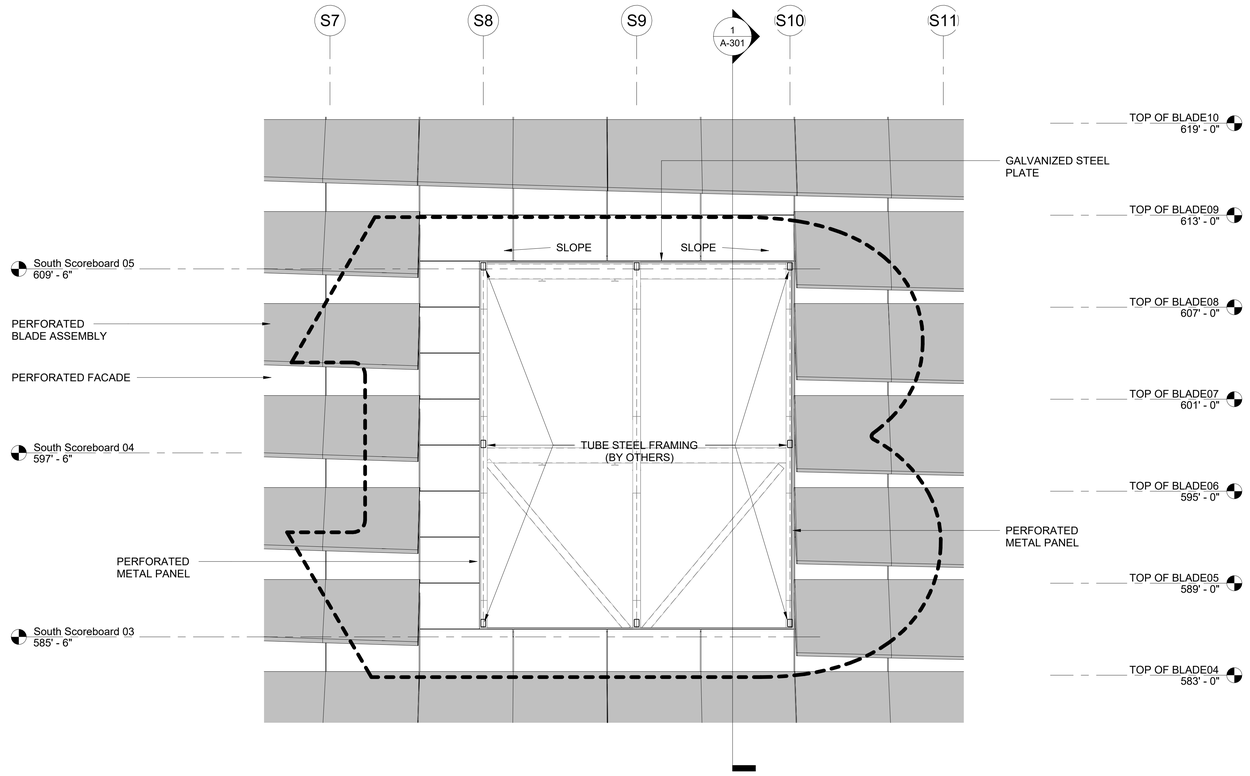

3 A-302 **LOGO SIGNAGE FRAME**
1/4" = 1'-0"

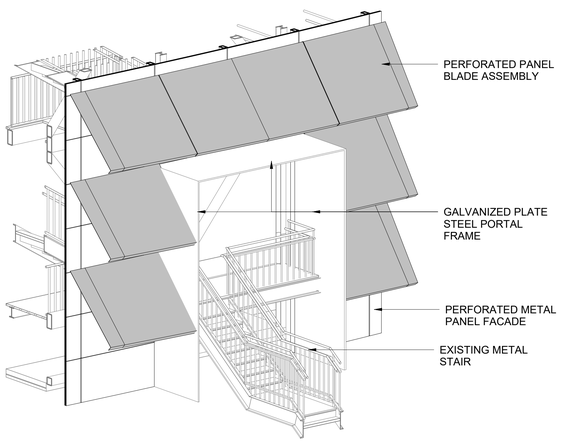

5 A-302 **STAIR PORTAL FRAME PERSPECTIVE**

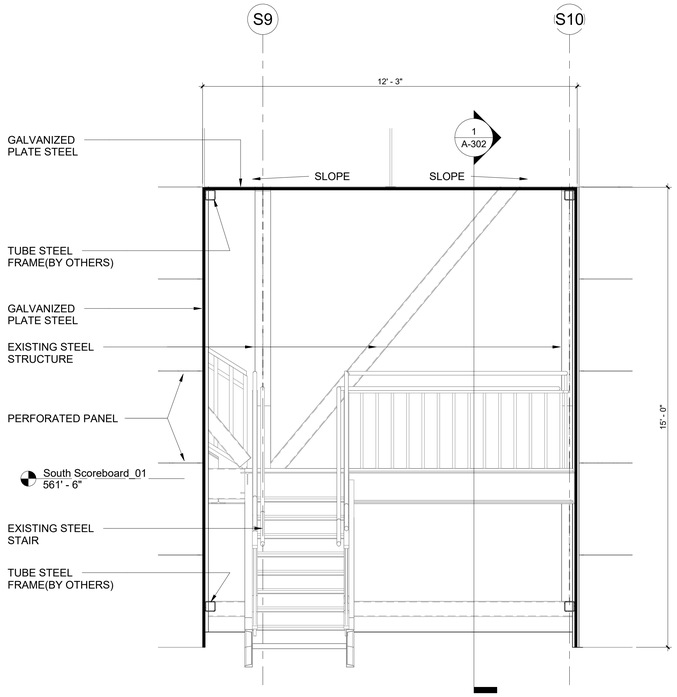

2 A-302 **STAIR PORTAL ELEVATION**
1/2" = 1'-0"

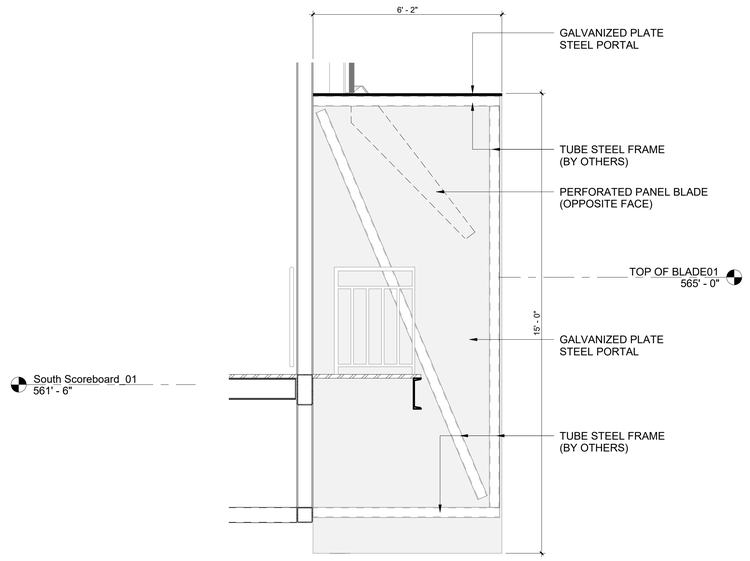

1 A-302 **STAIR PORTAL SECTION**
1/2" = 1'-0"

NO.	DATE	DESCRIPTION
1.0	10-13-2026	ISSUE FOR BID

Hamilton County OHIO

SOUTH SCOREBOARD FACADE
1 Paycor Stadium Cincinnati, OH 45202

KZF DESIGN
Designing Better Futures

KZF DESIGN INC.
700 Broadway Street
Cincinnati, OH 45202

main 513.621.6211
kzf.com

DESIGNED	COMM. NO.
B. RAYMOND	8445.10
DRAWN	DATE
M. ALBERS	10-13-2026
CHECKED	PROJ. MGR.
J. THAMANN	C. MAI

SOUTH SCOREBOARD FACADE DETAILS

DRAWING NUMBER ISSUE
A-302 1.0

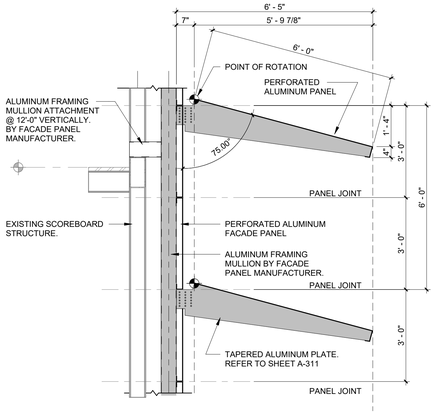

14 A-310 **BLADE ASSEMBLY 75**
1/2" = 1'-0"

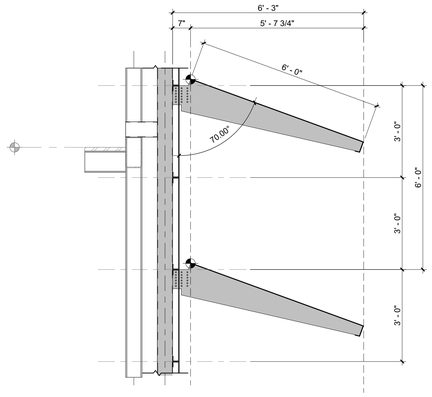

13 A-310 **BLADE ASSEMBLY 70**
1/2" = 1'-0"

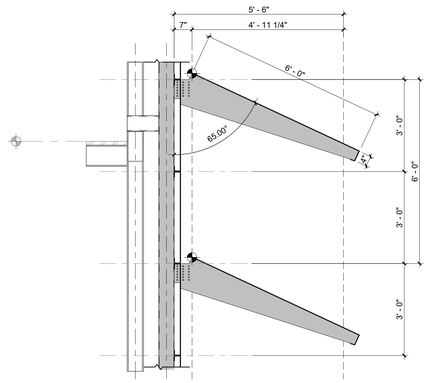

12 A-310 **BLADE ASSEMBLY 65**
1/2" = 1'-0"

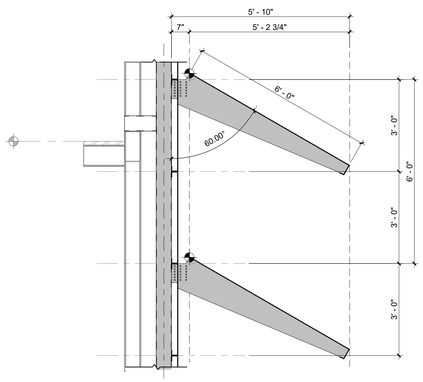

11 A-310 **BLADE ASSEMBLY 60**
1/2" = 1'-0"

GENERAL NOTES

1. REVIEW OF THE DELEGATED DESIGN SUBMITTALS BY THE ARCHITECT AND ENGINEER OF RECORD IS SOLELY FOR RECOGNITION OF GENERAL CONFORMANCE WITH THE DESIGN INTENT. DELEGATED DESIGNER RETAINS SOLE LIABILITY AND RESPONSIBILITY FOR SYSTEM PERFORMANCE, FIELD DIMENSIONS, FABRICATION TECHNIQUES, AND SAFE INSTALLATION.
2. THE DESIGN OF PERFORATED PANEL SYSTEM IS A DELEGATED DESIGN. THE DELEGATED DESIGN CONTRACTOR IS RESPONSIBLE FOR THE FINAL DETAILED ENGINEERING AND DESIGN. ALL SHOP DRAWINGS AND STRUCTURAL CALCULATIONS MUST BE PREPARED AND SEALED BY A PROFESSIONAL ENGINEER LICENSED IN THE STATE OF OHIO. DELEGATED DESIGN SHALL COMPLY WITH ALL PERFORMANCE CRITERIA AND SPECIFICATIONS.
3. THE DELEGATED DESIGN ENGINEER OF RECORD SHALL COORDINATE WITH THE ARCHITECT OF RECORD TO ENSURE AESTHETIC AND CLEARANCE REQUIREMENTS ARE MET. THE REVIEW OF SUBMITTALS BY THE ARCHITECT/ENGINEER OF RECORD IS FOR GENERAL CONFORMANCE WITH DESIGN INTENT ONLY AND DOES NOT RELIEVE THE DELEGATED DESIGNER OF FULL DESIGN RESPONSIBILITY.
4. DO NOT SCALE DRAWINGS FOR EXACT DIMENSIONS. THE DELEGATED DESIGNER IS RESPONSIBLE FOR FIELD VERIFYING ALL DIMENSIONS AND CONDITIONS PRIOR TO FINALIZING THE SHOP DRAWINGS AND FABRICATION.
5. THE DELEGATED DESIGN SYSTEM(S) INDICATED IN THE CONTRACT DOCUMENTS SHALL BE DESIGNED TO RESIST ALL DEAD, LIVE, WIND, SEISMIC, AND THERMAL LOADS IN STRICT ACCORDANCE WITH THE PREVAILING OHIO BUILDING CODE, AND ALL LOCAL AMENDMENTS. THE SPECIFIED SYSTEM PERFORMANCE CRITERIA SHALL TAKE PRECEDENCE OVER GENERAL DETAILS IN THE EVENT OF A CONFLICT.
6. THE DELEGATED DESIGNER SHALL SUBMIT COMPLETE SHOP DRAWINGS, PRODUCT DATA, AND STRUCTURAL CALCULATIONS FOR ALL DELEGATED DESIGN ITEMS. ALL SUBMITTALS MUST BEAR THE SIGNATURE AND DEPOSITED SEAL OF A REGISTERED PROFESSIONAL ENGINEER LICENSED IN THE STATE OF OHIO. INDEPENDENT STRUCTURAL CALCULATIONS MUST BE REPRODUCIBLE AND CLEARLY STATE ALL DESIGN ASSUMPTIONS, LOAD COMBINATIONS, AND MATERIAL STRENGTHS.
7. THE DELEGATED DESIGN ENGINEER SHALL EXPEDITIOUSLY COORDINATE ATTACHMENT POINTS, EMBEDS, AND CLEARANCES WITH ALL ADJACENT TRADES.

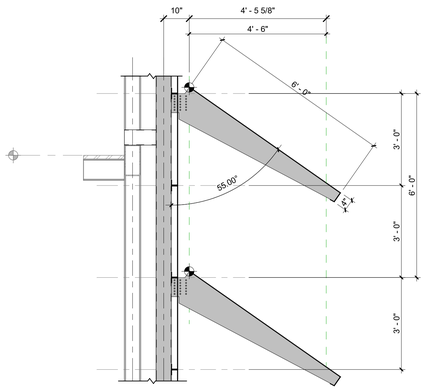

10 A-310 **BLADE ASSEMBLY 55**
1/2" = 1'-0"

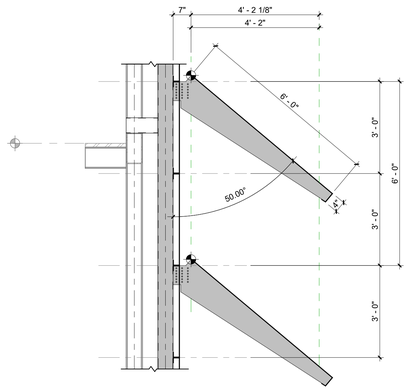

09 A-310 **BLADE ASSEMBLY 50**
1/2" = 1'-0"

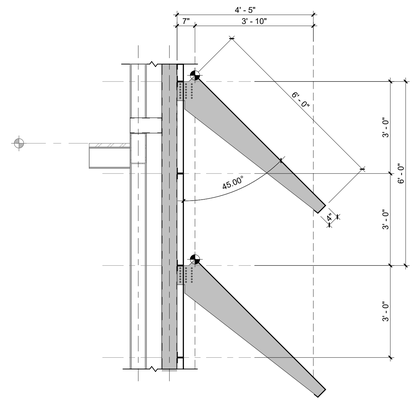

08 A-310 **BLADE ASSEMBLY 45**
1/2" = 1'-0"

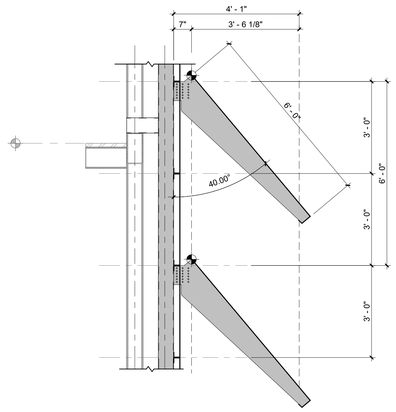

07 A-310 **BLADE ASSEMBLY 40**
1/2" = 1'-0"

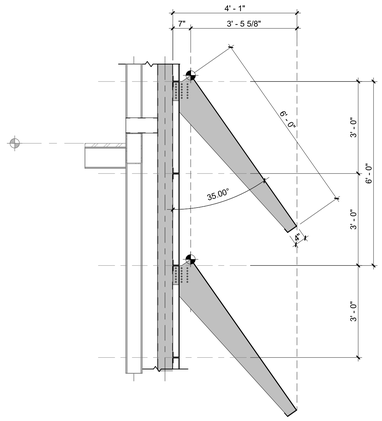

06 A-310 **BLADE ASSEMBLY 35**
1/2" = 1'-0"

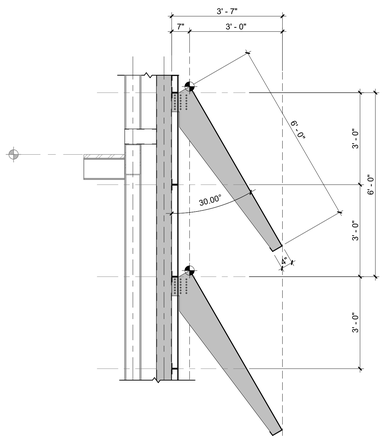

05 A-310 **BLADE ASSEMBLY 30**
1/2" = 1'-0"

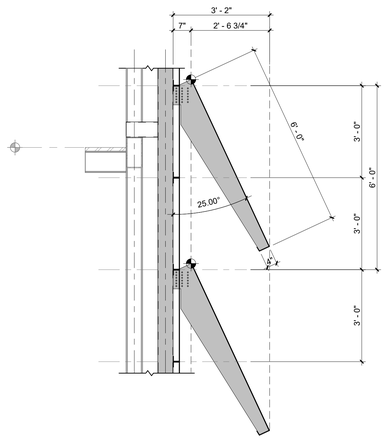

04 A-310 **BLADE ASSEMBLY 25**
1/2" = 1'-0"

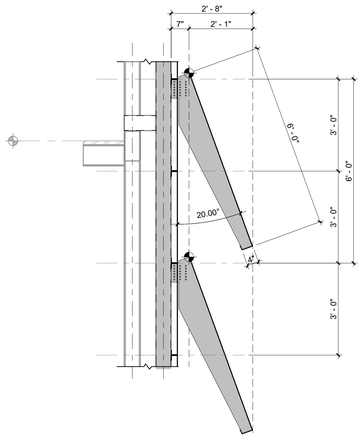

03 A-310 **BLADE ASSEMBLY 20**
1/2" = 1'-0"

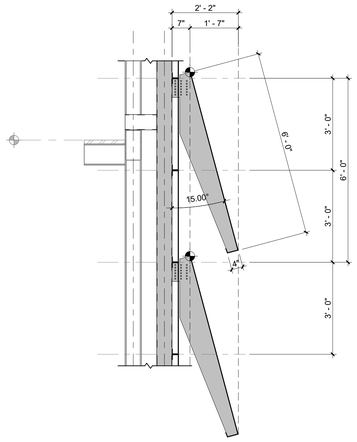

02 A-310 **BLADE ASSEMBLY 15**
1/2" = 1'-0"

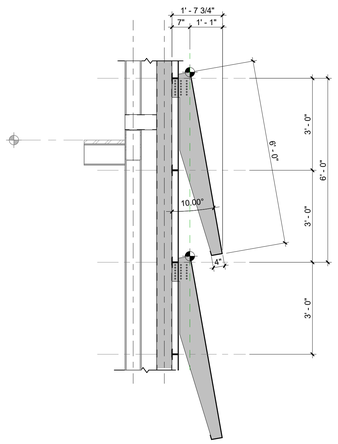

01 A-310 **BLADE ASSEMBLY 10**
1/2" = 1'-0"

0 1' 2' 4'
SCALE: 1/2"=1'-0"

NO.	DATE	DESCRIPTION
1.0	10-13-2026	ISSUE FOR BID

Hamilton County OHIO

SOUTH SCOREBOARD FACADE
1 Paycor Stadium Cincinnati, OH 45202

KZF DESIGN
Designing Better Futures

KZF DESIGN INC.
700 Broadway Street
Cincinnati, OH 45202

main 513.621.6211
kzf.com

DESIGNED	COMM. NO.
B. RAYMOND	8445.10
DRAWN	DATE
M. ALBERS	10-13-2026
CHECKED	PROJ. MGR.
J. THAMANN	C. MAI

BLADE ASSEMBLY DETAILS

DRAWING NUMBER ISSUE
A-310 1.0

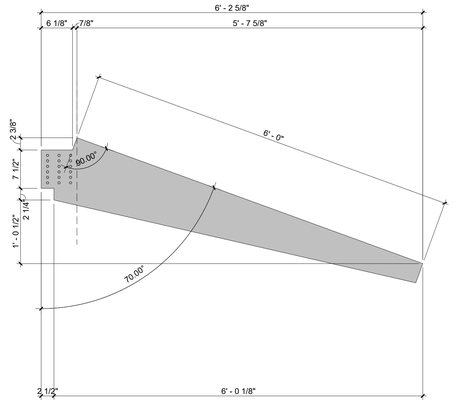

13 A-311 **TAPERED PLATE PROFILE**
1" = 1'-0"

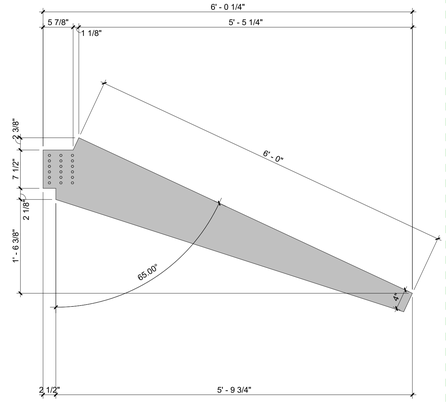

12 A-311 **TAPERED PLATE PROFILE**
1" = 1'-0"

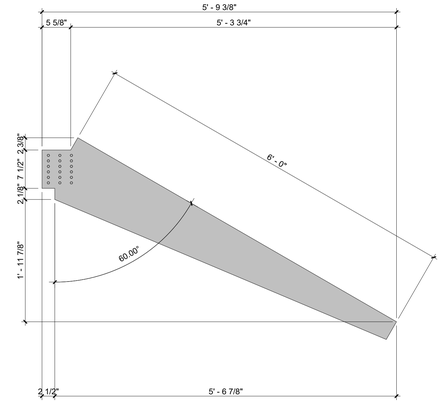

11 A-311 **TAPERED PLATE PROFILE**
1" = 1'-0"

GENERAL NOTES

1. REVIEW OF THE DELEGATED DESIGN SUBMITTALS BY THE ARCHITECT AND ENGINEER OF RECORD IS SOLELY FOR RECOGNITION OF GENERAL CONFORMANCE WITH THE DESIGN INTENT. DELEGATED DESIGNER RETAINS SOLE LIABILITY AND RESPONSIBILITY FOR SYSTEM PERFORMANCE, FIELD DIMENSIONS, FABRICATION TECHNIQUES, AND SAFE INSTALLATION.
2. THE DESIGN OF PERFORATED PANEL SYSTEM IS A DELEGATED DESIGN. THE DELEGATED DESIGN CONTRACTOR IS RESPONSIBLE FOR THE FINAL DETAILED ENGINEERING AND DESIGN. ALL SHOP DRAWINGS AND STRUCTURAL CALCULATIONS MUST BE PREPARED AND SEALED BY A PROFESSIONAL ENGINEER LICENSED IN THE STATE OF OHIO. DELEGATED DESIGN SHALL COMPLY WITH ALL PERFORMANCE CRITERIA AND SPECIFICATIONS.
3. THE DELEGATED DESIGN ENGINEER OF RECORD SHALL COORDINATE WITH THE ARCHITECT OF RECORD TO ENSURE AESTHETIC AND CLEARANCE REQUIREMENTS ARE MET. THE REVIEW OF SUBMITTALS BY THE ARCHITECT/ENGINEER OF RECORD IS FOR GENERAL CONFORMANCE WITH DESIGN INTENT ONLY AND DOES NOT RELIEVE THE DELEGATED DESIGNER OF FULL DESIGN RESPONSIBILITY.
4. DO NOT SCALE DRAWINGS FOR EXACT DIMENSIONS. THE DELEGATED DESIGNER IS RESPONSIBLE FOR FIELD VERIFYING ALL DIMENSIONS AND CONDITIONS PRIOR TO FINALIZING THE SHOP DRAWINGS AND FABRICATION.
5. THE DELEGATED DESIGN SYSTEM(S) INDICATED IN THE CONTRACT DOCUMENTS SHALL BE DESIGNED TO RESIST ALL DEAD, LIVE, WIND, SEISMIC, AND THERMAL LOADS IN STRICT ACCORDANCE WITH THE PREVAILING OHIO BUILDING CODE, AND ALL LOCAL AMENDMENTS. THE SPECIFIED SYSTEM PERFORMANCE CRITERIA SHALL TAKE PRECEDENCE OVER GENERAL DETAILS IN THE EVENT OF A CONFLICT.
6. THE DELEGATED DESIGNER SHALL SUBMIT COMPLETE SHOP DRAWINGS, PRODUCT DATA, AND STRUCTURAL CALCULATIONS FOR ALL DELEGATED DESIGN ITEMS. ALL SUBMITTALS MUST BEAR THE SIGNATURE AND DEPOSITED SEAL OF A REGISTERED PROFESSIONAL ENGINEER LICENSED IN THE STATE OF OHIO. INDEPENDENT STRUCTURAL CALCULATIONS MUST BE REPRODUCIBLE AND CLEARLY STATE ALL DESIGN ASSUMPTIONS, LOAD COMBINATIONS, AND MATERIAL STRENGTHS.
7. THE DELEGATED DESIGN ENGINEER SHALL EXPEDITIOUSLY COORDINATE ATTACHMENT POINTS, EMBEDS, AND CLEARANCES WITH ALL ADJACENT TRADES.

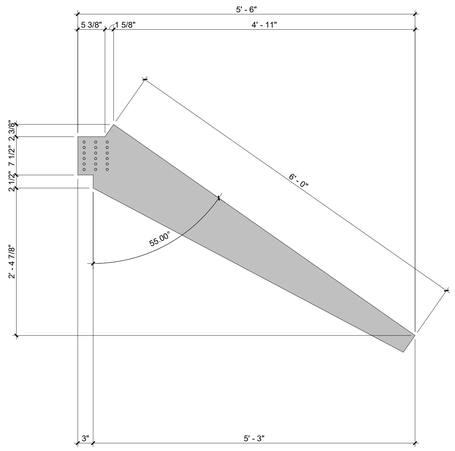

10 A-311 **TAPERED PLATE PROFILE**
1" = 1'-0"

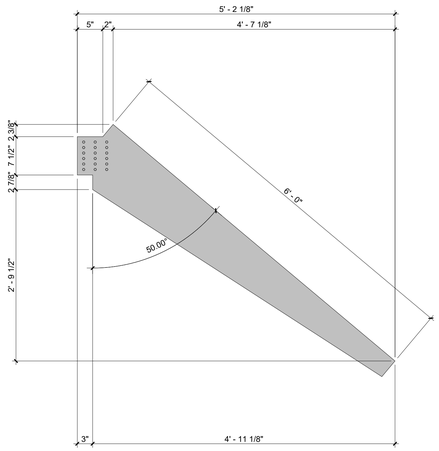

9 A-311 **TAPERED PLATE PROFILE**
1" = 1'-0"

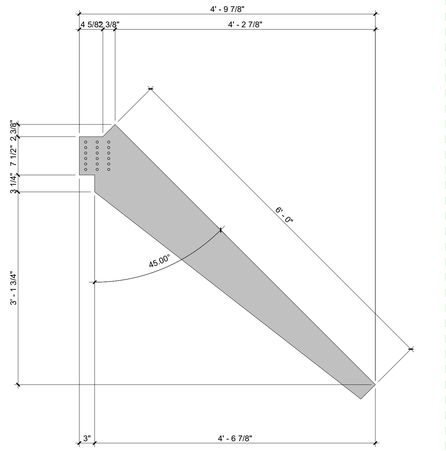

8 A-311 **TAPERED PLATE PROFILE**
1" = 1'-0"

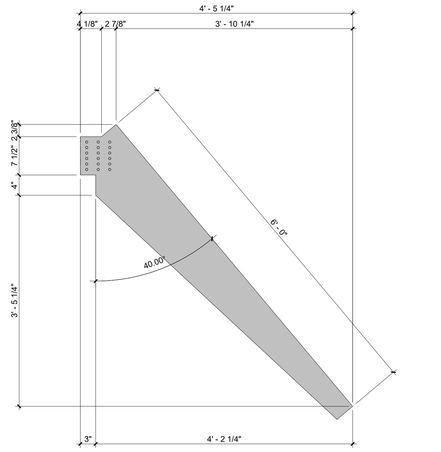

7 A-311 **TAPERED PLATE PROFILE**
1" = 1'-0"

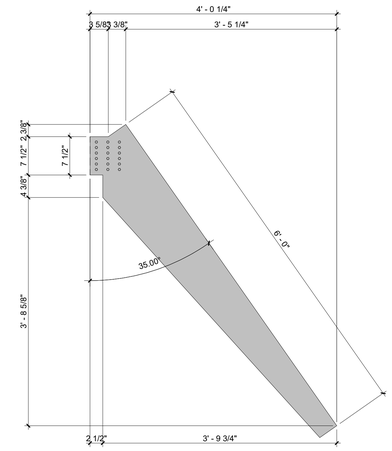

6 A-311 **TAPERED PLATE PROFILE**
1" = 1'-0"

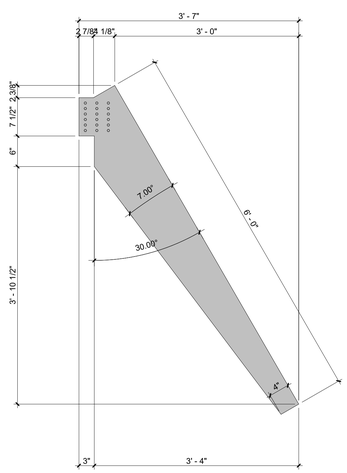

5 A-311 **TAPERED PLATE PROFILE**
1" = 1'-0"

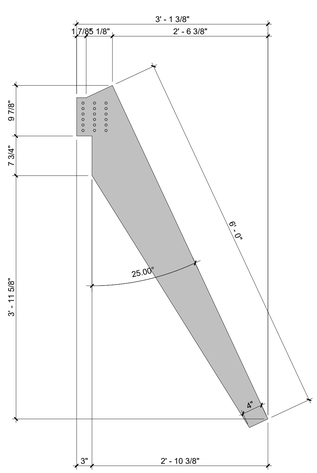

4 A-311 **TAPERED PLATE PROFILE**
1" = 1'-0"

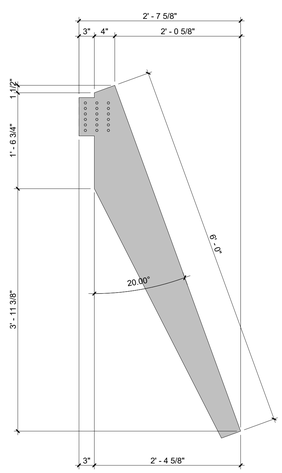

3 A-311 **TAPERED PLATE PROFILE**
1" = 1'-0"

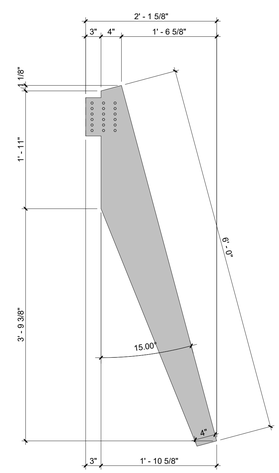

2 A-311 **TAPERED PLATE PROFILE**
1" = 1'-0"

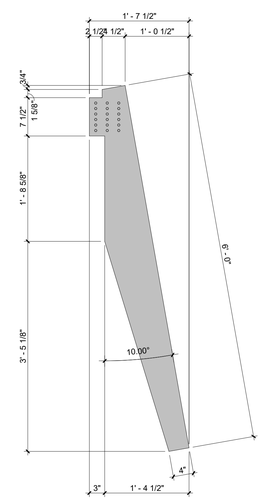

1 A-311 **TAPERED PLATE PROFILE**
1" = 1'-0"

0 1' 2'
SCALE: 1"=1'-0"

NO.	DATE	DESCRIPTION
1.0	10-13-2026	ISSUE FOR BID

Hamilton County OHIO

SOUTH SCOREBOARD FACADE
1 Paycor Stadium Cincinnati, OH 45202

KZF DESIGN
Designing Better Futures

KZF DESIGN INC.
700 Broadway Street
Cincinnati, OH 45202

main 513.621.6211
kzf.com

DESIGNED	COMM. NO.
B. RAYMOND	8445.10
DRAWN	DATE
M. ALBERS	10-13-2026
CHECKED	PROJ. MGR.
J. THAMANN	C. MAI

TAPERED BLADE PLATE PROFILES

DRAWING NUMBER ISSUE
A-311 1.0

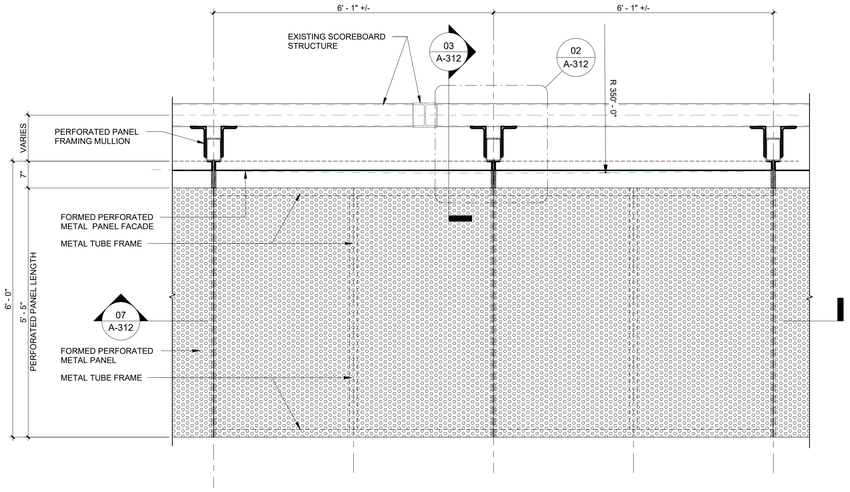

08 A-312 **TYPICAL PERFORATED PANEL BLADE - PLAN**
3/4" = 1'-0"

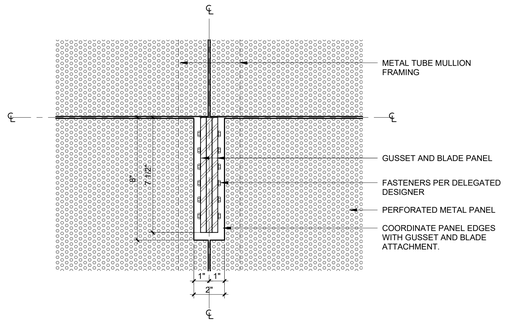

05 A-312 **SECTION DETAIL**
3" = 1'-0"

GENERAL NOTES

1. REVIEW OF THE DELEGATED DESIGN SUBMITTALS BY THE ARCHITECT AND ENGINEER OF RECORD IS SOLELY FOR RECOGNITION OF GENERAL CONFORMANCE WITH THE DESIGN INTENT. DELEGATED DESIGNER RETAINS SOLE LIABILITY AND RESPONSIBILITY FOR SYSTEM PERFORMANCE, FIELD DIMENSIONS, FABRICATION TECHNIQUES, AND SAFE INSTALLATION.
2. THE DESIGN OF PERFORATED PANEL SYSTEM IS A DELEGATED DESIGN. THE DELEGATED DESIGN CONTRACTOR IS RESPONSIBLE FOR THE FINAL DETAILED ENGINEERING AND DESIGN. ALL SHOP DRAWINGS AND STRUCTURAL CALCULATIONS MUST BE PREPARED AND SEALED BY A PROFESSIONAL ENGINEER LICENSED IN THE STATE OF OHIO. DELEGATED DESIGN SHALL COMPLY WITH ALL PERFORMANCE CRITERIA AND SPECIFICATIONS.
3. THE DELEGATED DESIGN ENGINEER OF RECORD SHALL COORDINATE WITH THE ARCHITECT OF RECORD TO ENSURE AESTHETIC AND CLEARANCE REQUIREMENTS ARE MET. THE REVIEW OF SUBMITTALS BY THE ARCHITECT/ENGINEER OF RECORD IS FOR GENERAL CONFORMANCE WITH DESIGN INTENT ONLY AND DOES NOT RELIEVE THE DELEGATED DESIGNER OF FULL DESIGN RESPONSIBILITY.
4. DO NOT SCALE DRAWINGS FOR EXACT DIMENSIONS. THE DELEGATED DESIGNER IS RESPONSIBLE FOR FIELD VERIFYING ALL DIMENSIONS AND CONDITIONS PRIOR TO FINALIZING THE SHOP DRAWINGS AND FABRICATION.
5. THE DELEGATED DESIGN SYSTEM(S) INDICATED IN THE CONTRACT DOCUMENTS SHALL BE DESIGNED TO RESIST ALL DEAD, LIVE, WIND, SEISMIC, AND THERMAL LOADS IN STRICT ACCORDANCE WITH THE PREVAILING OHIO BUILDING CODE, AND ALL LOCAL AMENDMENTS. THE SPECIFIED SYSTEM PERFORMANCE CRITERIA SHALL TAKE PRECEDENCE OVER GENERAL DETAILS IN THE EVENT OF A CONFLICT.
6. THE DELEGATED DESIGNER SHALL SUBMIT COMPLETE SHOP DRAWINGS, PRODUCT DATA, AND STRUCTURAL CALCULATIONS FOR ALL DELEGATED DESIGN ITEMS. ALL SUBMITTALS MUST BEAR THE SIGNATURE AND DEPOSITED SEAL OF A REGISTERED PROFESSIONAL ENGINEER LICENSED IN THE STATE OF OHIO. INDEPENDENT STRUCTURAL CALCULATIONS MUST BE REPRODUCIBLE AND CLEARLY STATE ALL DESIGN ASSUMPTIONS, LOAD COMBINATIONS, AND MATERIAL STRENGTHS.
7. THE DELEGATED DESIGN ENGINEER SHALL EXPEDITIOUSLY COORDINATE ATTACHMENT POINTS, EMBEDS, AND CLEARANCES WITH ALL ADJACENT TRADES.

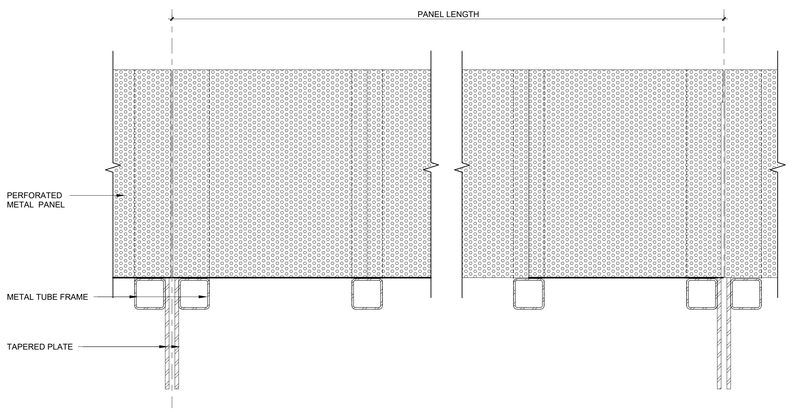

07 A-312 **BLADE SECTION**
3" = 1'-0"

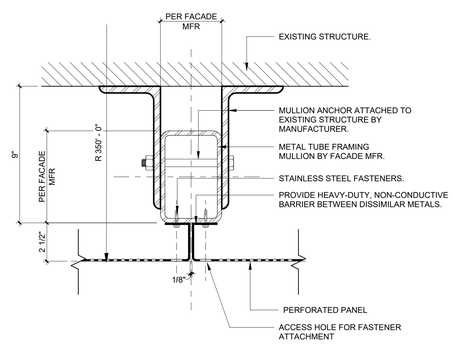

04 A-312 **TYPICAL PERFORATED PANEL ATTACHMENT**
3" = 1'-0"

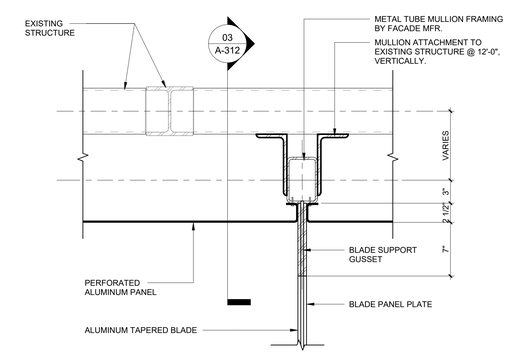

02 A-312 **SECTION DETAIL - PERFORATED PANEL**
1 1/2" = 1'-0"

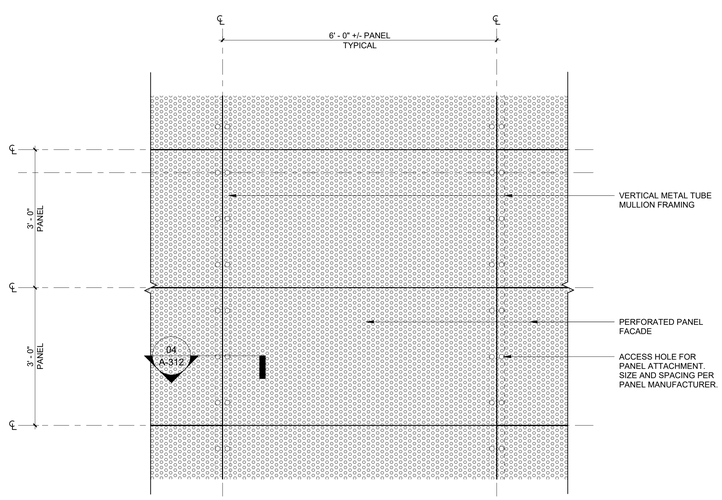

06 A-312 **TYPICAL FACADE PERFORATED PANEL**
3/4" = 1'-0"

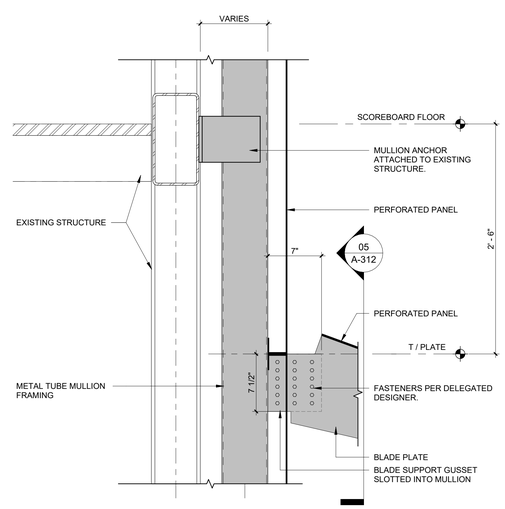

03 A-312 **SECTION DETAIL**
1 1/2" = 1'-0"

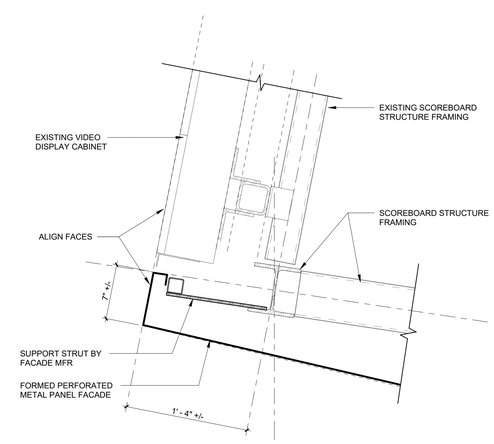

01 A-312 **SECTION DETAIL - PERFORATED PANEL**
1 1/2" = 1'-0"

NO.	DATE	DESCRIPTION
1.0	10-13-2026	ISSUE FOR BID

Hamilton County OHIO

SOUTH SCOREBOARD FACADE

1 Paycor Stadium Cincinnati, OH 45202

KZF DESIGN
Designing Better Futures

KZF DESIGN INC.
700 Broadway Street
Cincinnati, OH 45202

main 513.621.6211
kzf.com

DESIGNED	COMM. NO.
B. RAYMOND	8445.10
DRAWN	DATE
M. ALBERS	10-13-2026
CHECKED	PROJ. MGR.
J. THAMANN	C. MAI

FACADE PANEL AND BLADE DETAILS

DRAWING NUMBER ISSUE
A-312 1.0

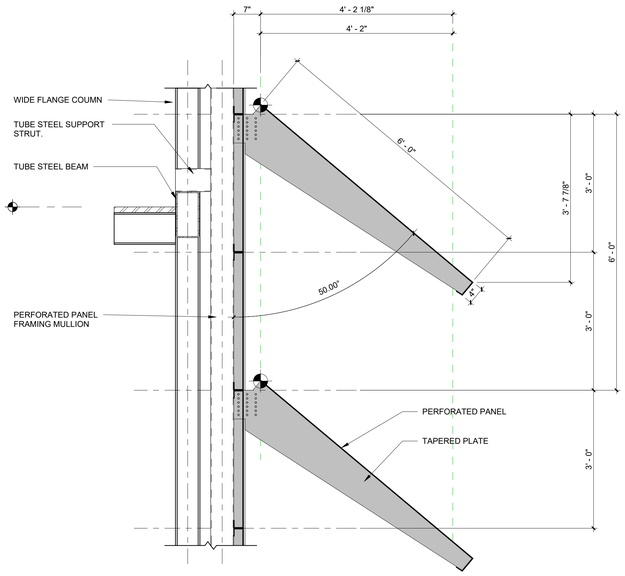

8 A-901 **SECTION DETAIL**
3/4" = 1'-0"

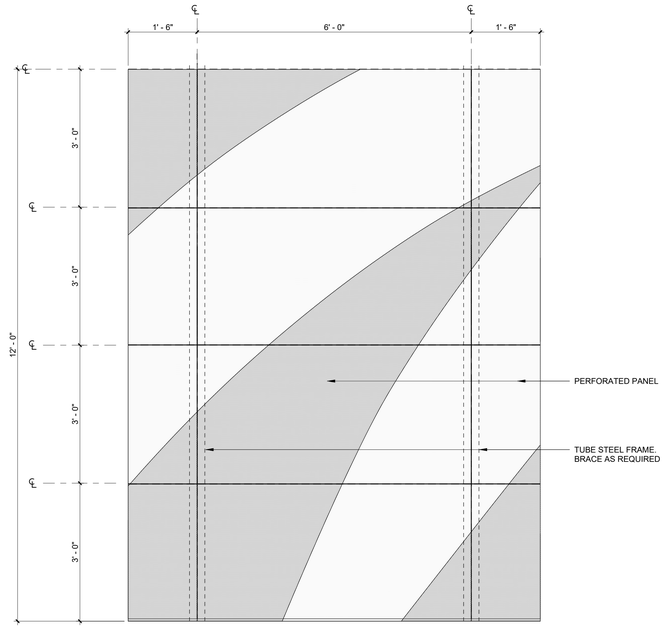

1 A-901 **TYPICAL PERF PANEL ELEVATION**
3/4" = 1'-0"

PERFORATION PATTERN A **PERFORATION PATTERN B**

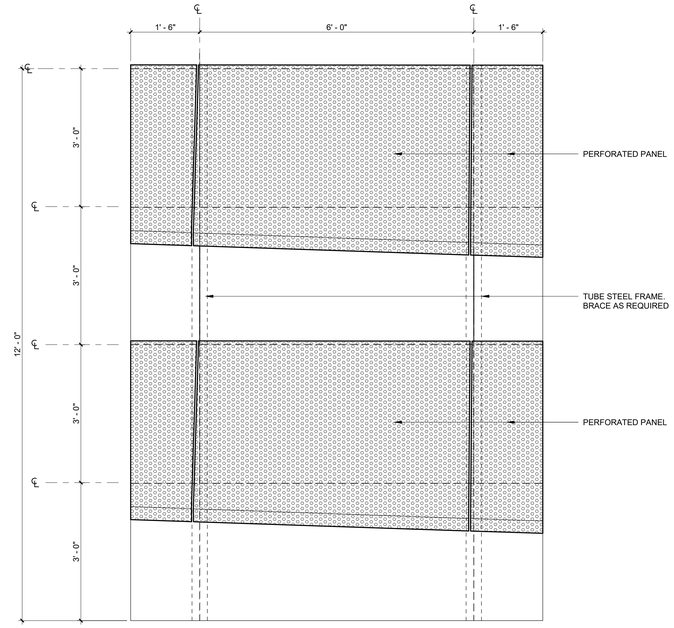

7 A-901 **TYPICAL BLADE ELEVATION**
3/4" = 1'-0"

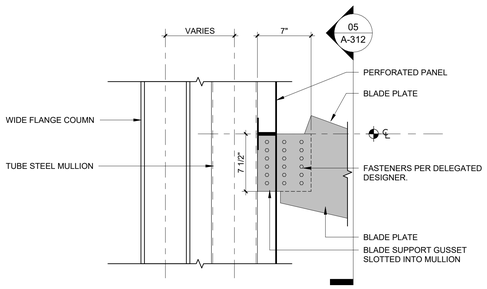

6 A-901 **SECTION DETAIL**
1 1/2" = 1'-0"

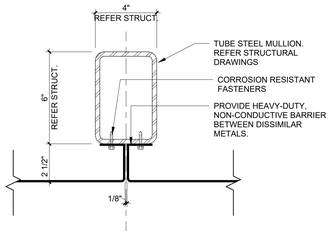

2 A-901 **TYPICAL PERFORATED PANEL ATTACHMENT**
3" = 1'-0"

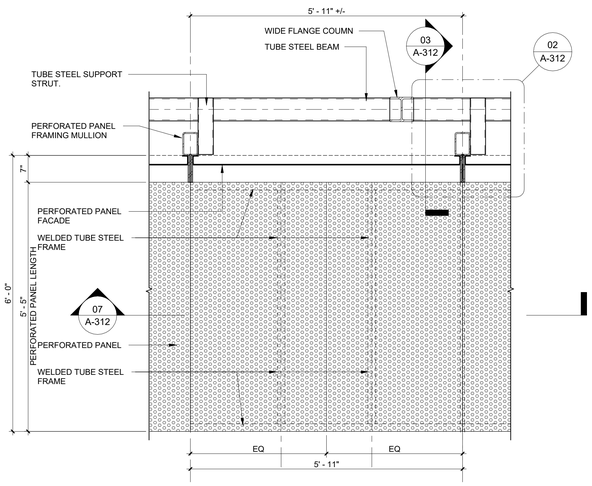

4 A-901 **TYPICAL BLADE PERFORATED PANEL PLAN**
3/4" = 1'-0"

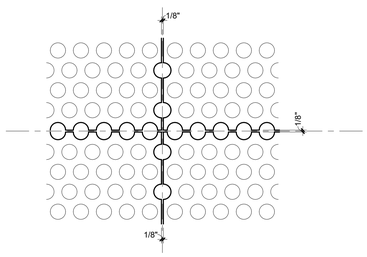

3 A-901 **TYPICAL CROSS SEAM/JOINT PERFORATION**
3" = 1'-0"

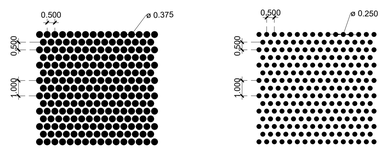

PATTERN A
40% OPEN AREA

0.375-INCH DIAMETER ROUND
0.50 INCH CENTERS, STAGGERED

PATTERN B
18% OPEN AREA

0.250-INCH DIAMETER ROUND
0.50 INCH CENTERS, STAGGERED

9 A-901 **PERFORATION PATTERNS**
3" = 1'-0"

GENERAL NOTES

1. MOCK-UP TO BE INSTALLED ON-SITE. COORDINATE WITH CONSTRUCTION MANAGER, ARCHITECT AND OWNER ON INSTALLATION LOCATION

NO.	DATE	DESCRIPTION
1.0	10-13-2026	ISSUE FOR BID

Hamilton County OHIO

SOUTH SCOREBOARD FACADE
1 Paycor Stadium Cincinnati, OH 45202

KZF DESIGN
Designing Better Futures

KZF DESIGN INC.
700 Broadway Street
Cincinnati, OH 45202

main 513.621.6211
kzf.com

DESIGNED	COMM. NO.
B. RAYMOND	8445.10
DRAWN	DATE
M. ALBERS	10-13-2026
CHECKED	PROJ. MGR.
J. THAMANN	C. MAI

PERFORATED PANEL MOCKUP

DRAWING NUMBER ISSUE
A-901 1.0